MCP4011/2/3/4

Low-Cost 64-Step Volatile Digital POT

Features

- Volatile Digital Potentiometer in SOT-23, SOIC, MSOP and DFN Packages
- 64 Taps: 63 Resistors with Taps to Terminal A and Terminal B
- Simple Up/$\overline{\text{Down}}$ (U/$\overline{\text{D}}$) Protocol
- Power-on Recall of Default Wiper Setting
  - Custom POR Wiper Settings Available (Contact Factory)
- Resistance Values: 2.1 kΩ, 5 kΩ, 10 kΩ or 50 kΩ
- Low Tempco:
  - Absolute (Rheostat): 50 ppm (0°C to 70°C Typ.)
  - Ratiometric (Potentiometer): 10 ppm (Typ.)
- Low Wiper Resistance: 75Ω (Typ.)
- High-Voltage Tolerant Digital Inputs: up to 12.5V
- Low-Power Operation: 1 µA Max Static Current
- Wide Operating Voltage Range:
  - 1.8V to 5.5V - Device Operation
  - 2.7V to 5.5V - Resistor Characteristics Specified
- Extended Temperature Range: –40°C to +125°C
- Wide Bandwidth (–3 dB) Operation:
  - 4 MHz (Typ.) for 2.1 kΩ Device

Description

The MCP4011/2/3/4 devices are volatile, 6-bit Digital Potentiometers that can be configured as either a potentiometer or rheostat. The wiper setting is controlled through a simple Up/$\overline{\text{Down}}$ (U/$\overline{\text{D}}$) serial interface.

Package Types

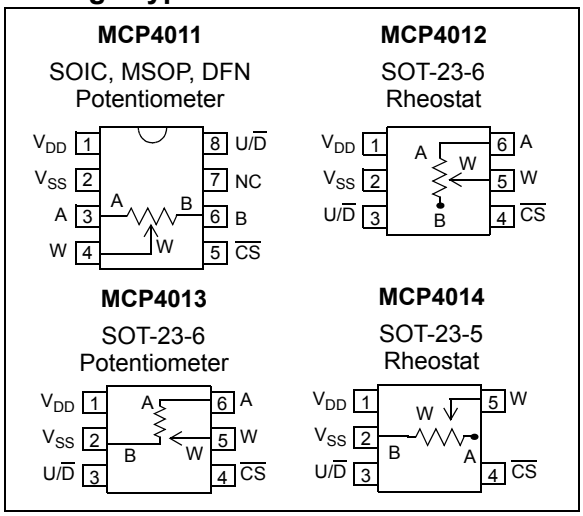

Block Diagram

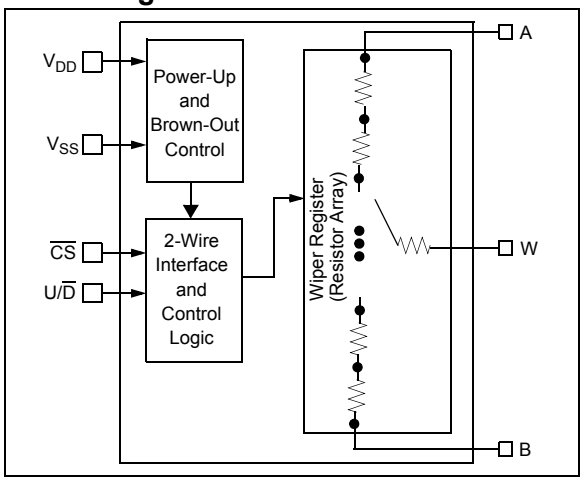

Device Features

Device	Wiper Configuration	Memory Type	POR Wiper Setting	Resistance (typical)		# of Steps	V_{DD} Operating Range (2)	Control Interface	WiperLock™ Technology
				Options (kΩ)	Wiper (Ω)				
MCP4011	Potentiometer (1)	RAM	Mid-Scale	2.1, 5.0, 10.0, 50.0	75	64	1.8V to 5.5V	U/$\overline{\text{D}}$	No
MCP4012	Rheostat	RAM	Mid-Scale	2.1, 5.0, 10.0, 50.0	75	64	1.8V to 5.5V	U/$\overline{\text{D}}$	No
MCP4013	Potentiometer	RAM	Mid-Scale	2.1, 5.0, 10.0, 50.0	75	64	1.8V to 5.5V	U/$\overline{\text{D}}$	No
MCP4014	Rheostat	RAM	Mid-Scale	2.1, 5.0, 10.0, 50.0	75	64	1.8V to 5.5V	U/$\overline{\text{D}}$	No

Note 1: Floating either terminal (A or B) allows the device to be used in Rheostat mode.

2: Analog characteristics (resistor) tested from 2.7V to 5.5V.

© 2006-2017 Microchip Technology Inc.

1.0 ELECTRICAL CHARACTERISTICS

Absolute Maximum Ratings †

V_{DD} 6.5V

$\overline{CS}$ and U/$\overline{D}$ inputs w.r.t V_{SS} ..... –0.3V to 12.5V

A,B and W terminals w.r.t V_{SS} ..... –0.3V to V_{DD} + 0.3V

Current at Input Pins .....±10 mA

Current at Supply Pins .....±10 mA

Current at Potentiometer Pins .....±2.5 mA

Storage temperature .....–65°C to +150°C

Ambient temp. with power applied .....–55°C to +125°C

ESD protection on all pins .....≥ 4 kV (HBM), ≥ 400V (MM)

Maximum Junction Temperature (T_J) .....+150°C

† Notice: Stresses above those listed under “Maximum Ratings” may cause permanent damage to the device. This is a stress rating only and functional operation of the device at those or any other conditions above those indicated in the operational listings of this specification is not implied. Exposure to maximum rating conditions for extended periods may affect device reliability.

AC/DC CHARACTERISTICS

Electrical Specifications: Unless otherwise indicated, all parameters apply across the specified operating ranges. T_A = –40°C to +125°C, 2.1 kΩ, 5 kΩ, 10 kΩ and 50 kΩ devices. Typical specifications represent values for V_{DD} = 2.7V to 5.5V, V_{SS} = 0V, T_A = +25°C.

Parameters	Sym.	Min.	Typ.	Max.	Units	Conditions
Operating Voltage Range	V_{DD}	2.7	—	5.5	V	
	V_{DD}	—	1.8	—	V	V_{DD} = 1.8V, $\overline{CS}$:V_{IHH} = 8.5V, V_{IH} = 1.8V, V_{IL} = 0V, U/D:V_{IH} = 1.8V, V_{IL} = 0V
$\overline{CS}$ Input Voltage	V_{CS}	V_{SS}	—	12.5	V	The $\overline{CS}$ pin will be at one of three input levels (V_{IL}, V_{IH} or V_{IHH}). (**Note 6**)
Supply Current	I_{DD}	—	45	—	µA	5.5V, $\overline{CS}$ = V_{SS}, $f_{U/D}$ = 1 MHz
		—	15	—	µA	2.7V, $\overline{CS}$ = V_{SS}, $f_{U/D}$ = 1 MHz
		—	0.3	1	µA	Serial Interface Inactive ($\overline{CS}$ = V_{IH}, U/$\overline{D}$ = V_{IH})
Resistance (± 20%)	R_{AB}	1.68	2.1	2.52	kΩ	–202 devices (**Note 1**)
		4.0	5	6.0	kΩ	–502 devices (**Note 1**)
		8.0	10	12.0	kΩ	–103 devices (**Note 1**)
		40.0	50	60.0	kΩ	–503 devices (**Note 1**)

Note 1: Resistance is defined as the resistance between terminal A to terminal B.

2: INL and DNL are measured at V_W with V_A = V_{DD} and V_B = V_{SS}. (–202 devices V_A = 4V).

3: **MCP4011/13** only, test conditions are: I_W = 1.9 mA, code = 00h.

4: **MCP4012/14** only, test conditions are:

Device Resistance	Current at Voltage		Comments
	5.5V	2.7V	
2.1 kΩ	2.25 mA	1.1 mA	**MCP4012** includes V_{WZSE} **MCP4014** includes V_{WFSE}
5 kΩ	1.4 mA	450 µA	
10 kΩ	450 µA	210 µA	
50 kΩ	90 µA	40 µA	

5: Resistor terminals A, W and B’s polarity with respect to each other is not restricted.

6: This specification by design.

7: Nonlinearity is affected by wiper resistance (R_W), which changes significantly over voltage and temperature. See **Section 6.0, "Resistor"** for additional information.

8: For voltages below 2.7V, refer to **Section 2.0, "Typical Performance Curves"**.

9: The **MCP4011** is externally connected to match the configurations of the **MCP4012** and **MCP4014** and then tested.

© 2006-2017 Microchip Technology Inc.

AC/DC CHARACTERISTICS (CONTINUED)

Electrical Specifications: Unless otherwise indicated, all parameters apply across the specified operating ranges. T_A = –40°C to +125°C, 2.1 kΩ, 5 kΩ, 10 kΩ and 50 kΩ devices. Typical specifications represent values for V_{DD} = 2.7V to 5.5V, V_{SS} = 0V, T_A = +25°C.

Parameters	Sym.	Min.	Typ.	Max.	Units	Conditions
Resolution	N		64		Taps	No Missing Codes
Step Resistance	R_S	—	R_{AB} / 63	—	Ω	**Note 6**
Wiper Resistance (**Note 3, Note 4**)	R_W	—	70	125	Ω	5.5V
		—	70	325	Ω	2.7V
Nominal Resistance Tempco	ΔR/ΔT	—	50	—	ppm/°C	T_A = -20°C to +70°C
		—	100	—	ppm/°C	T_A = -40°C to +85°C
		—	150	—	ppm/°C	T_A = -40°C to +125°C
Ratiometeric Tempco	ΔV_{WA}/ ΔT	—	10	—	ppm/°C	**MCP4011** and **MCP4013** only, code = 1Fh
Full-Scale Error (**MCP4011/13** only)	V_{WFSE}	-0.5	-0.1	+0.5	LSb	Code 3Fh, 2.7V ≤ V_{DD} ≤ 5.5V
Zero-Scale Error (**MCP4011/13** only)	V_{WZSE}	-0.5	+0.1	+0.5	LSb	Code 00h, 2.7V ≤ V_{DD} ≤ 5.5V
Monotonicity	N		Yes		Bits	
Resistor Terminal Input Voltage Range (Terminals A, B and W)	V_A,V_W, V_B	Vss	—	V_{DD}	V	**Note 5**, **Note 6**
Current through A, W or B	I_W	—	—	2.5	mA	**Note 6**
Leakage current into A, W or B	I_{WL}	—	100	—	nA	**MCP4011** A = W = B = V_{SS}
		—	100	—	nA	**MCP4012/13** A = W = V_{SS}
		—	100	—	nA	**MCP4014** W = V_{SS}
Capacitance (P_A)	C_{AW}	—	75	—	pF	f =1 MHz, code = 1Fh
Capacitance (P_w)	C_W	—	120	—	pF	f =1 MHz, code = 1Fh
Capacitance (P_B)	C_{BW}	—	75	—	pF	f =1 MHz, code = 1Fh
Bandwidth -3 dB	BW	—	4	—	MHz	-202 devices; Code = 1F, output load = 30 pF
		—	2	—	MHz	-502 devices
		—	1	—	MHz	-103 devices
		—	200	—	kHz	-503 devices

Note 1: Resistance is defined as the resistance between terminal A to terminal B.

2: INL and DNL are measured at V_W with V_A = V_{DD} and V_B = V_{SS}. (–202 devices V_A = 4V).

3: **MCP4011/13** only, test conditions are: I_W = 1.9 mA, code = 00h.

4: **MCP4012/14** only, test conditions are:

Device Resistance	Current at Voltage		Comments
	5.5V	2.7V	
2.1 kΩ	2.25 mA	1.1 mA	**MCP4012** includes V_{WZSE} **MCP4014** includes V_{WFSE}
5 kΩ	1.4 mA	450 µA	
10 kΩ	450 µA	210 µA	
50 kΩ	90 µA	40 µA	

5: Resistor terminals A, W and B's polarity with respect to each other is not restricted.

6: This specification by design.

7: Nonlinearity is affected by wiper resistance (R_W), which changes significantly over voltage and temperature. See **Section 6.0, "Resistor"** for additional information.

8: For voltages below 2.7V, refer to **Section 2.0, "Typical Performance Curves"**.

9: The **MCP4011** is externally connected to match the configurations of the **MCP4012** and **MCP4014** and then tested.

© 2006-2017 Microchip Technology Inc.

AC/DC CHARACTERISTICS (CONTINUED)

Electrical Specifications: Unless otherwise indicated, all parameters apply across the specified operating ranges. T_A = –40°C to +125°C, 2.1 kΩ, 5 kΩ, 10 kΩ and 50 kΩ devices. Typical specifications represent values for V_{DD} = 2.7V to 5.5V, V_{SS} = 0V, T_A = +25°C.

Parameters	Sym.	Min.	Typ.	Max.	Units	Conditions	
Potentiometer Integral Nonlinearity	INL	–0.5	±0.25	+0.5	LSb	**MCP4011/13** only (**Note 2**)	
Potentiometer Differential Nonlinearity	DNL	–0.5	±0.25	+0.5	LSb	**MCP4011/13** only (**Note 2**)	
Rheostat Integral Nonlinearity **MCP4011** (**Note 4, Note 9**) **MCP4012** and **MCP4014** (**Note 4**)	R-INL	–0.5	±0.25	+0.5	LSb	–202 devices (2.1 kΩ)	5.5V
		–8.5	+4.5	+8.5	LSb		2.7V (**Note 7**)
		See **Section 2.0**			LSb		1.8V (**Note 7, Note 8**)
		–0.5	±0.25	+0.5	LSb	–502 devices (5 kΩ)	5.5V
		–5.5	+2.5	+5.5	LSb		2.7V (**Note 7**)
		See **Section 2.0**			LSb		1.8V (**Note 7, Note 8**)
		–0.5	±0.25	+0.5	LSb	–103 devices (10 kΩ)	5.5V
		–3	+1	+3	LSb		2.7V (**Note 7**)
		See **Section 2.0**			LSb		1.8V (**Note 7, Note 8**)
		–0.5	±0.25	+0.5	LSb	–503 devices (50 kΩ)	5.5V
		–1	+0.25	+1	LSb		2.7V (**Note 7**)
		See **Section 2.0**			LSb		1.8V (**Note 7, Note 8**)
Rheostat Differential Nonlinearity **MCP4011** (**Note 4, Note 9**) **MCP4012** and **MCP4014** (**Note 4**)	R-DNL	–0.5	±0.25	+0.5	LSb	–202 devices (2.1 kΩ)	5.5V
		–1	+0.5	+2	LSb		2.7V (**Note 7**)
		See **Section 2.0**			LSb		1.8V (**Note 7, Note 8**)
		–0.5	±0.25	+0.5	LSb	–502 devices (5 kΩ)	5.5V
		–1	+0.25	+1.25	LSb		2.7V (**Note 7**)
		See **Section 2.0**			LSb		1.8V (**Note 7, Note 8**)
		–0.5	±0.25	+0.5	LSb	–103 devices (10 kΩ)	5.5V
		–1	0	+1	LSb		2.7V (**Note 7**)
		See **Section 2.0**			LSb		1.8V (**Note 7, Note 8**)
		–0.5	±0.25	+0.5	LSb	–503 devices (50 kΩ)	5.5V
		–0.5	0	+0.5	LSb		2.7V (**Note 7**)
		See **Section 2.0**			LSb		1.8V (**Note 7, Note 8**)

Note 1: Resistance is defined as the resistance between terminal A to terminal B.

2: INL and DNL are measured at V_W with $V_A = V_{DD}$ and $V_B = V_{SS}$. (–202 devices V_A = 4V).

3: **MCP4011/13** only, test conditions are: I_W = 1.9 mA, code = 00h.

4: **MCP4012/14** only, test conditions are:

Device Resistance	Current at Voltage		Comments
	5.5V	2.7V	
2.1 kΩ	2.25 mA	1.1 mA	**MCP4012** includes V_{WZSE} **MCP4014** includes V_{WFSE}
5 kΩ	1.4 mA	450 µA	
10 kΩ	450 µA	210 µA	
50 kΩ	90 µA	40 µA	

5: Resistor terminals A, W and B's polarity with respect to each other is not restricted.

6: This specification by design.

7: Nonlinearity is affected by wiper resistance (R_W), which changes significantly over voltage and temperature. See **Section 6.0, "Resistor"** for additional information.

8: For voltages below 2.7V, refer to **Section 2.0, "Typical Performance Curves"**.

9: The **MCP4011** is externally connected to match the configurations of the **MCP4012** and **MCP4014** and then tested.

© 2006-2017 Microchip Technology Inc.

AC/DC CHARACTERISTICS (CONTINUED)

Electrical Specifications: Unless otherwise indicated, all parameters apply across the specified operating ranges. T_A = –40°C to +125°C, 2.1 kΩ, 5 kΩ, 10 kΩ and 50 kΩ devices. Typical specifications represent values for V_{DD} = 2.7V to 5.5V, V_{SS} = 0V, T_A = +25°C.

Parameters	Sym.	Min.	Typ.	Max.	Units	Conditions
Digital Inputs/Outputs ($\overline{CS}$, U/$\overline{D}$)						
Input High Voltage	V_{IH}	0.7 V_{DD}	—	—	V	
Input Low Voltage	V_{IL}	—	—	0.3 V_{DD}	V	
High-Voltage Input Entry Voltage (Threshold for WiperLock Technology)	V_{IHH}	8.5(9)	—	12.5(6)	V	+7°C to +125°C
		9.0	—	12.5(6)	V	–40°C to +125°C
High-Voltage Input Exit Voltage	V_{IHH}	—	—	V_{DD}+0.8(6)	V	
$\overline{CS}$ Pull-Up/Pull-Down Resistance	R_{CS}	—	16	—	kΩ	V_{DD} = 5.5V, V_{CS} = 3V
$\overline{CS}$ Weak Pull-Up/Pull-Down Current	I_{PU}	—	170	—	µA	V_{DD} = 5.5V, V_{CS} = 3V
Input Leakage Current	I_{IL}	–1	—	1	µA	V_{IN} = V_{DD}
$\overline{CS}$ and U/$\overline{D}$ Pin Capacitance	C_{IN}, C_{OUT}	—	10	—	pF	f_C = 1 MHz, $V_{DD} \geq$ 2.7V
RAM (Wiper) Value						
Value Range	N	0h	—	3Fh	hex	
Default POR Setting	N	1Fh			hex	
Power Requirements						
Power Supply Sensitivity (**MCP4011** and **MCP4013** only)	PSS	—	0.0015	0.0035	%/%	V_{DD} = 4.5V to 5.5V, V_A = 4.5V, Code = 1Fh
		—	0.0015	0.0035	%/%	V_{DD} = 2.7V to 4.5V, V_A = 2.7V, Code = 1Fh

Note 1: Resistance is defined as the resistance between terminal A to terminal B.

2: INL and DNL are measured at V_W with V_A = V_{DD} and V_B = V_{SS}. (–202 devices V_A = 4V).

3: **MCP4011/13** only, test conditions are: I_W = 1.9 mA, code = 00h.

4: **MCP4012/14** only, test conditions are:

Device Resistance	Current at Voltage		Comments
	5.5V	2.7V	
2.1 kΩ	2.25 mA	1.1 mA	**MCP4012** includes V_{WZSE} **MCP4014** includes V_{WFSE}
5 kΩ	1.4 mA	450 µA	
10 kΩ	450 µA	210 µA	
50 kΩ	90 µA	40 µA	

5: Resistor terminals A, W and B's polarity with respect to each other is not restricted.

6: This specification by design.

7: Nonlinearity is affected by wiper resistance (R_W), which changes significantly over voltage and temperature. See **Section 6.0, "Resistor"** for additional information.

8: For voltages below 2.7V, refer to **Section 2.0, "Typical Performance Curves"**.

9: The **MCP4011** is externally connected to match the configurations of the **MCP4012** and **MCP4014** and then tested.

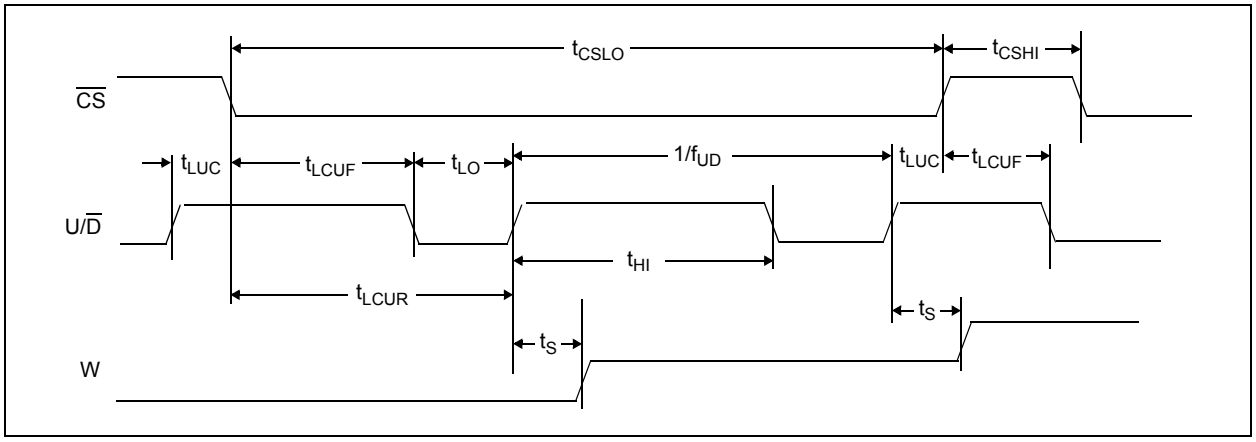

FIGURE 1-1: *Increment Timing Waveform.*

SERIAL TIMING CHARACTERISTICS

Electrical Specifications: Unless otherwise noted, all parameters apply across the specified operating ranges. Extended (E): V_{DD} = +1.8V to 5.5V, T_A = -40°C to +125°C.

Parameters	Sym.	Min.	Typ.	Max.	Units	Conditions
$\overline{CS}$ Low Time	t_{CSLO}	5	—	—	µs	
$\overline{CS}$ High Time	t_{CSHI}	500	—	—	ns	2.7V ≤ V_{DD} ≤ 5.5V
		—	—	—	ns	1.8V ≤ V_{DD} < 2.7V
U/$\overline{D}$ to $\overline{CS}$ Hold Time	t_{LUC}	500	—	—	ns	2.7V ≤ V_{DD} ≤ 5.5V
		750	—	—	ns	1.8V ≤ V_{DD} < 2.7V
$\overline{CS}$ to U/$\overline{D}$ Low Setup Time	t_{LCUF}	500	—	—	ns	
$\overline{CS}$ to U/$\overline{D}$ High Setup Time	t_{LCUR}	3	—	—	µs	
U/$\overline{D}$ High Time	t_{HI}	500	—	—	ns	
U/$\overline{D}$ Low Time	t_{LO}	500	—	—	ns	
Up/$\overline{Down}$ Toggle Frequency	f_{UD}	—	—	1	MHz	
Wiper Settling Time	t_S	0.5	—	—	µs	2.1 kΩ, C_L = 100 pF
		1	—	—	µs	5 kΩ, C_L = 100 pF
		2	—	—	µs	10 kΩ, C_L = 100 pF
		10	5	—	µs	50 kΩ, C_L = 100 pF
Wiper Response on Power-Up	t_{PU}	—	200	—	ns	

© 2006-2017 Microchip Technology Inc.

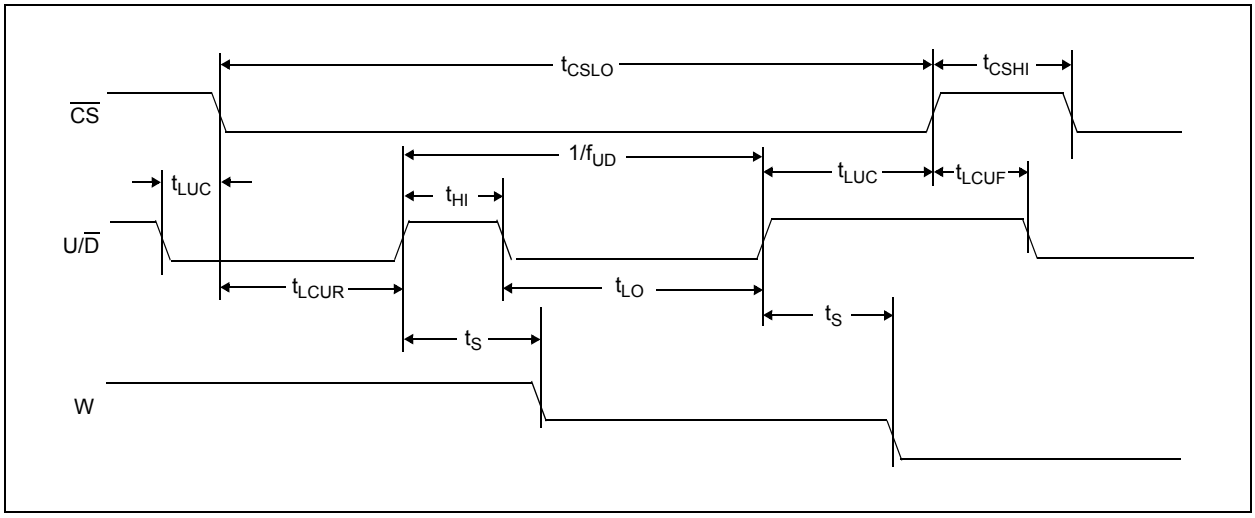

FIGURE 1-2: *Decrement Timing Waveform.*

SERIAL TIMING CHARACTERISTICS

Electrical Specifications: Unless otherwise noted, all parameters apply across the specified operating ranges. Extended (E): V_{DD} = +1.8V to 5.5V, T_A = –40°C to +125°C.

Parameters	Sym.	Min.	Typ.	Max.	Units	Conditions
$\overline{CS}$ Low Time	t_{CSLO}	5	—	—	µs	
$\overline{CS}$ High Time	t_{CSHI}	500	—	—	ns	2.7V ≤ V_{DD} ≤ 5.5V
		—	—	—	ns	1.8V ≤ V_{DD} < 2.7V
U/$\overline{D}$ to $\overline{CS}$ Hold Time	t_{LUC}	500	—	—	ns	2.7V ≤ V_{DD} ≤ 5.5V
		750	—	—	ns	1.8V ≤ V_{DD} < 2.7V
$\overline{CS}$ to U/$\overline{D}$ Low Setup Time	t_{LCUF}	500	—	—	ns	
$\overline{CS}$ to U/$\overline{D}$ High Setup Time	t_{LCUR}	3	—	—	µs	
U/$\overline{D}$ High Time	t_{HI}	500	—	—	ns	
U/$\overline{D}$ Low Time	t_{LO}	500	—	—	ns	
Up/$\overline{Down}$ Toggle Frequency	f_{UD}	—	—	1	MHz	
Wiper Settling Time	t_S	0.5	—	—	µs	2.1 kΩ, C_L = 100 pF
		1	—	—	µs	5 kΩ, C_L = 100 pF
		2	—	—	µs	10 kΩ, C_L = 100 pF
		10	5	—	µs	50 kΩ, C_L = 100 pF
Wiper Response on Power-up	t_{PU}	—	200	—	ns	

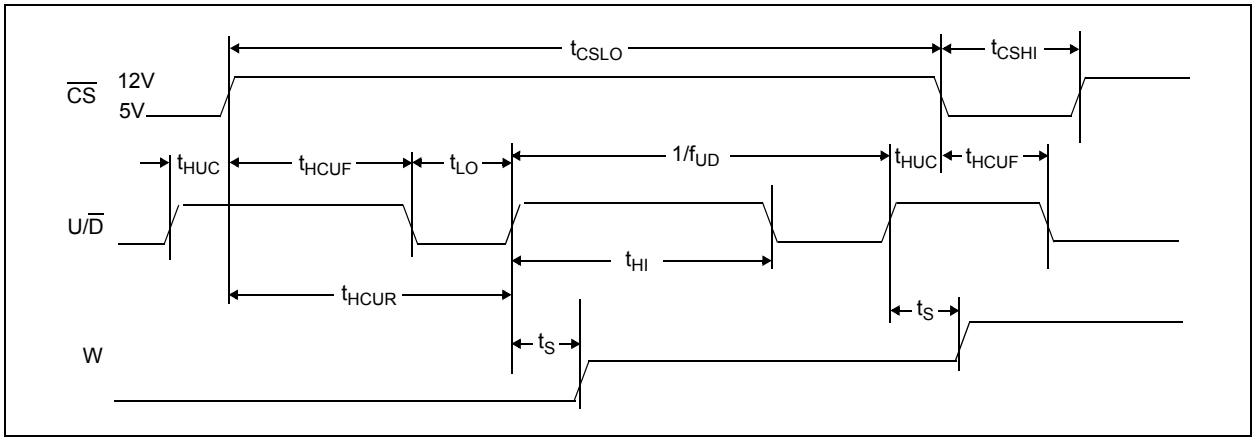

FIGURE 1-3: *High-Voltage Increment Timing Waveform.*

SERIAL TIMING CHARACTERISTICS

Electrical Specifications: Unless otherwise noted, all parameters apply across the specified operating ranges. Extended (E): V_{DD} = +1.8V to 5.5V, T_A = –40°C to +125°C.

Parameters	Sym.	Min.	Typ.	Max.	Units	Conditions
$\overline{CS}$ Low Time	t_{CSLO}	5	—	—	µs	
$\overline{CS}$ High Time	t_{CSHI}	500	—	—	ns	2.7V ≤ V_{DD} ≤ 5.5V
		—	—	—	ns	1.8V ≤ V_{DD} < 2.7V
U/$\overline{D}$ High Time	t_{HI}	500	—	—	ns	
U/$\overline{D}$ Low Time	t_{LO}	500	—	—	ns	
Up/$\overline{Down}$ Toggle Frequency	f_{UD}	—	—	1	MHz	
HV U/$\overline{D}$ to $\overline{CS}$ Hold Time	t_{HUC}	1.5	—	—	µs	
HV $\overline{CS}$ to U/$\overline{D}$ Low Setup Time	t_{HCUF}	8	—	—	µs	
HV $\overline{CS}$ to U/$\overline{D}$ High Setup Time	t_{HCUR}	4.5	—	—	µs	
Wiper Settling Time	t_S	0.5	—	—	µs	2.1 kΩ, C_L = 100 pF
		1	—	—	µs	5 kΩ, C_L = 100 pF
		2	—	—	µs	10 kΩ, C_L = 100 pF
		10	5	—	µs	50 kΩ, C_L = 100 pF
Wiper Response on Power-Up	t_{PU}	—	200	—	ns	

© 2006-2017 Microchip Technology Inc.

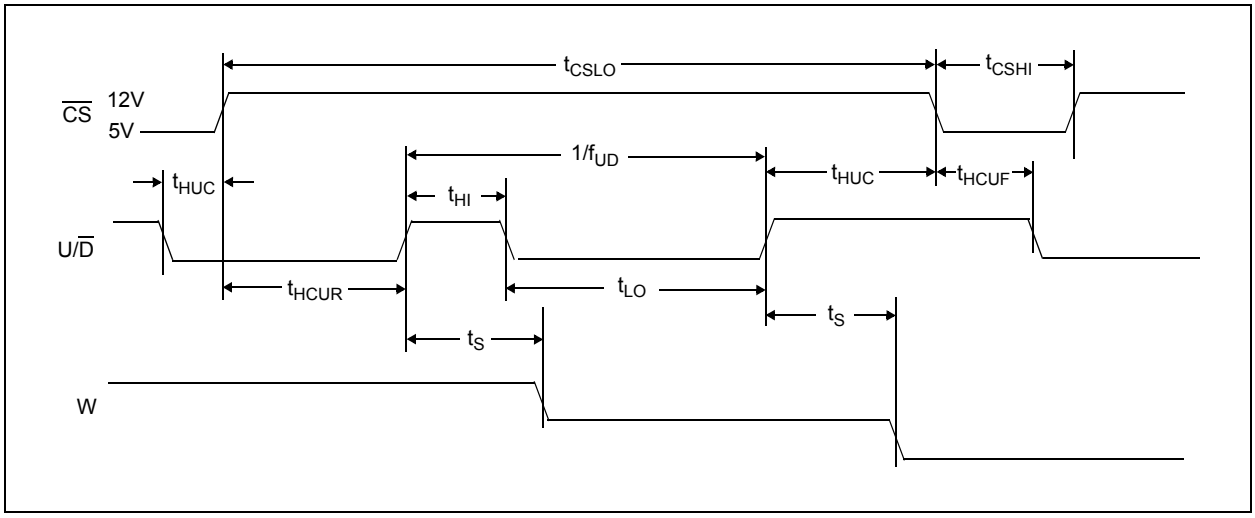

FIGURE 1-4: *High-Voltage Decrement Timing Waveform.*

SERIAL TIMING CHARACTERISTICS

Electrical Specifications: Unless otherwise noted, all parameters apply across the specified operating ranges. Extended (E): V_{DD} = +1.8V to 5.5V, T_A = -40°C to +125°C.

Parameters	Sym.	Min.	Typ.	Max.	Units	Conditions
$\overline{CS}$ Low Time	t_{CSLO}	5	—	—	µs	
$\overline{CS}$ High Time	t_{CSHI}	500	—	—	ns	2.7V ≤ V_{DD} ≤ 5.5V
		—	—	—	ns	1.8V ≤ V_{DD} < 2.7V
U/$\overline{D}$ High Time	t_{HI}	500	—	—	ns	
U/$\overline{D}$ Low Time	t_{LO}	500	—	—	ns	
Up/$\overline{Down}$ Toggle Frequency	f_{UD}	—	—	1	MHz	
HV U/$\overline{D}$ to $\overline{CS}$ Hold Time	t_{HUC}	1.5	—	—	µs	
HV $\overline{CS}$ to U/$\overline{D}$ Low Setup Time	t_{HCUF}	8	—	—	µs	
HV $\overline{CS}$ to U/$\overline{D}$ High Setup Time	t_{HCUR}	4.5	—	—	µs	
Wiper Settling Time	t_S	0.5	—	—	µs	2.1 kΩ, C_L = 100 pF
		1	—	—	µs	5 kΩ, C_L = 100 pF
		2	—	—	µs	10 kΩ, C_L = 100 pF
		10	5	—	µs	50 kΩ, C_L = 100 pF
Wiper Response on Power-up	t_{PU}	—	200	—	ns	

TEMPERATURE CHARACTERISTICS

Electrical Specifications: Unless otherwise indicated, V_{DD} = +2.7V to +5.5V, V_{SS} = GND.						
Parameters	**Sym.**	**Min.**	**Typ.**	**Max.**	**Units**	**Conditions**
Temperature Ranges						
Specified Temperature Range	T_A	–40	—	+125	°C	
Operating Temperature Range	T_A	–40	—	+125	°C	
Storage Temperature Range	T_A	–65	—	+150	°C	
Thermal Package Resistances						
Thermal Resistance, 5L-SOT-23	θ_{JA}	—	70	—	°C/W	
Thermal Resistance, 6L-SOT-23	θ_{JA}	—	120	—	°C/W	
Thermal Resistance, 8L-DFN (2x3)	θ_{JA}	—	85	—	°C/W	
Thermal Resistance, 8L-MSOP	θ_{JA}	—	206	—	°C/W	
Thermal Resistance, 8L-SOIC	θ_{JA}	—	163	—	°C/W	

© 2006-2017 Microchip Technology Inc.

2.0 TYPICAL PERFORMANCE CURVES

Note: The graphs and tables provided following this note are a statistical summary based on a limited number of samples and are provided for informational purposes only. The performance characteristics listed herein are not tested or guaranteed. In some graphs or tables, the data presented may be outside the specified operating range (e.g., outside specified power supply range) and therefore outside the warranted range.

Note: Unless otherwise indicated, T_A = +25°C, V_{DD} = 5V, V_{SS} = 0V.

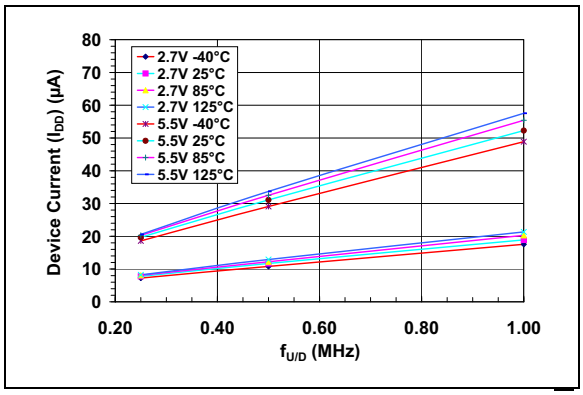

FIGURE 2-1: *Device Current (I_{DD}) vs. U/$\overline{D}$ Frequency ($f_{U/D}$) and Ambient Temperature (V_{DD} = 2.7V and 5.5V).*

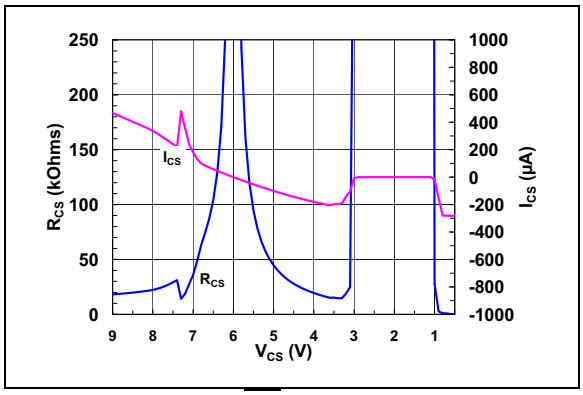

FIGURE 2-3: *$\overline{CS}$ Pull-Up/Pull-Down Resistance (R_{CS}) and Current (I_{CS}) vs. $\overline{CS}$ Input Voltage (V_{CS}) (V_{DD} = 5.5V).*

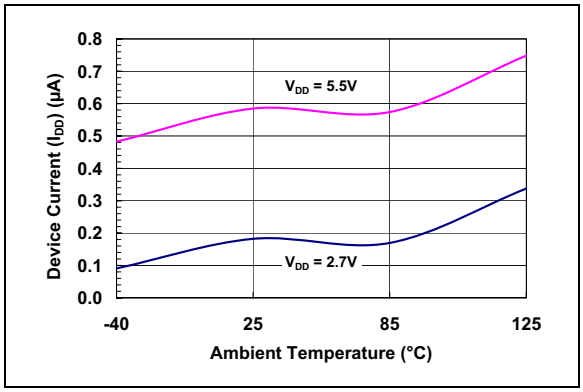

FIGURE 2-2: *Device Current (I_{SHDN}) and V_{DD}. ($\overline{CS}$ = V_{DD}) vs. Ambient Temperature.*

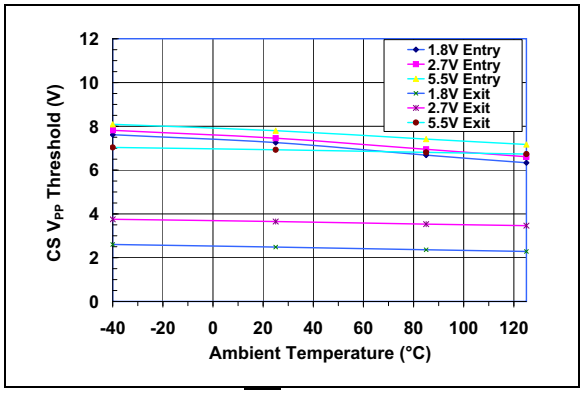

FIGURE 2-4: *$\overline{CS}$ High Input Entry/Exit Threshold vs. Ambient Temperature and V_{DD}.*

Note: Unless otherwise indicated, T_A = +25°C, V_{DD} = 5V, V_{SS} = 0V.

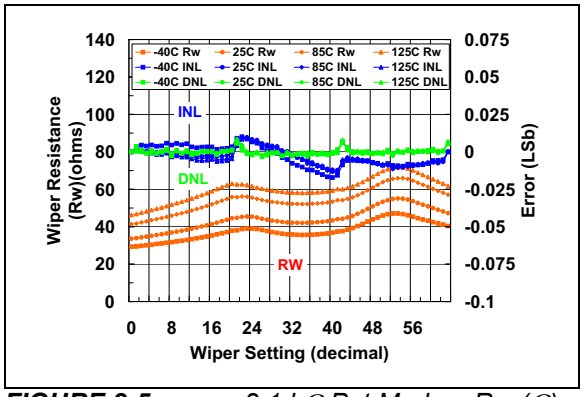

FIGURE 2-5: *2.1 kΩ Pot Mode – R_W (Ω), INL (LSb), DNL (LSb) vs. Wiper Setting and Ambient Temperature (V_{DD} = 5.5V).*

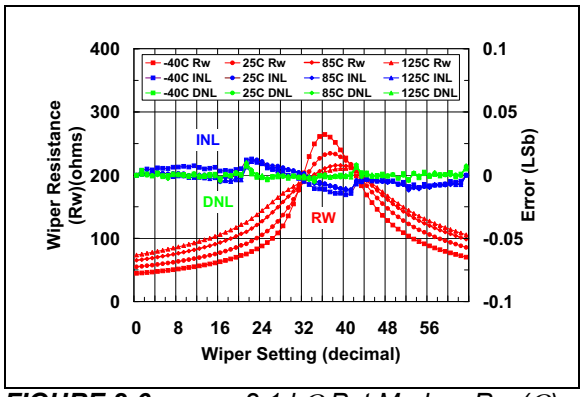

FIGURE 2-6: *2.1 kΩ Pot Mode – R_W (Ω), INL (LSb), DNL (LSb) vs. Wiper Setting and Ambient Temperature (V_{DD} = 2.7V).*

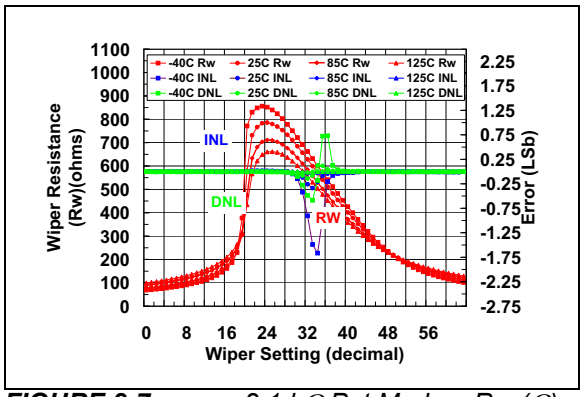

FIGURE 2-7: *2.1 kΩ Pot Mode – R_W (Ω), INL (LSb), DNL (LSb) vs. Wiper Setting and Ambient Temperature (V_{DD} = 1.8V).*

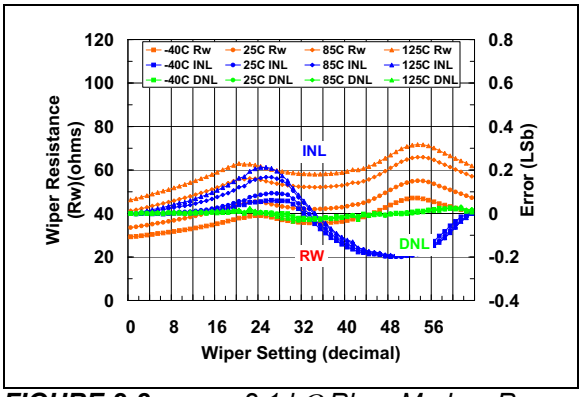

FIGURE 2-8: *2.1 kΩ Rheo Mode – R_W (Ω), INL (LSb), DNL (LSb) vs. Wiper Setting and Ambient Temperature (V_{DD} = 5.5V).*

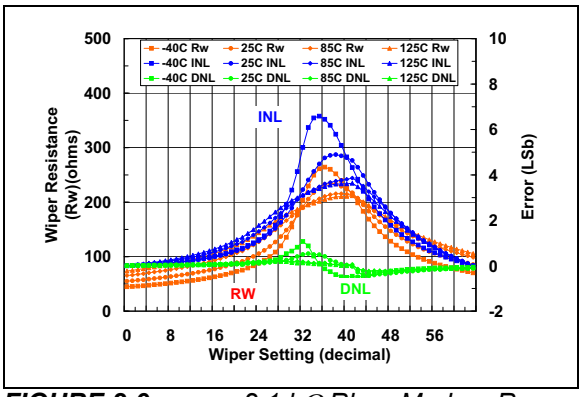

FIGURE 2-9: *2.1 kΩ Rheo Mode – R_W (Ω), INL (LSb), DNL (LSb) vs. Wiper Setting and Ambient Temperature (V_{DD} = 2.7V).*

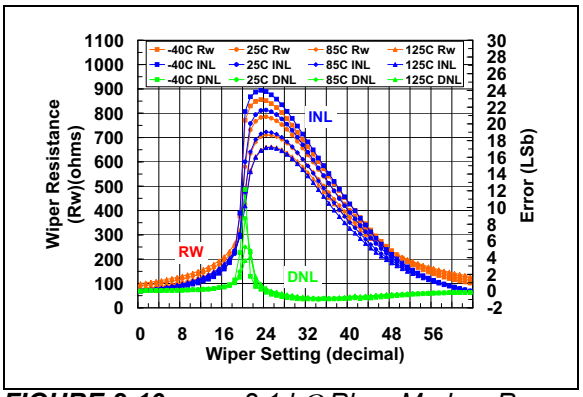

FIGURE 2-10: *2.1 kΩ Rheo Mode – R_W (Ω), INL (LSb), DNL (LSb) vs. Wiper Setting and Ambient Temperature (V_{DD} = 1.8V).*

© 2006-2017 Microchip Technology Inc.

Note: Unless otherwise indicated, T_A = +25°C, V_{DD} = 5V, V_{SS} = 0V.

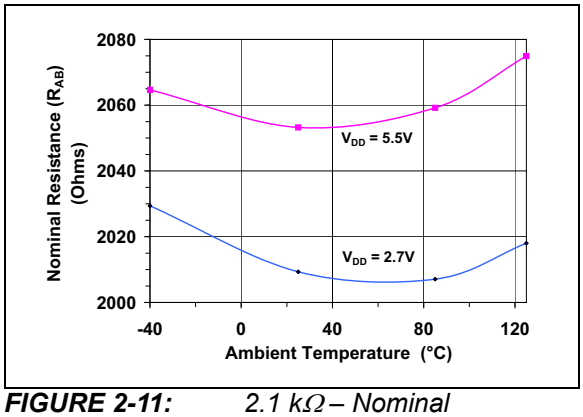

FIGURE 2-11: *2.1 kΩ – Nominal Resistance (Ω) vs. Ambient Temperature and V_{DD}.*

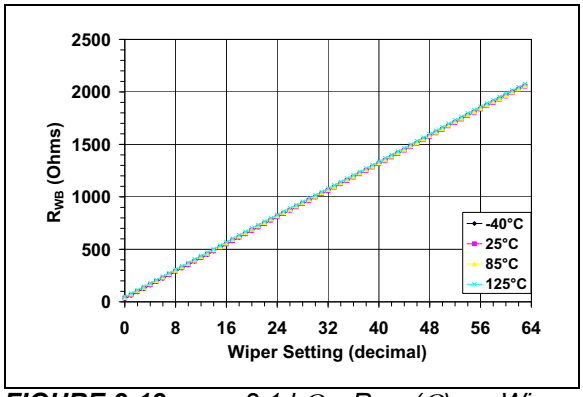

FIGURE 2-12: *2.1 kΩ – R_{WB} (Ω) vs. Wiper Setting and Ambient Temperature.*

Note: Unless otherwise indicated, T_A = +25°C, V_{DD} = 5V, V_{SS} = 0V.

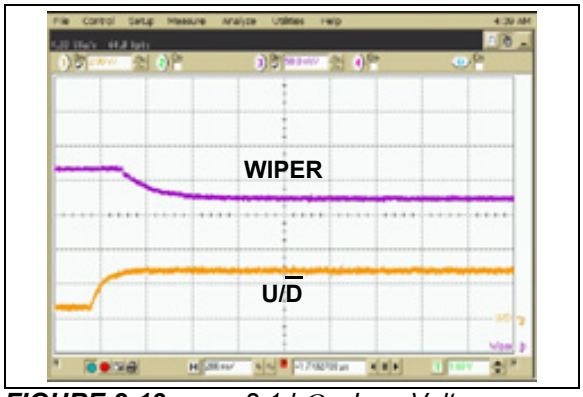

FIGURE 2-13: *2.1 kΩ – Low-Voltage Decrement Wiper Settling Time (V_{DD} = 2.7V).*

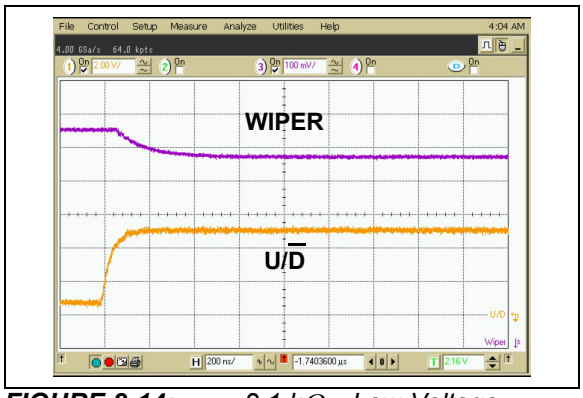

FIGURE 2-14: *2.1 kΩ – Low-Voltage Decrement Wiper Settling Time (V_{DD} = 5.5V).*

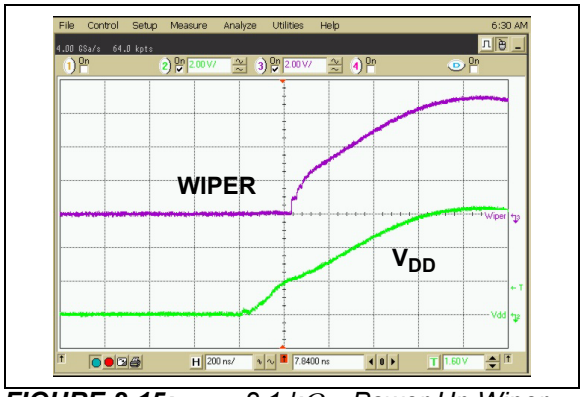

FIGURE 2-15: *2.1 kΩ – Power-Up Wiper Response Time.*

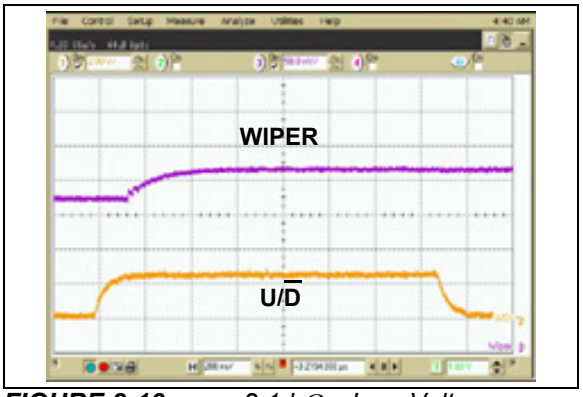

FIGURE 2-16: *2.1 kΩ – Low-Voltage Increment Wiper Settling Time (V_{DD} = 2.7V).*

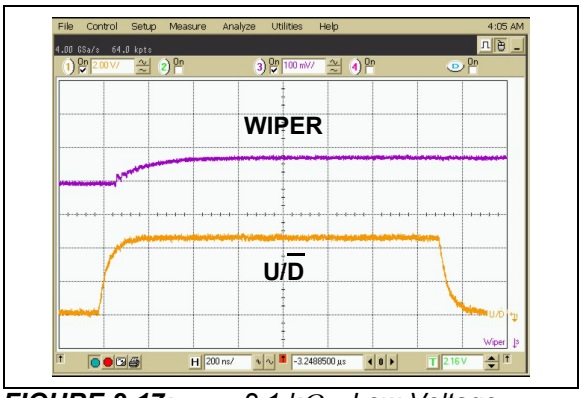

FIGURE 2-17: *2.1 kΩ – Low-Voltage Increment Wiper Settling Time (V_{DD} = 5.5V).*

© 2006-2017 Microchip Technology Inc.

Note: Unless otherwise indicated, T_A = +25°C, V_{DD} = 5V, V_{SS} = 0V.

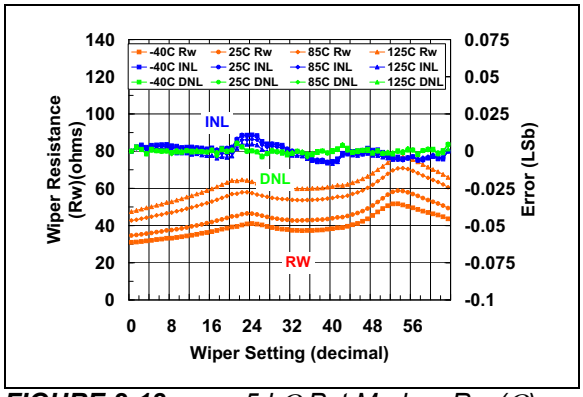

FIGURE 2-18: *5 kΩ Pot Mode – R_W (Ω), INL (LSb), DNL (LSb) vs. Wiper Setting and Ambient Temperature (V_{DD} = 5.5V).*

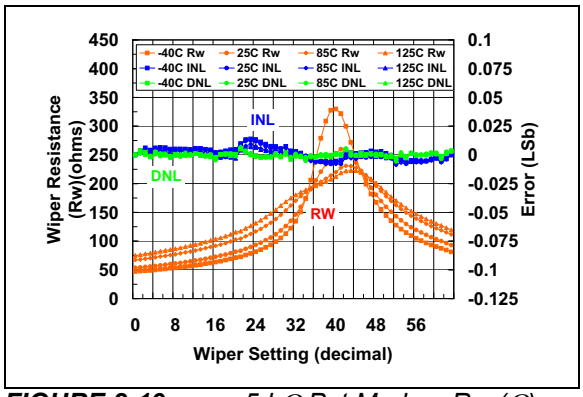

FIGURE 2-19: *5 kΩ Pot Mode – R_W (Ω), INL (LSb), DNL (LSb) vs. Wiper Setting and Ambient Temperature (V_{DD} = 2.7V).*

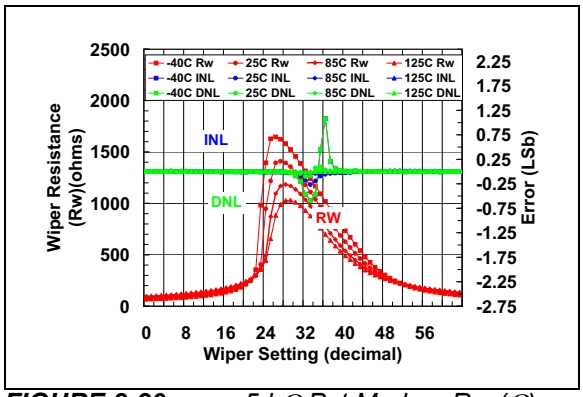

FIGURE 2-20: *5 kΩ Pot Mode – R_W (Ω), INL (LSb), DNL (LSb) vs. Wiper Setting and Ambient Temperature (V_{DD} = 1.8V).*

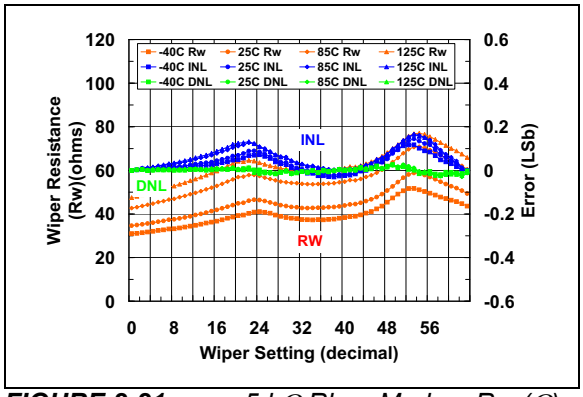

FIGURE 2-21: *5 kΩ Rheo Mode – R_W (Ω), INL (LSb), DNL (LSb) vs. Wiper Setting and Ambient Temperature (V_{DD} = 5.5V).*

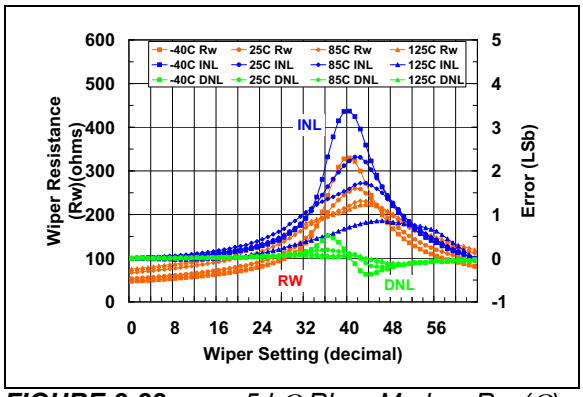

FIGURE 2-22: *5 kΩ Rheo Mode – R_W (Ω), INL (LSb), DNL (LSb) vs. Wiper Setting and Ambient Temperature (V_{DD} = 2.7V).*

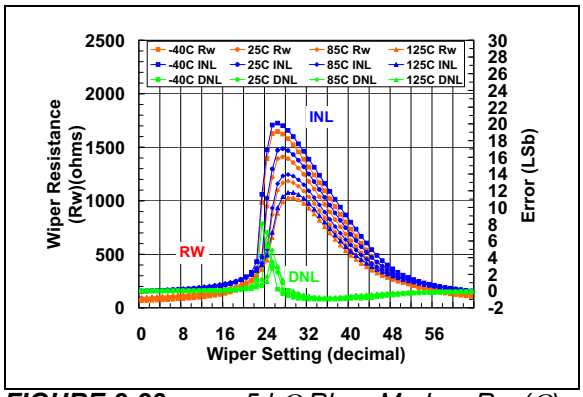

FIGURE 2-23: *5 kΩ Rheo Mode – R_W (Ω), INL (LSb), DNL (LSb) vs. Wiper Setting and Ambient Temperature (V_{DD} = 1.8V).*

Note: Unless otherwise indicated, T_A = +25°C, V_{DD} = 5V, V_{SS} = 0V.

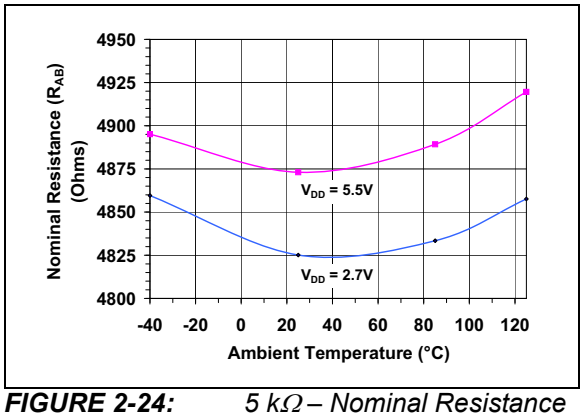

FIGURE 2-24: *5 kΩ – Nominal Resistance (Ω) vs. Ambient Temperature and V_{DD}.*

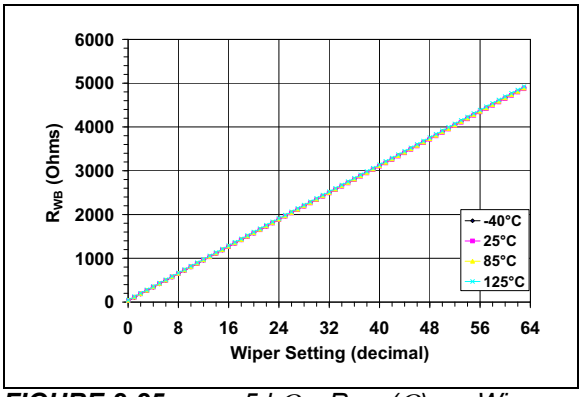

FIGURE 2-25: *5 kΩ – R_{WB} (Ω) vs. Wiper Setting and Ambient Temperature.*

© 2006-2017 Microchip Technology Inc.

Note: Unless otherwise indicated, T_A = +25°C, V_{DD} = 5V, V_{SS} = 0V.

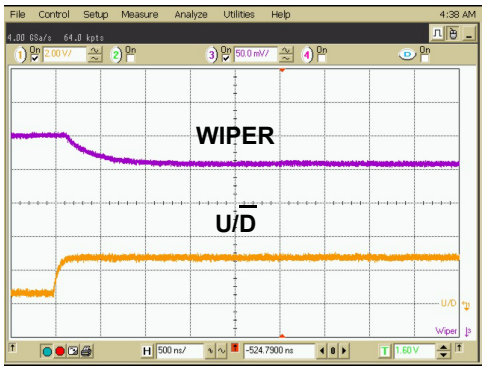

FIGURE 2-26: *5 kΩ – Low-Voltage Decrement Wiper Settling Time (V_{DD} = 2.7V).*

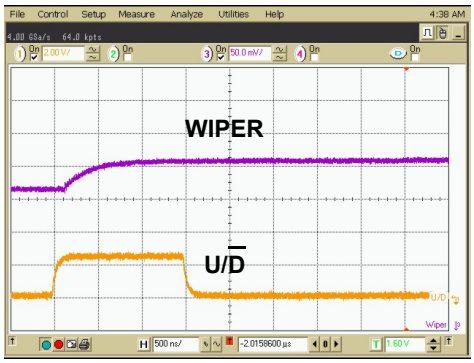

FIGURE 2-28: *5 kΩ – Low-Voltage Increment Wiper Settling Time (V_{DD} = 2.7V).*

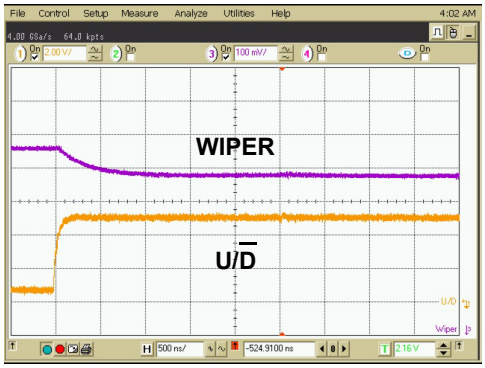

FIGURE 2-27: *5 kΩ – Low-Voltage Decrement Wiper Settling Time (V_{DD} = 5.5V).*

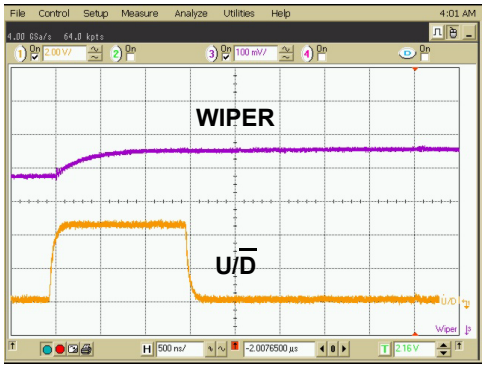

FIGURE 2-29: *5 kΩ – Low-Voltage Increment Wiper Settling Time (V_{DD} = 5.5V).*

Note: Unless otherwise indicated, T_A = +25°C, V_{DD} = 5V, V_{SS} = 0V.

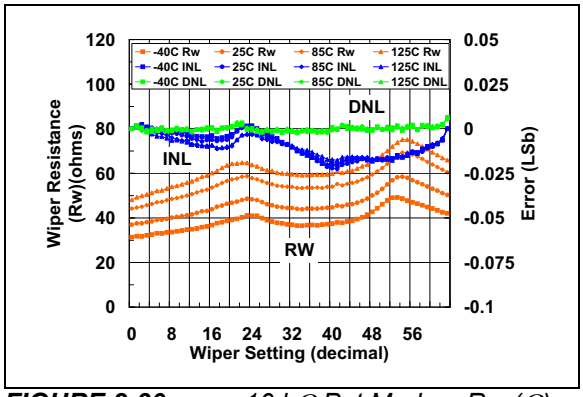

FIGURE 2-30: *10 kΩ Pot Mode – R_W (Ω), INL (LSb), DNL (LSb) vs. Wiper Setting and Ambient Temperature (V_{DD} = 5.5V).*

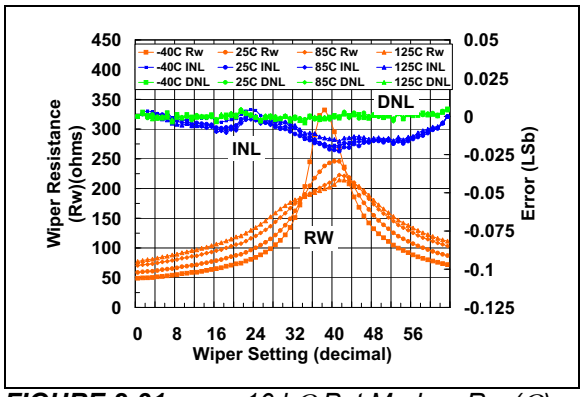

FIGURE 2-31: *10 kΩ Pot Mode – R_W (Ω), INL (LSb), DNL (LSb) vs. Wiper Setting and Ambient Temperature (V_{DD} = 2.7V).*

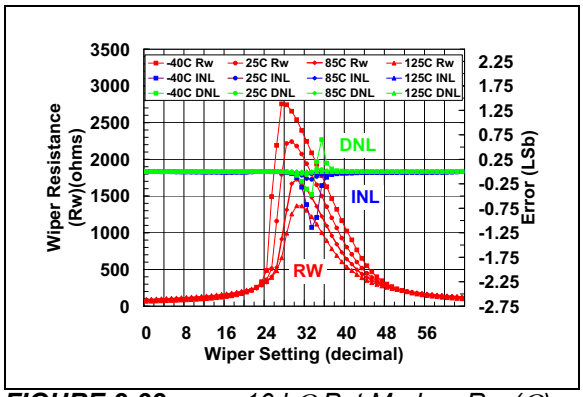

FIGURE 2-32: *10 kΩ Pot Mode – R_W (Ω), INL (LSb), DNL (LSb) vs. Wiper Setting and Ambient Temperature (V_{DD} = 1.8V).*

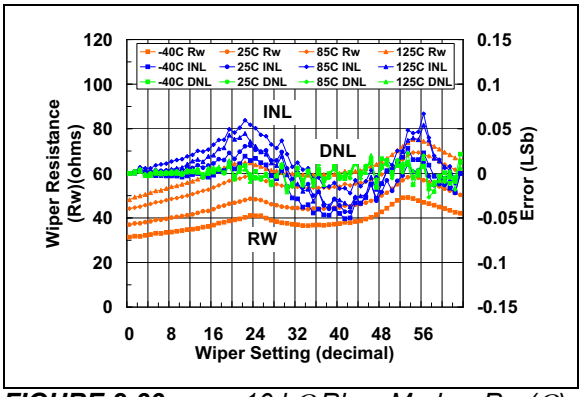

FIGURE 2-33: *10 kΩ Rheo Mode – R_W (Ω), INL (LSb), DNL (LSb) vs. Wiper Setting and Ambient Temperature (V_{DD} = 5.5V).*

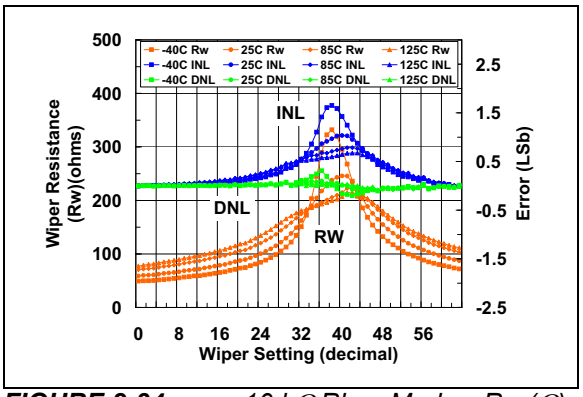

FIGURE 2-34: *10 kΩ Rheo Mode – R_W (Ω), INL (LSb), DNL (LSb) vs. Wiper Setting and Ambient Temperature (V_{DD} = 2.7V).*

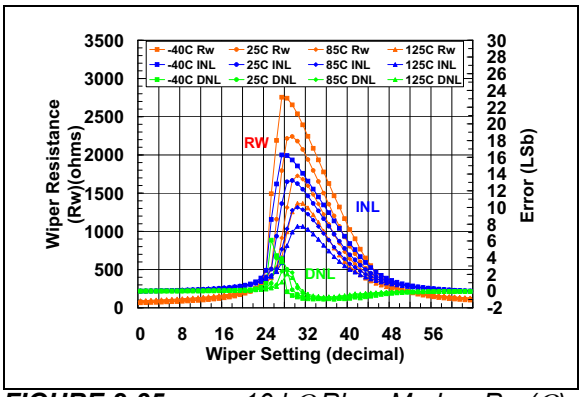

FIGURE 2-35: *10 kΩ Rheo Mode – R_W (Ω), INL (LSb), DNL (LSb) vs. Wiper Setting and Ambient Temperature (V_{DD} = 1.8V).*

© 2006-2017 Microchip Technology Inc.

Note: Unless otherwise indicated, T_A = +25°C, V_{DD} = 5V, V_{SS} = 0V.

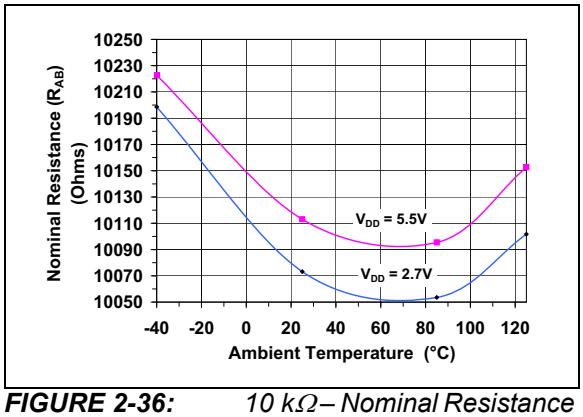

FIGURE 2-36: *10 kΩ – Nominal Resistance (Ω) vs. Ambient Temperature and V_{DD}.*

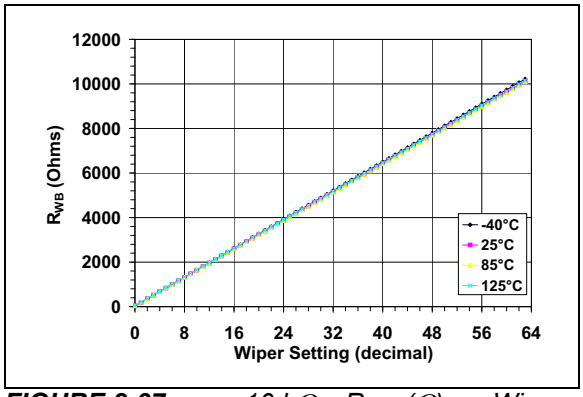

FIGURE 2-37: *10 kΩ – R_{WB} (Ω) vs. Wiper Setting and Ambient Temperature.*

Note: Unless otherwise indicated, T_A = +25°C, V_{DD} = 5V, V_{SS} = 0V.

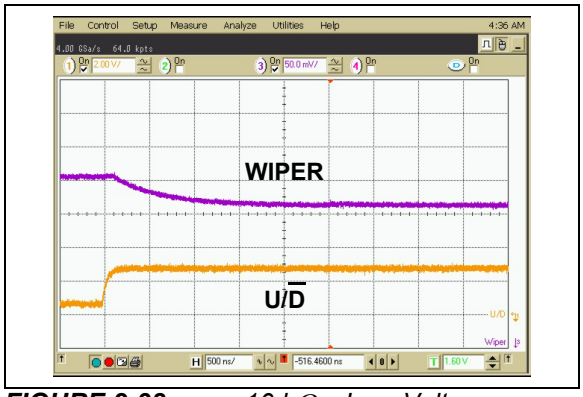

FIGURE 2-38: *10 kΩ – Low-Voltage Decrement Wiper Settling Time (V_{DD} = 2.7V).*

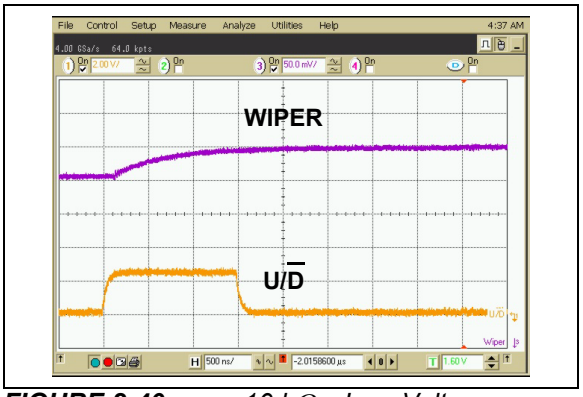

FIGURE 2-40: *10 kΩ – Low-Voltage Increment Wiper Settling Time (V_{DD} = 2.7V).*

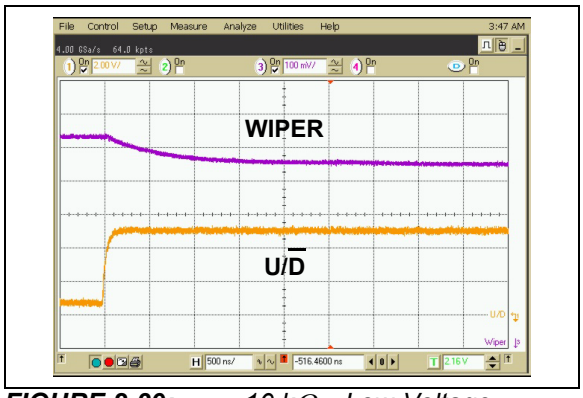

FIGURE 2-39: *10 kΩ – Low-Voltage Decrement Wiper Settling Time (V_{DD} = 5.5V).*

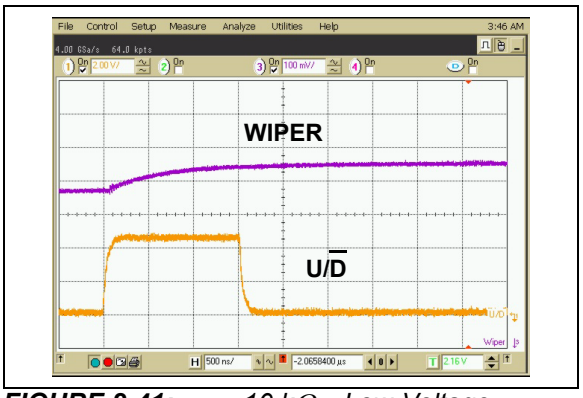

FIGURE 2-41: *10 kΩ – Low-Voltage Increment Wiper Settling Time (V_{DD} = 5.5V).*

© 2006-2017 Microchip Technology Inc.

Note: Unless otherwise indicated, T_A = +25°C, V_{DD} = 5V, V_{SS} = 0V.

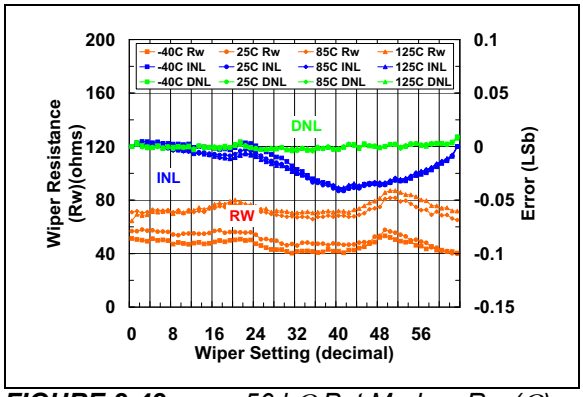

FIGURE 2-42: *50 kΩ Pot Mode – R_W (Ω), INL (LSb), DNL (LSb) vs. Wiper Setting and Ambient Temperature (V_{DD} = 5.5V).*

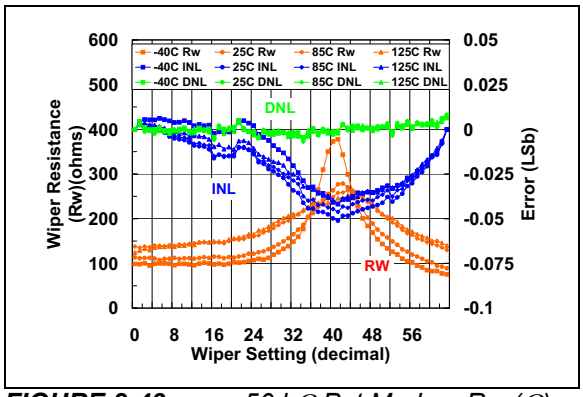

FIGURE 2-43: *50 kΩ Pot Mode – R_W (Ω), INL (LSb), DNL (LSb) vs. Wiper Setting and Ambient Temperature (V_{DD} = 2.7V).*

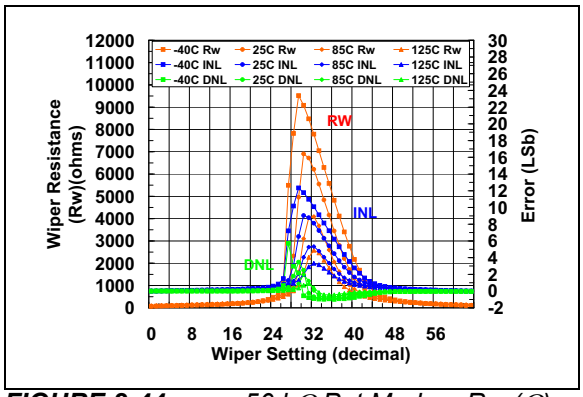

FIGURE 2-44: *50 kΩ Pot Mode – R_W (Ω), INL (LSb), DNL (LSb) vs. Wiper Setting and Ambient Temperature (V_{DD} = 1.8V).*

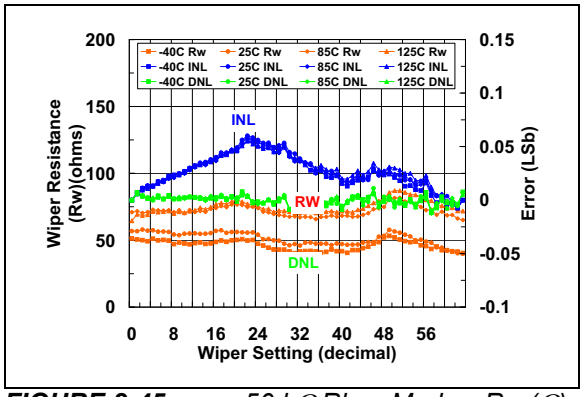

FIGURE 2-45: *50 kΩ Rheo Mode – R_W (Ω), INL (LSb), DNL (LSb) vs. Wiper Setting and Ambient Temperature (V_{DD} = 5.5V).*

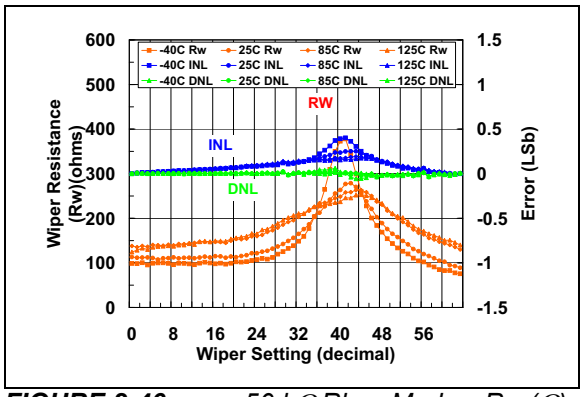

FIGURE 2-46: *50 kΩ Rheo Mode – R_W (Ω), INL (LSb), DNL (LSb) vs. Wiper Setting and Ambient Temperature (V_{DD} = 2.7V).*

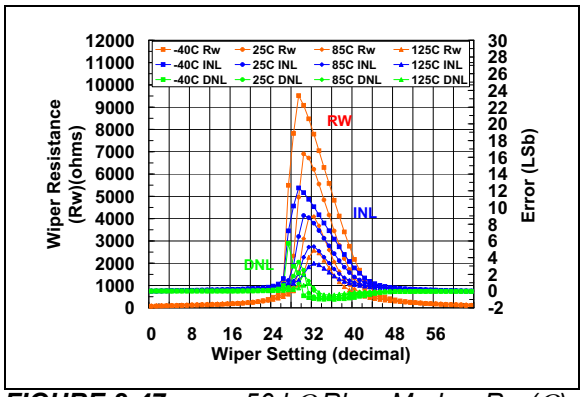

FIGURE 2-47: *50 kΩ Rheo Mode – R_W (Ω), INL (LSb), DNL (LSb) vs. Wiper Setting and Ambient Temperature (V_{DD} = 1.8V).*

Note: Unless otherwise indicated, T_A = +25°C, V_{DD} = 5V, V_{SS} = 0V.

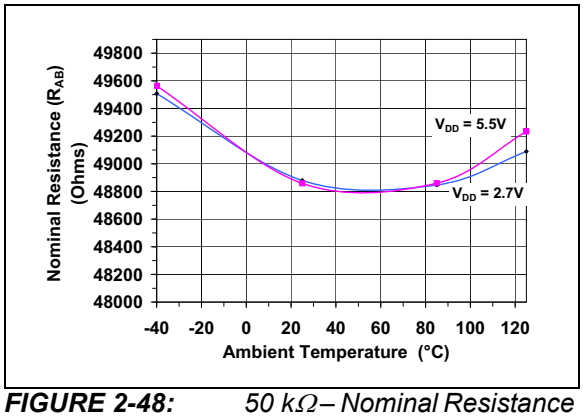

FIGURE 2-48: *50 kΩ – Nominal Resistance (Ω) vs. Ambient Temperature and V_{DD}.*

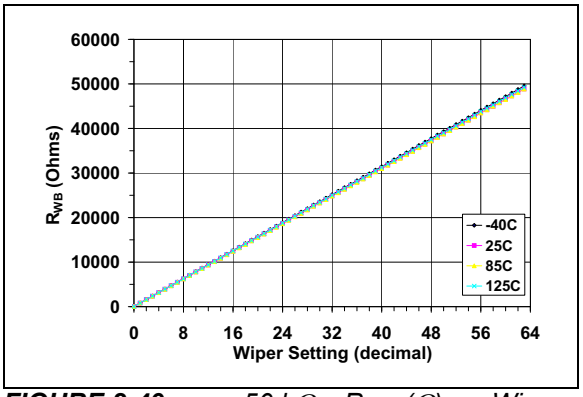

FIGURE 2-49: *50 kΩ – R_{WB} (Ω) vs. Wiper Setting and Ambient Temperature.*

© 2006-2017 Microchip Technology Inc.

Note: Unless otherwise indicated, T_A = +25°C, V_{DD} = 5V, V_{SS} = 0V.

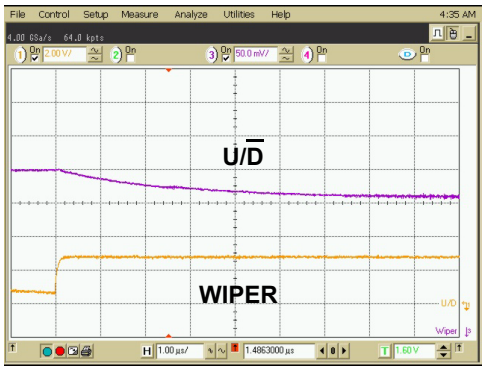

FIGURE 2-50: *50 kΩ – Low-Voltage Decrement Wiper Settling Time (V_{DD} = 2.7V).*

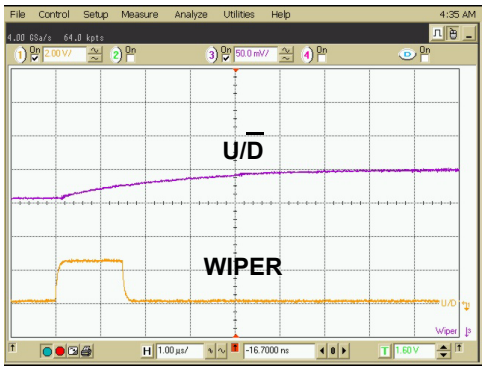

FIGURE 2-53: *50 kΩ – Low-Voltage Increment Wiper Settling Time (V_{DD} = 2.7V).*

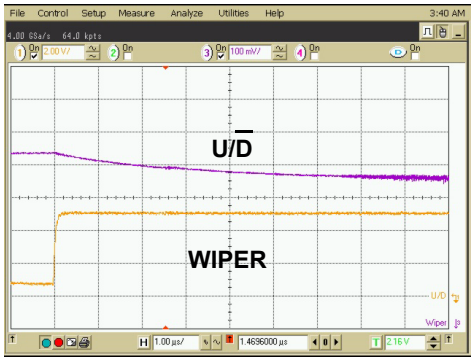

FIGURE 2-51: *50 kΩ – Low-Voltage Decrement Wiper Settling Time (V_{DD} = 5.5V).*

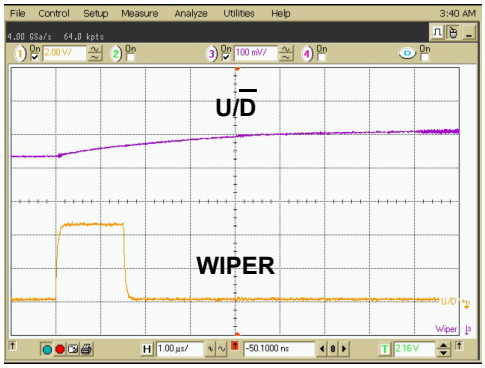

FIGURE 2-54: *50 kΩ - Low-Voltage Increment Wiper Settling Time (V_{DD} = 5.5V).*

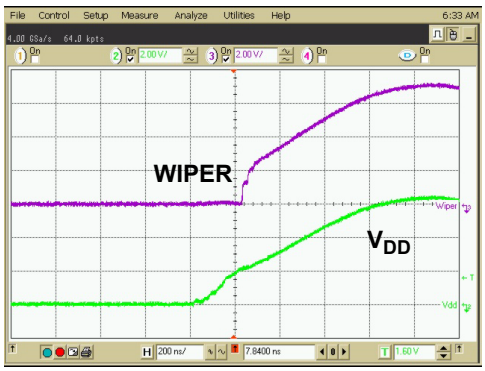

FIGURE 2-52: *50 kΩ – Power-Up Wiper Response Time.*

Note: Unless otherwise indicated, T_A = +25°C, V_{DD} = 5V, V_{SS} = 0V.

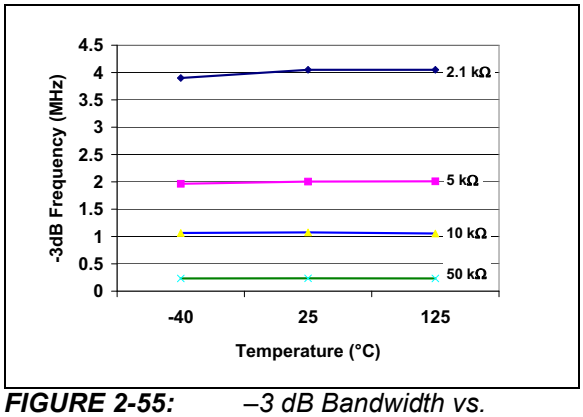

FIGURE 2-55: *–3 dB Bandwidth vs. Temperature.*

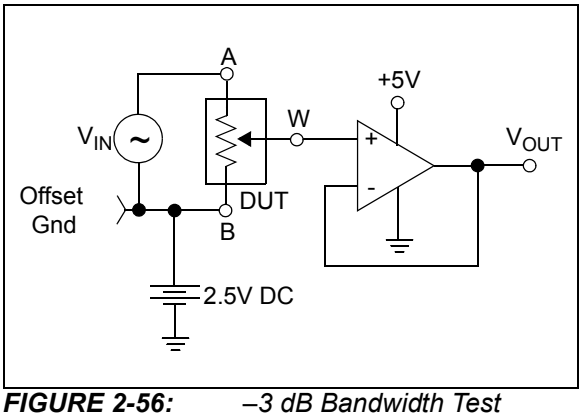

FIGURE 2-56: *–3 dB Bandwidth Test Circuit.*

© 2006-2017 Microchip Technology Inc.

3.0 PIN DESCRIPTIONS

The descriptions of the pins are listed in Table 3-1.

TABLE 3-1: PIN FUNCTION TABLE

Pin Number			Symbol	Pin Type	Buffer Type	Function
MCP4011 (SOIC-8)	MCP4012 MCP4013 (SOT-23-6)	MCP4014 (SOT-23-5)				
1	1	1	V_{DD}	P	—	Positive Power Supply Input
2	2	2	V_{SS}	P	—	Ground
3	6	—	A	I/O	A	Potentiometer Terminal A
4	5	5	W	I/O	A	Potentiometer Wiper Terminal
5	4	4	$\overline{CS}$	I	TTL	Chip Select Input
6	—	—	B	I/O	A	Potentiometer Terminal B
7	—	—	NC	—	—	No Connection
8	3	3	U/$\overline{D}$	I	TTL	Increment/$\overline{\text{Decrement}}$ Input

Legend: TTL = TTL compatible input; A = Analog input; I = Input; O = Output; P = Power

3.1 Positive Power Supply Input (V_{DD})

The V_{DD} pin is the device's positive power supply input. The input power supply is relative to V_{SS} and can range from 1.8V to 5.5V. A decoupling capacitor on V_{DD} (to V_{SS}) is recommended to achieve maximum performance.

3.2 Ground (V_{SS})

The V_{SS} pin is the device ground reference.

3.3 Potentiometer Terminal A

The terminal A pin is connected to the internal potentiometer's terminal A (available on some devices). The potentiometer's terminal A is the fixed connection to the 0x3F terminal of the digital potentiometer.

The terminal A pin is available on the MCP4011, MCP4012 and MCP4013 devices. The terminal A pin does not have a polarity relative to the terminal W or B pins. The terminal A pin can support both positive and negative current. The voltage on terminal A must be between V_{SS} and V_{DD}.

The terminal A pin is not available on the MCP4014. The potentiometer's terminal A is internally floating.

3.4 Potentiometer Wiper (W) Terminal

The terminal W pin is connected to the internal potentiometer's terminal W (the wiper). The wiper terminal is the adjustable terminal of the digital potentiometer. The terminal W pin does not have a polarity relative to terminals A or B pins. The terminal W pin can support both positive and negative current. The voltage on terminal W must be between V_{SS} and V_{DD}.

3.5 Potentiometer Terminal B

The terminal B pin is connected to the internal potentiometer's terminal B (available on some devices). The potentiometer's terminal B is the fixed connection to the 0x00 terminal of the digital potentiometer.

The terminal B pin is available on the MCP4011 device. The terminal B pin does not have a polarity relative to the terminal W or A pins. The terminal B pin can support both positive and negative current. The voltage on terminal B must be between V_{SS} and V_{DD}.

The terminal B pin is not available on the MCP4012, MCP4013 and MCP4014 devices.

For the MCP4013 and MCP4014, the internal potentiometer's terminal B is internally connected to V_{SS}. Terminal B does not have a polarity relative to terminals W or A. Terminal B can support both positive and negative current.

For the MCP4012, terminal B is internally floating.

© 2006-2017 Microchip Technology Inc.

3.6 Chip Select ($\overline{CS}$)

The $\overline{CS}$ pin is the chip select input. Forcing the $\overline{CS}$ pin to V_{IL} enables the serial commands. These commands can increment and decrement the wiper. Forcing the $\overline{CS}$ pin to V_{IHH} enables the high-voltage serial commands. These commands can increment and decrement the wiper and are compatible with the MCP402X devices. The wiper is saved to volatile memory (RAM).

The $\overline{CS}$ pin has an internal pull-up resistor. The resistor will become “disabled” when the voltage on the $\overline{CS}$ pin is below the V_{IH} level. This means that when the $\overline{CS}$ pin is “floating”, the $\overline{CS}$ pin will be pulled to the V_{IH} level (serial communication (the U/$\overline{D}$ pin) is ignored). And when the $\overline{CS}$ pin is driven low (V_{IL}), the resistance becomes very large to reduce the device current consumption when serial commands are occurring. See Figure 2-3 for additional information.

3.7 Increment/Decrement (U/$\overline{D}$)

The U/$\overline{D}$ pin input is used to increment or decrement the wiper on the digital potentiometer. An increment moves the wiper one step toward terminal A, while a decrement moves the wiper one step toward terminal B.

© 2006-2017 Microchip Technology Inc.

4.0 GENERAL OVERVIEW

The MCP402X devices are general-purpose digital potentiometers intended to be used in applications where a programmable resistance with moderate bandwidth is desired.

Applications generally suited for the MCP402X devices include:

- Set point or offset trimming
- Sensor calibration
- Selectable gain and offset amplifier designs
- Cost-sensitive mechanical trim pot replacement

The digital potentiometer is available in four nominal resistances (R_{AB}), where the nominal resistance is defined as the resistance between terminal A and terminal B. The four nominal resistances are 2.1 kΩ, 5 kΩ, 10 kΩ and 50 kΩ.

There are 63 resistors in a string between terminal A and terminal B. The wiper can be set to tap onto any of these 63 resistors thus providing 64 possible settings (including terminal A and terminal B).

Figure 4-1 shows a block diagram for the resistive network of the device. Equation 4-1 shows the calculation for the step resistance, while Equation 4-2 illustrates the calculation used to determine the resistance between the wiper and terminal B.

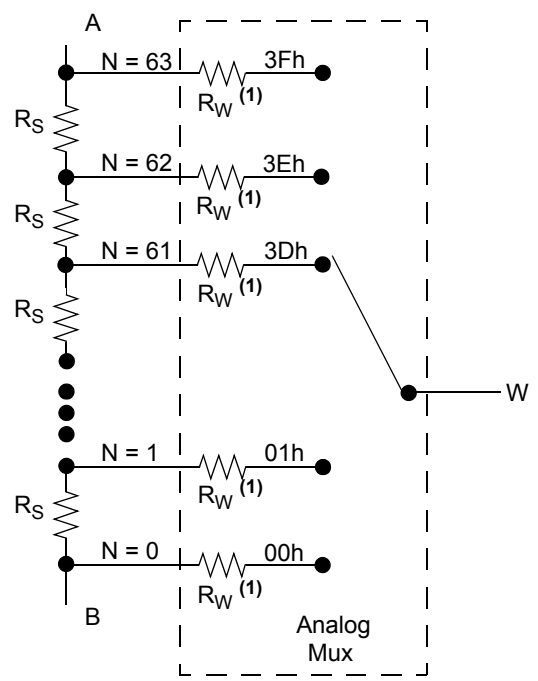

Note 1: The wiper resistance is tap dependent. That is, each tap selection resistance has a small variation. This variation effects the smaller resistance devices (2.1 kΩ) more.

FIGURE 4-1: *Resistor Block Diagram.*

EQUATION 4-1: R_S CALCULATION

$$R_S = \frac{R_{AB}}{63}$$

EQUATION 4-2: R_{WB} CALCULATION

$$R_{WB} = \frac{R_{AB}N}{63} + R_W$$

N = 0 to 63 (decimal)

The ideal resistance difference between two successive codes is 1 LSb. If we use N = 1 and R_W = 0 in Equation 4-2, we can calculate the step size for each increment or decrement command.

The MCP4011 device offers a voltage divider (potentiometer) with all terminals available on pins.

The MCP4012 is a true rheostat, with terminal A and the wiper (W) of the variable resistor available on pins.

The MCP4013 device offers a voltage divider (potentiometer) with terminal B connected to ground.

The MCP4014 device is a Rheostat device with terminal A of the resistor floating, terminal B connected to ground, and the wiper (W) available on pin.

The MCP4011 can be externally configured to implement any of the MCP4012, MCP4013 or MCP4014 configurations.

4.1 Serial Interface

A 2-wire synchronous serial protocol is used to increment or decrement the digital potentiometer's wiper terminal. The Increment/Decrement (U/$\overline{D}$) protocol utilizes the $\overline{CS}$ and U/$\overline{D}$ input pins. Both inputs are tolerant of signals up to 12.5V without damaging the device. The $\overline{CS}$ pin can differentiate between two high-voltage levels, V_{IH} and V_{IHH}. This enables additional commands without requiring additional input pins. The high-voltage commands (V_{IHH} on the $\overline{CS}$ pin) are similar to the standard commands and are supported for compatibility to the MCP401X family of devices.

The simple U/$\overline{D}$ protocol uses the state of the U/$\overline{D}$ pin at the falling edge of the $\overline{CS}$ pin to determine if Increment or Decrement mode is desired. Subsequent rising edges of the U/$\overline{D}$ pin move the wiper.

The wiper value will not underflow or overflow.

4.2 Power-Up

When the device powers up (rising V_{DD} crosses the Trip Point Voltage (V_{TP})), the default wiper setting is restored. Table 4-1 shows the default value loaded into the wiper on POR/BOR.

TABLE 4-1: DEFAULT POR WIPER SETTING SELECTION

Package Code	Default POR Wiper Setting	Wiper Code	Typical R_{AB} Value
–202	Mid-scale	1Fh	2.1 kΩ
–502	Mid-scale	1Fh	5.0 kΩ
–103	Mid-scale	1Fh	10.0 kΩ
–503	Mid-scale	1Fh	50.0 kΩ

While $V_{DD} < V_{min}$ (1.8V), the electrical performance may not meet the data sheet specifications (see Figure 4-2). The wiper state may be unknown. Also, the device may be capable of incrementing or decrementing, if a valid command is detected on the $\overline{CS}$ and U/$\overline{D}$ pins.

4.3 Brown-Out

If the device V_{DD} is below the specified minimum voltage, care must be taken to ensure that the $\overline{CS}$ and U/$\overline{D}$ pins do not “create” any of the serial commands.

When the device V_{DD} drops below V_{MIN} (1.8V), the electrical performance may not meet the data sheet specifications (see Figure 4-2). The wiper state may be unknown. Also, the device may be capable of incrementing or decrementing, if a valid command is detected on the $\overline{CS}$ and U/$\overline{D}$ pins.

When the device voltage rises from below the power-up trip point (V_{TP}) into the valid operation voltage range, the wiper state will be forced to the default POR wiper setting (see Table 4-1).

4.4 Serial Interface Inactive

The serial interface is inactive any time the $\overline{CS}$ pin is at V_{IH} and all write cycles are completed.

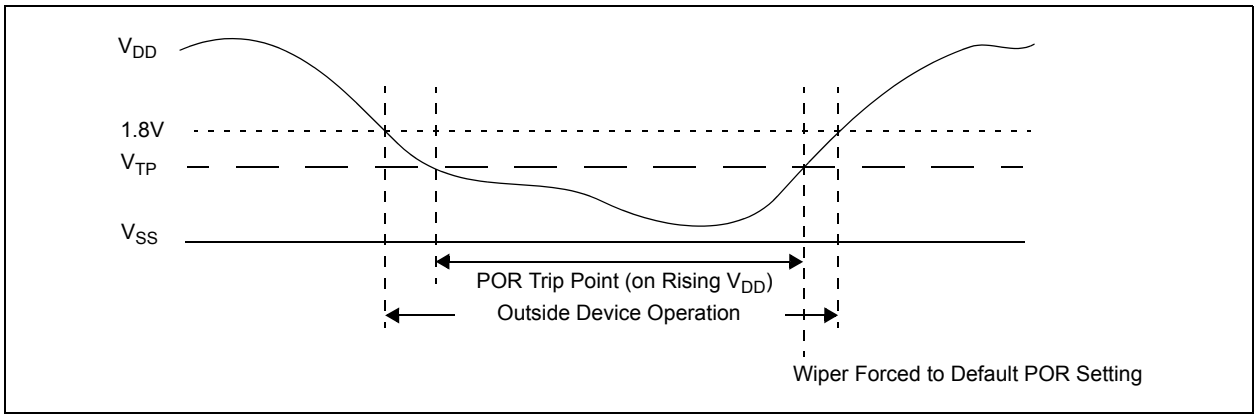

FIGURE 4-2: *Power-Up and Brown-Out.*

© 2006-2017 Microchip Technology Inc.

5.0 SERIAL INTERFACE

5.1 Overview

The MCP4011/2/3/4 utilizes a simple 2-wire interface to increment or decrement the digital potentiometer's wiper terminal (W). This interface uses the $\overline{CS}$ and U/$\overline{D}$ pins. The $\overline{CS}$ pin is the Chip Select input, while the U/$\overline{D}$ pin is the Up/Down input.

The Increment/Decrement protocol enables the device to move one step at a time through the range of possible resistance values. The wiper value is initialized with the "default" value upon power-up.

A wiper value of 00h connects the wiper to terminal B. A wiper value of 3Fh connects the wiper to terminal A. Increment commands move the wiper toward terminal A, but will not increment to a value greater than 3Fh. Decrement commands move the wiper toward terminal B, but will not decrement below 00h.

Refer to **Section 1.0 "Electrical Characteristics"**, AC/DC Electrical Characteristics table for detailed input threshold and timing specifications.

Communication is unidirectional. Therefore, the value of the current wiper setting cannot be read out of the MCP401X device.

5.2 Serial Commands

The MCP401X devices support eight serial commands. Six of these commands are for support and to ease migration with the MCP402X family of devices. The commands can be grouped into the following types:

- Serial Commands
- High-voltage Serial Commands

All the commands are shown in Table 5-1.

The command type is determined by the voltage level the $\overline{CS}$ pin is driven to. The initial state that the $\overline{CS}$ pin must be driven is V_{IH}. From V_{IH}, the two levels that the $\overline{CS}$ pin can be driven are:

- V_{IL}
- V_{IHH}

If the $\overline{CS}$ pin is driven from V_{IH} to V_{IL}, a serial command is selected. If the $\overline{CS}$ pin is driven from V_{IH} to V_{IHH}, a high-voltage serial command is selected.

Support of the high-voltage serial commands is for compatibility with the MCP402X devices.

TABLE 5-1: COMMANDS

Command Name	High Voltage on $\overline{CS}$ Pin?
Increment	—
Increment (for MCP402X Compatibility)	—
Decrement	—
Decrement (for MCP402X Compatibility)	—
High-Voltage Increment 1 (for MCP402X Compatibility)	Yes
High-Voltage Increment 2 (for MCP402X Compatibility)	Yes
High-Voltage Decrement 1 (for MCP402X Compatibility)	Yes
High-Voltage Decrement 2 (for MCP402X Compatibility)	Yes

5.2.1 INCREMENT

This mode is achieved by initializing the U/$\overline{D}$ pin to a high state (V_{IH}) prior to achieving a low state (V_{IL}) on the $\overline{CS}$ pin. Subsequent rising edges of the U/$\overline{D}$ pin increment the wiper setting toward terminal A. This is shown in Figure 5-1.

After the wiper is incremented to the desired position, the $\overline{CS}$ pin should be forced to V_{IH} to ensure that "unexpected" transitions on the U/$\overline{D}$ pin do not cause the wiper setting to increment. Driving the $\overline{CS}$ pin to V_{IH} should occur as soon as possible (within device specifications) after the last desired increment occurs.

When the device voltage falls below the RAM retention voltage of the device, the wiper state may be corrupted. When the device returns to the operating range, the wiper will be loaded with the default POR wiper setting.

After the $\overline{CS}$ pin is driven to V_{IH} (from V_{IL}), any other serial command may immediately be entered.

Note:	The wiper value will not overflow. That is, once the wiper value equals 0x3F, subsequent increment commands are ignored.

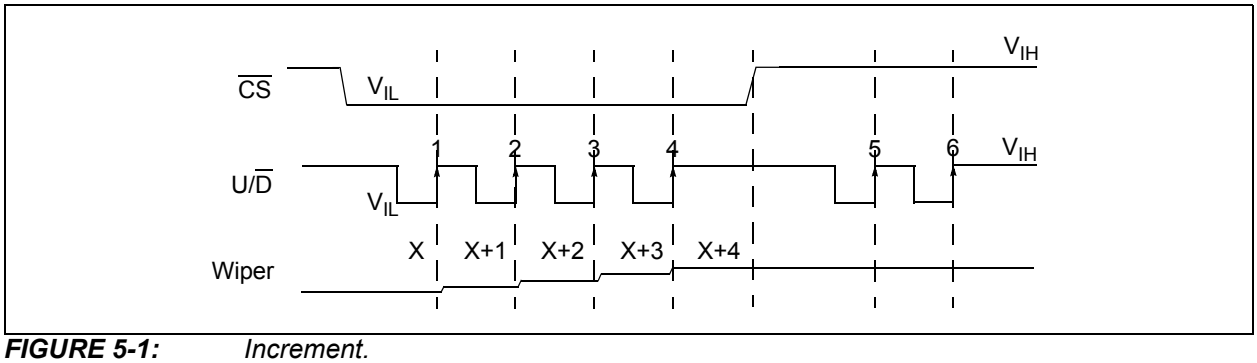

FIGURE 5-1: *Increment.*

© 2006-2017 Microchip Technology Inc.

5.2.2 INCREMENT (FOR MCP402X COMPATIBILITY)

Note:	This command allows compatibility with the MCP402X family, which supports updating of the nonvolatile wiper setting.

This mode is achieved by initializing the U/$\overline{D}$ pin to a high state (V_{IH}) prior to achieving a low state (V_{IL}) on the $\overline{CS}$ pin. Subsequent rising edges of the U/$\overline{D}$ pin increments the wiper setting toward terminal A. This is shown in Figure 5-2.

After the wiper is incremented to the desired position, the U/$\overline{D}$ pin should be driven low (V_{IL}), and the $\overline{CS}$ pin should be forced to V_{IH} to ensure that "unexpected" transitions on the U/$\overline{D}$ pin do not cause the wiper setting to increment. Driving the $\overline{CS}$ pin to V_{IH} should occur as soon as possible (within device specifications) after the last desired increment occurs.

When the device voltage falls below the RAM retention voltage of the device, the wiper state may be corrupted. When the device returns to the operating range, the wiper will be loaded with the Default POR wiper setting.

After the $\overline{CS}$ pin is driven to V_{IH} (from V_{IL}), any other serial command may immediately be entered.

Note:	The wiper value will not overflow. That is, once the wiper value equals 0x3F, subsequent increment commands are ignored.

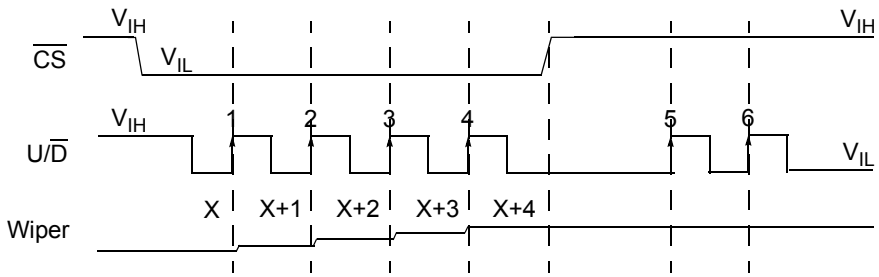

FIGURE 5-2: *Increment (For MCP402X Compatibility).*

5.2.3 DECREMENT

This mode is achieved by initializing the U/$\overline{D}$ pin to a low state (V_{IL}) prior to achieving a low state (V_{IL}) on the $\overline{CS}$ pin. Subsequent rising edges of the U/$\overline{D}$ pin will decrement the wiper setting toward terminal B. This is shown in Figure 5-3.

After the wiper is decremented to the desired position, the U/$\overline{D}$ pin should be forced low (V_{IL}) and the $\overline{CS}$ pin should be forced to V_{IH}. This will ensure that "unexpected" transitions on the U/$\overline{D}$ pin do not cause the wiper setting to decrement. Driving the $\overline{CS}$ pin to V_{IH} should occur as soon as possible (within device specifications) after the last desired increment occurs.

When the device voltage falls below the RAM retention voltage of the device, the wiper state may be corrupted. When the device returns to the operating range, the wiper will be loaded with the default POR wiper setting.

After the $\overline{CS}$ pin is driven to V_{IH} (from V_{IL}), any other serial command may immediately be entered.

Note:	The wiper value will not underflow. That is, once the wiper value equals 0x00, subsequent decrement commands are ignored.

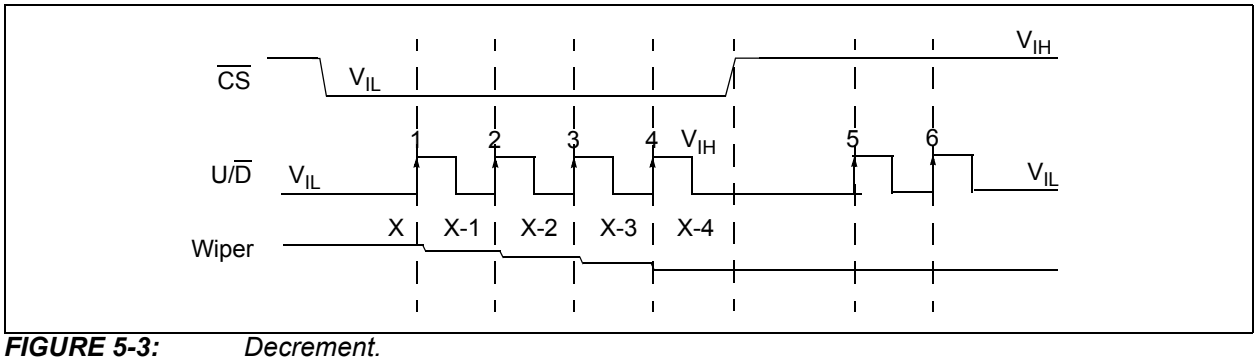

FIGURE 5-3: *Decrement.*

© 2006-2017 Microchip Technology Inc.

5.2.4 DECREMENT (FOR MCP402X COMPATIBILITY)

Note:	This command allows compatibility with the MCP402X family, which supports updating of the nonvolatile wiper setting.

This mode is achieved by initializing the U/$\overline{D}$ pin to a low state (V_{IL}) prior to achieving a low state (V_{IL}) on the $\overline{CS}$ pin. Subsequent rising edges of the U/$\overline{D}$ pin decrement the wiper setting toward terminal B. This is shown in Figure 5-4.

After the wiper is decremented to the desired position, the U/$\overline{D}$ pin should remain high (V_{IH}), and the $\overline{CS}$ pin should be forced to V_{IH} to ensure that "unexpected" transitions on the U/$\overline{D}$ pin do not cause the wiper setting to increment. Driving the $\overline{CS}$ pin to V_{IH} should occur as soon as possible (within device specifications) after the last desired increment occurs.

When the device voltage falls below the RAM retention voltage of the device, the wiper state may be corrupted. When the device returns to the operating range, the wiper will be loaded with the default POR wiper setting.

After the $\overline{CS}$ pin is driven to V_{IH} (from V_{IL}), any other serial command may immediately be entered.

Note:	The wiper value will not underflow. That is, once the wiper value equals 0x00, subsequent decrement commands are ignored.

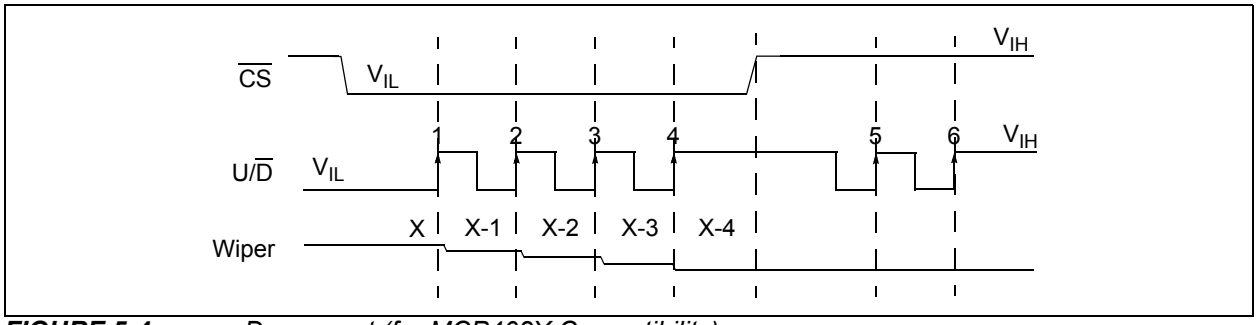

FIGURE 5-4: *Decrement (for MCP402X Compatibility).*

5.2.5 HIGH-VOLTAGE INCREMENT 1 (FOR MCP402X COMPATIBILITY)

Note: This command allows compatibility with the MCP402X family, which supports updating of the nonvolatile wiper setting with the WiperLock Technology feature.

This mode is achieved by initializing the U/$\overline{D}$ pin to a high state (V_{IH}) prior to the $\overline{CS}$ pin being driven to V_{IHH}. Subsequent rising edges of the U/$\overline{D}$ pin increment the wiper setting toward terminal A. Set the U/$\overline{D}$ pin to the high state (V_{IH}) prior to forcing the $\overline{CS}$ pin to V_{IH}. This is shown in Figure 5-5.

After the $\overline{CS}$ pin is driven to V_{IH} (from V_{IL}), any other serial command may immediately be entered.

Note: The wiper value will not overflow. That is, once the wiper value equals 0x3F, subsequent increment commands are ignored.

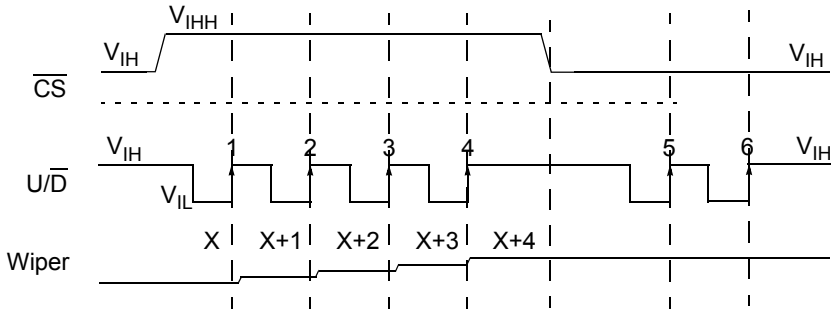

FIGURE 5-5: *High-Voltage Increment 1 (for MCP402X Compatibility).*

© 2006-2017 Microchip Technology Inc.

5.2.6 HIGH-VOLTAGE INCREMENT 2 (FOR MCP402X COMPATIBILITY)

Note: This command allows compatibility with the MCP402X family, which supports updating of the nonvolatile wiper setting with the WiperLock Technology feature.

This mode is achieved by initializing the U/$\overline{D}$ pin to a high state (V_{IH}) prior to the $\overline{CS}$ pin being driven to V_{IHH}. Subsequent rising edges of the U/$\overline{D}$ pin increment the wiper setting toward terminal A. Set the U/$\overline{D}$ pin to the low state (V_{IL}) prior to forcing the $\overline{CS}$ pin to V_{IH}. This is shown in Figure 5-6.

After the $\overline{CS}$ pin is driven to V_{IH} (from V_{IL}), any other serial command may immediately be entered.

Note: The wiper value will not overflow. That is, once the wiper value equals 0x3F, subsequent increment commands are ignored.

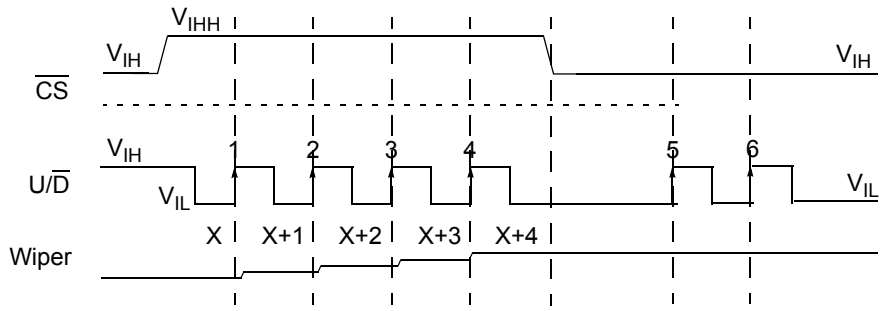

FIGURE 5-6: *High-Voltage Increment 2 (for MCP402X Compatibility).*

5.2.7 HIGH-VOLTAGE DECREMENT 1 (FOR MCP402X COMPATIBILITY)

Note: This command allows compatibility with the MCP402X family, which supports updating of the nonvolatile wiper setting with the WiperLock Technology feature.

This mode is achieved by initializing the U/$\overline{D}$ pin to a low state (V_{IL}) prior to the $\overline{CS}$ pin being driven to V_{IHH}. Subsequent rising edges of the U/$\overline{D}$ pin decrement the wiper setting toward terminal B. Set the U/$\overline{D}$ pin to the low state (V_{IL}) prior to forcing the $\overline{CS}$ pin to V_{IH}. This is shown in Figure 5-7.

After the $\overline{CS}$ pin is driven to V_{IH} (from V_{IL}), any other serial command may immediately be entered.

Note: The wiper value will not underflow. That is, once the wiper value equals 0x00, subsequent decrement commands are ignored.

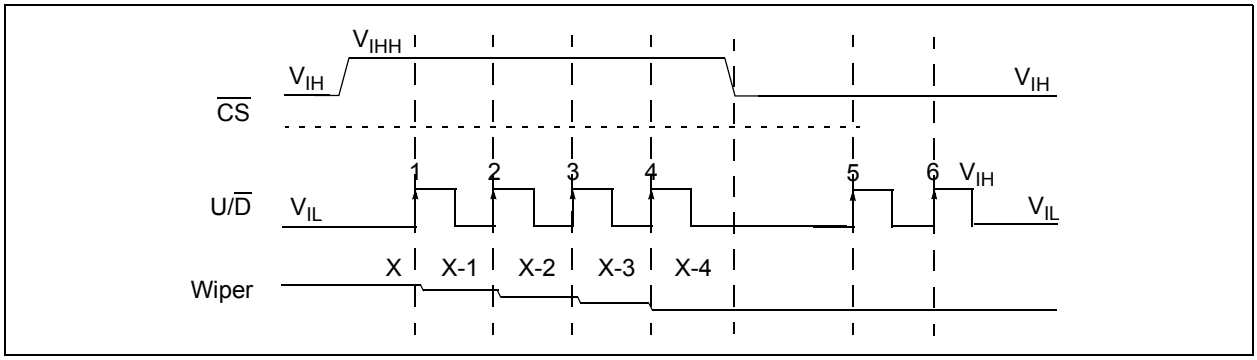

FIGURE 5-7: *High-Voltage Decrement 1 (for MCP402X Compatibility).*

© 2006-2017 Microchip Technology Inc.

5.2.8 HIGH-VOLTAGE DECREMENT 2 (FOR MCP402X COMPATIBILITY)

Note: This command allows compatibility with the MCP402X family, which supports updating of the nonvolatile wiper setting with the WiperLock Technology feature.

This mode is achieved by initializing the U/$\overline{D}$ pin to the low state (V_{IL}) prior to driving the $\overline{CS}$ pin to V_{IHH}. Subsequent rising edges of the U/$\overline{D}$ pin decrement the wiper setting toward terminal B. Set the U/$\overline{D}$ pin to a high state (V_{IH}) prior to forcing the $\overline{CS}$ pin to V_{IH}. This is shown in Figure 5-8.

After the $\overline{CS}$ pin is driven to V_{IH} (from V_{IL}), any other serial command may immediately be entered.

Note: The wiper value will not underflow. That is, once the wiper value equals 0x00, subsequent decrement commands are ignored.

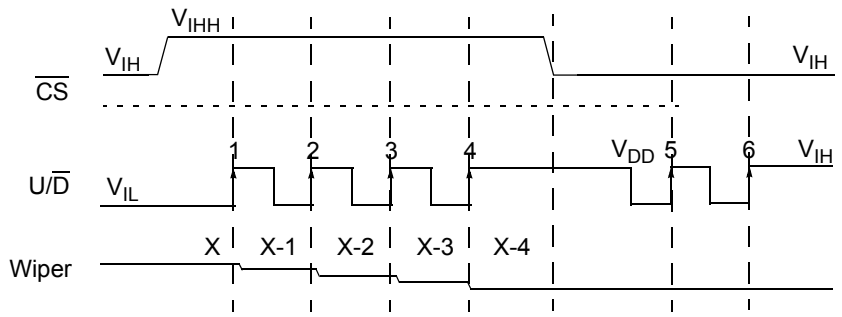

FIGURE 5-8: *High-Voltage Decrement 2 (for MCP402X Compatibility).*

5.3 $\overline{CS}$ High Voltage

The $\overline{CS}$ pin is high-voltage (V_{IHH}) tolerant, like the MCP402X. This allows the MCP401X to be used in MCP402X applications without needing to change other portions of the application circuit.

6.0 RESISTOR

Digital potentiometer applications can be divided into two categories:

- Rheostat configuration
- Potentiometer (or voltage divider) configuration

Figure 6-1 shows a block diagram for the MCP401X resistors.

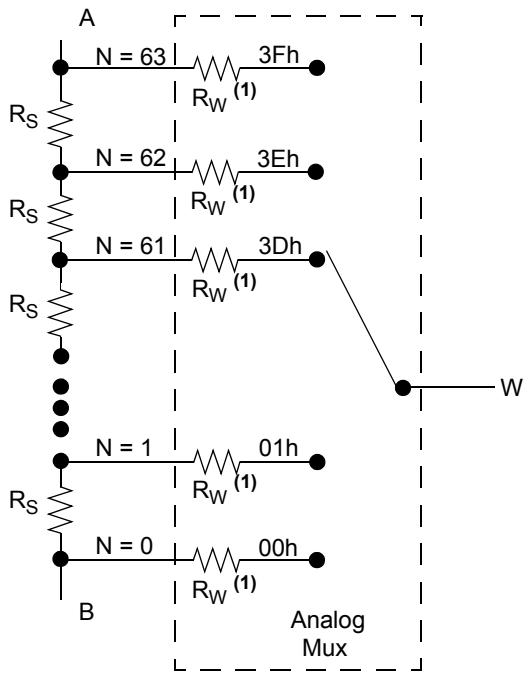

Note 1: The wiper resistance is tap dependent. That is, each tap selection resistance has a small variation. This variation effects the smaller resistance devices (2.1 kΩ) more.

FIGURE 6-1: *Resistor Block Diagram.*

Step resistance (R_S) is the resistance from one tap setting to the next. This value will be dependent on the R_{AB} value that has been selected. Table 6-1 shows the typical step resistances for each device.

The total resistance of the device has minimal variation due to operating voltage (see Figure 2-11, Figure 2-24, Figure 2-36 or Figure 2-48).

TABLE 6-1: TYPICAL STEP RESISTANCES

Part Number	Typical Resistance (Ω)	
	Total (R_{AB})	Step (R_S)
MCP401X-202E	2100	33.33
MCP401X-502E	5000	79.37
MCP401X-103E	10000	158.73
MCP401X-503E	50000	793.65

Terminal A and B, as well as the wiper W, do not have a polarity. These terminals can support both positive and negative current.

© 2006-2017 Microchip Technology Inc.

6.1 Resistor Configurations

6.1.1 RHEOSTAT CONFIGURATION

When used as a rheostat, two of the three digital potentiometer's terminals are used as a resistive element in the circuit. With terminal W (wiper) and either terminal A or terminal B, a variable resistor is created. The resistance will depend on the tap setting of the wiper and the wiper's resistance. The resistance is controlled by changing the wiper setting.

The unused terminal (B or A) should be left floating. Figure 6-2 shows the two possible resistors that can be used. Reversing the polarity of the A and B terminals will not affect operation.

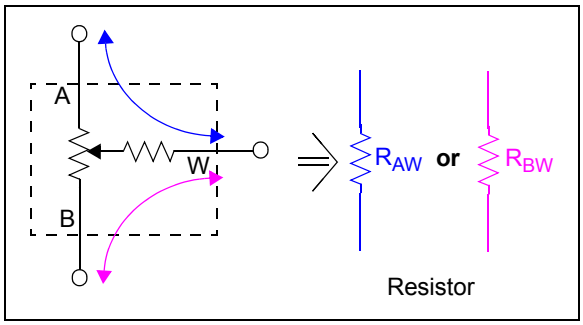

FIGURE 6-2: *Rheostat Configuration.*

This allows the control of the total resistance between the two nodes. The total resistance depends on the "starting" terminal to the wiper terminal. At the code 00h, the R_{BW} resistance is minimal (R_W), but the R_{AW} resistance in maximized ($R_{AB} + R_W$). Conversely, at the code 3Fh, the R_{AW} resistance is minimal (R_W), but the R_{BW} resistance in maximized ($R_{AB} + R_W$).

The resistance step size (R_S) equates to one LSb of the resistor.

Note:	To avoid damage to the internal wiper circuitry in this configuration, care should be taken to insure the current flow never exceeds 2.5 mA.

The change in wiper-to-end terminal resistance over temperature is shown in Figure 2-11, Figure 2-24, Figure 2-36 and Figure 2-48. The most variation over temperature will occur in the first few codes due to the wiper resistance coefficient affecting the total resistance. The remaining codes are dominated by the total resistance tempco R_{AB}.

6.1.2 POTENTIOMETER CONFIGURATION

When used as a potentiometer, all three terminals are tied to different nodes in the circuit. This allows the potentiometer to output a voltage proportional to the input voltage. This configuration is sometimes called voltage divider mode. The potentiometer is used to provide a variable voltage by adjusting the wiper position between the two endpoints as shown in Figure 6-3. Reversing the polarity of the A and B terminals will not affect operation.

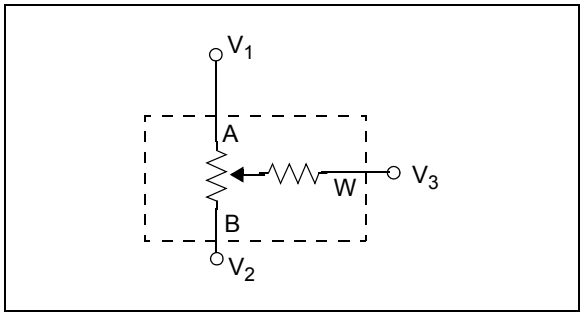

FIGURE 6-3: *Potentiometer Configuration.*

The temperature coefficient of the R_{AB} resistors is minimal by design. In this configuration, the resistors all change uniformly, so minimal variation should be seen.

The wiper resistor temperature coefficient is different from the R_{AB} temperature coefficient. The voltage at node V_3 (Figure 6-3) is not dependent on this wiper resistance, just the ratio of the R_{AB} resistors, so this temperature coefficient in most cases can be ignored.

Note:	To avoid damage to the internal wiper circuitry in this configuration, care should be taken to insure the current flow never exceeds 2.5 mA.

6.2 Wiper Resistance

Wiper resistance is the series resistance of the wiper. This resistance is typically measured when the wiper is positioned at either zero-scale (00h) or full-scale (3Fh).

The wiper resistance in potentiometer-generated voltage divider applications is not a significant source of error.

The wiper resistance in rheostat applications can create significant nonlinearity as the wiper is moved toward zero-scale (00h). The lower the nominal resistance, the greater the possible error.

Wiper resistance is significant depending on the devices operating voltage. As the device voltage decreases, the wiper resistance increases (see Figure 6-4 and Table 6-2).

In a rheostat configuration, this change in voltage needs to be taken into account, particularly for the lower resistance devices. For the 2.1 kΩ device, the maximum wiper resistance at 5.5V is approximately 6% of the total resistance, while at 2.7V, it is approximately 15.5% of the total resistance.

In a potentiometer configuration, the wiper resistance variation does not effect the output voltage seen on the terminal W pin.

The slope of the resistance has a linear area (at the higher voltages) and a nonlinear area (at the lower voltages), where resistance increases faster than the voltage drop (at low voltages).

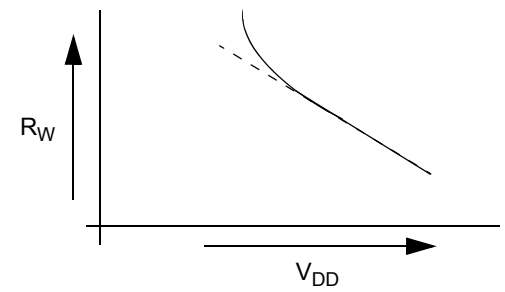

Note: The slope of the resistance has a linear area (at the higher voltages) and a nonlinear area (at the lower voltages).

FIGURE 6-4: *Relationship of Wiper Resistance (R_W) to Voltage.*

Since there is minimal variation of the total device resistance over voltage, at a constant temperature (see Figure 2-11, Figure 2-24, Figure 2-36 or Figure 2-48), the change in wiper resistance over voltage can have a significant impact on the INL and DNL error.

TABLE 6-2: TYPICAL STEP RESISTANCES AND RELATIONSHIP TO WIPER RESISTANCE

Resistance (Ω)					R_W / R_S (%) (1, 2)			R_W / R_{AB} (%) (1, 3)		
Typical		Wiper (R_W)								
Total (R_{AB})	Step (R_S)	Typical	Max @ 5.5V	Max @ 2.7V	R_W = Typical	R_W = Max @ 5.5V	R_W = Max @ 2.7V	R_W = Typical	R_W = Max @ 5.5V	R_W = Max @ 2.7V
2100	33.33	75	125	325	225.0%	375.0%	975.0%	3.57%	5.95%	15.48%
5000	79.37	75	125	325	94.5%	157.5%	409.5%	1.5%	2.50%	6.50%
10000	158.73	75	125	325	47.25%	78.75%	204.75%	0.75%	1.25%	3.25%
50000	793.65	75	125	325	9.45%	15.75%	40.95%	0.15%	0.25%	0.65%

Note 1: The wiper resistance (R_W) is not a significant source of error in potentiometer-generated voltage divider applications. In rheostat applications, the variation of the R_W value can create significant nonlinearity.

2: R_S is the typical value. The variation of this resistance is minimal over voltage.

3: R_{AB} is the typical value. The variation of this resistance is minimal over voltage.

© 2006-2017 Microchip Technology Inc.

6.3 Operational Characteristics

Understanding the operational characteristics of the device's resistor components is important to the system design.

6.3.1 ACCURACY

6.3.1.1 Integral Nonlinearity (INL)

INL error for these devices is the maximum deviation between an actual code transition point and its corresponding ideal transition point after offset and gain errors have been removed. These endpoints are from 0x00 to 0x3F. Refer to Figure 6-5.

Positive INL means higher resistance than ideal. Negative INL means lower resistance than ideal.

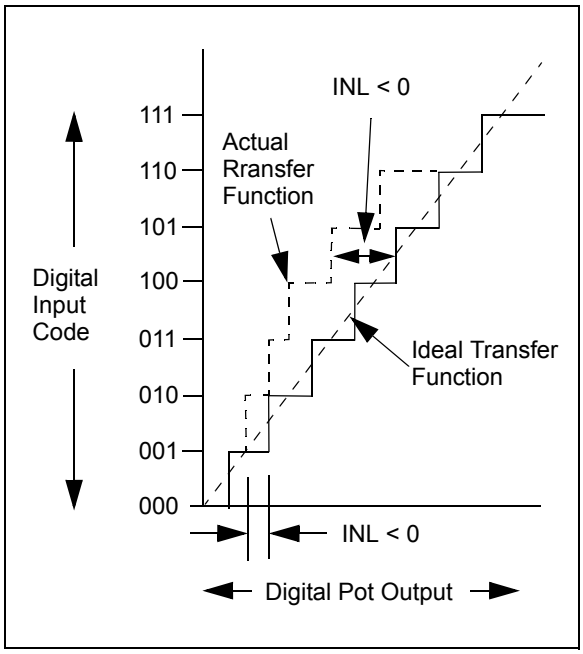

FIGURE 6-5: *INL Accuracy.*

6.3.1.2 Differential Nonlinearity (DNL)

DNL error is the measure of variations in code widths from the ideal code width. A DNL error of zero would imply that every code is exactly 1 LSb wide.

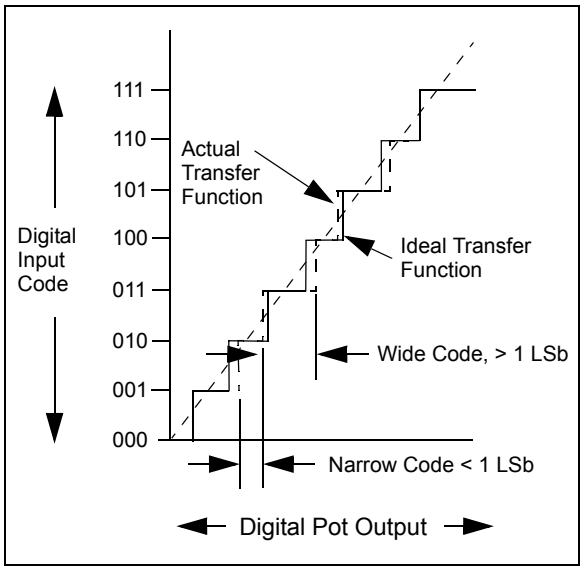

FIGURE 6-6: *DNL Accuracy.*

6.3.1.3 Ratiometric Temperature Coefficient

The ratiometric temperature coefficient quantifies the error in the ratio R_{AW}/R_{WB} due to temperature drift. This is typically the critical error when using a potentiometer device (MCP4011 and MCP4013) in a voltage divider configuration.

6.3.1.4 Absolute Temperature Coefficient

The absolute temperature coefficient quantifies the error in the end-to-end resistance (nominal resistance R_{AB}) due to temperature drift. This is typically the critical error when using a rheostat device (MCP4012 and MCP4014) in an adjustable resistor configuration.

6.3.2 MONOTONIC OPERATION

Monotonic operation means that the device's resistance increases with every step change (from terminal A to terminal B or terminal B to terminal A).

The wiper resistance is different at each tap location. When changing from one tap position to the next (either increasing or decreasing), the ΔR_W is less than the ΔR_S. When this change occurs, the device voltage and temperature are the same for the two tap positions.

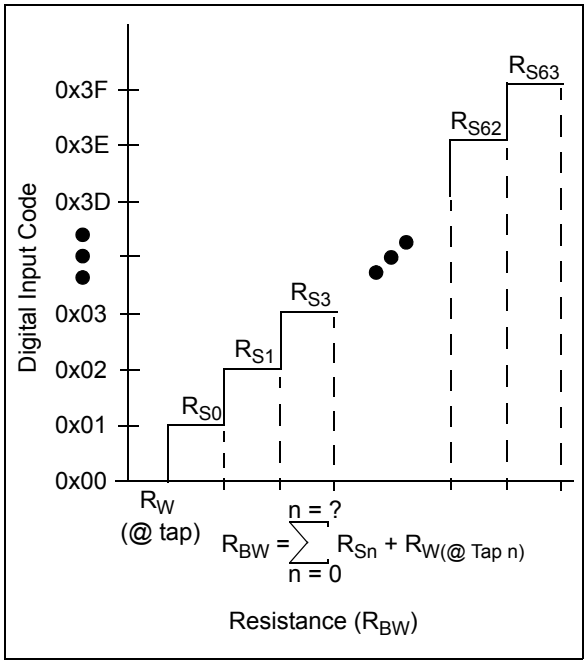

FIGURE 6-7: *Resistance R_{BW}.*

© 2006-2017 Microchip Technology Inc.

7.0 DESIGN CONSIDERATIONS

In the design of a system with the MCP401X devices, the following considerations should be taken into account:

- The Power Supply
- The Layout

7.1 Power Supply Considerations

The typical application will require a bypass capacitor in order to filter high-frequency noise, which can be induced onto the power supply's traces. The bypass capacitor helps to minimize the effect of these noise sources on signal integrity. Figure 7-1 illustrates an appropriate bypass strategy.

In this example, the recommended bypass capacitor value is 0.1 µF. This capacitor should be placed as close (within 4 mm) to the device power pin (V_{DD}) as possible.

The power source supplying these devices should be as clean as possible. If the application circuit has separate digital and analog power supplies, V_{DD} and V_{SS} should reside on the analog plane.

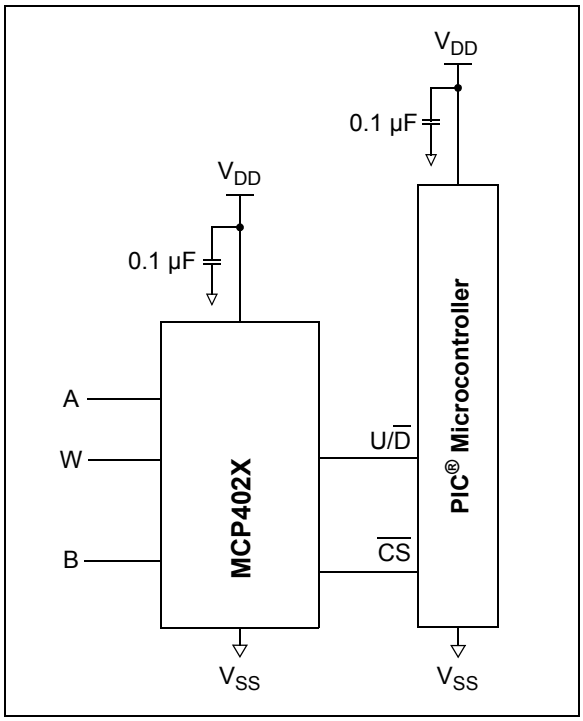

FIGURE 7-1: *Typical Microcontroller Connections.*

7.2 Layout Considerations

Inductively-coupled AC transients and digital switching noise can degrade the input and output signal integrity, potentially masking the MCP402X's performance. Careful board layout will minimize these effects and increase the Signal-to-Noise Ratio (SNR). Bench testing has shown that a multi-layer board utilizing a low-inductance ground plane, isolated inputs, isolated outputs and proper decoupling are critical to achieving the performance that the silicon is capable of providing. Particularly harsh environments may require shielding of critical signals.

If low noise is desired, breadboards and wire-wrapped boards are not recommended.

8.0 APPLICATIONS EXAMPLES

Nonvolatile digital potentiometers have a multitude of practical uses in modern electronic circuits. The most popular uses include precision calibration of set point thresholds, sensor trimming, LCD bias trimming, audio attenuation, adjustable power supplies, motor control overcurrent trip setting, adjustable gain amplifiers and offset trimming. The MCP4011/2/3/4 devices can be used to replace the common mechanical trim pot in applications where the operating and terminal voltages are within CMOS process limitations (V_{DD} = 2.7V to 5.5V).

8.1 Set Point Threshold Trimming

Applications that need accurate detection of an input threshold event often need several sources of error eliminated. Use of comparators and operational amplifiers (op amps) with low offset and gain error can help achieve the desired accuracy, but in many applications, the input source variation is beyond the designer's control. If the entire system can be calibrated after assembly in a controlled environment (like factory test), these sources of error are minimized, if not entirely eliminated.

Figure 8-1 illustrates a common digital potentiometer configuration. This configuration is often referred to as a "windowed voltage divider". Note that R_1 and R_2 are not necessary to create the voltage divider, but their presence is useful when the desired threshold has limited range. It is "windowed" because R_1 and R_2 can narrow the adjustable range of V_{TRIP} to a value much less than $V_{DD} - V_{SS}$. If the output range is reduced, the magnitude of each output step is reduced. This effectively increases the trimming resolution for a fixed digital potentiometer resolution. This technique may allow a lower-cost digital potentiometer to be utilized (64 steps instead of 256 steps).

The MCP4011's and MCP4013's low DNL performance is critical to meeting calibration accuracy in production without having to use a higher precision digital potentiometer.

EQUATION 8-1: CALCULATING THE WIPER SETTING FROM THE DESIRED V_{TRIP}

$$V_{TRIP} = V_{DD}\left(\frac{R_2 + R_{WB}}{R_1 + R_{AB} + R_2}\right)$$

$$R_{AB} = R_{Nominal}$$

$$R_{WB} = R_{AB} \bullet \left(\frac{D}{63}\right)$$

$$D = \left(\left(\frac{V_{TRIP}}{V_{DD}}\right) \bullet ((R_1 + R_{AB} + R_2) - R_2)\right) \bullet 63$$

Where:

D = Digital Potentiometer Wiper Setting (0-63)

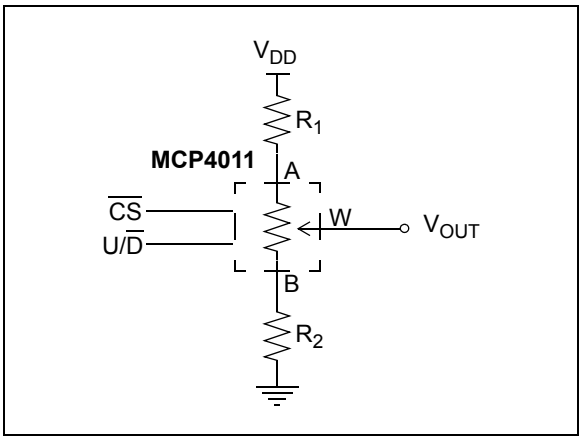

FIGURE 8-1: *Using the Digital Potentiometer to Set a Precise Output Voltage.*

8.1.1 TRIMMING A THRESHOLD FOR AN OPTICAL SENSOR

If the application has to calibrate the threshold of a diode, transistor or resistor, a variation range of 0.1V is common. Often, the desired resolution of 2 mV or better is adequate to accurately detect the presence of a precise signal. A "windowed" voltage divider, utilizing the MCP4011 or MCP4013, would be a potential solution as shown in Figure 8-2.

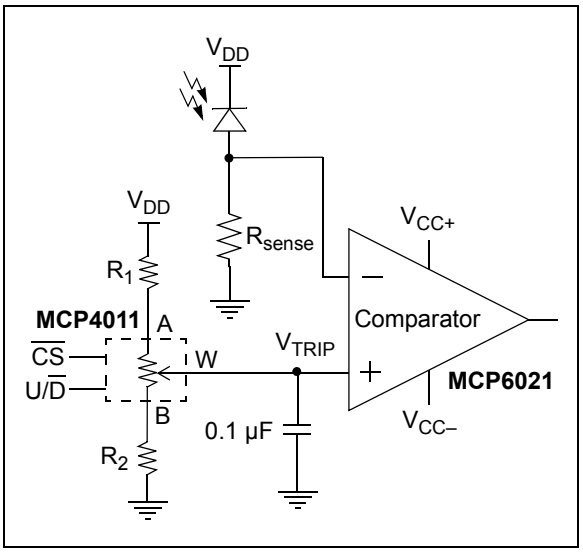

FIGURE 8-2: *Set Point or Threshold Calibration.*

© 2006-2017 Microchip Technology Inc.

8.2 Operational Amplifier Applications

Figure 8-3, Figure 8-4 and Figure 8-5 illustrate typical amplifier circuits that could replace fixed resistors with the MCP4011/2/3/4 to achieve digitally-adjustable analog solutions.

Figure 8-4 shows a circuit that allows a noninverting amplifier to have its' offset and gain to be independently trimmed. The MCP4011 is used along with resistors R_1 and R_2 to set the offset voltage. The sum of $R_1 + R_2$ resistance should be significantly greater (> 100 times) the resistance value of the MCP4011. This allows each increment or decrement in the MCP4011 to be a fine adjustment of the offset voltage. The input voltage of the op amp (V_{IN}) should be centered at the op amps V_w voltage. The gain is adjusted by the MCP4012. If the resistance value of the MCP4012 is small compared to the resistance value of R_3, then this is a fine adjustment of the gain. If the resistance value of the MCP4012 is equal (or large) compared to the resistance value of R_3, then this is a course adjustment of the gain. In general, trim the course adjustments first and then trim the fine adjustments.

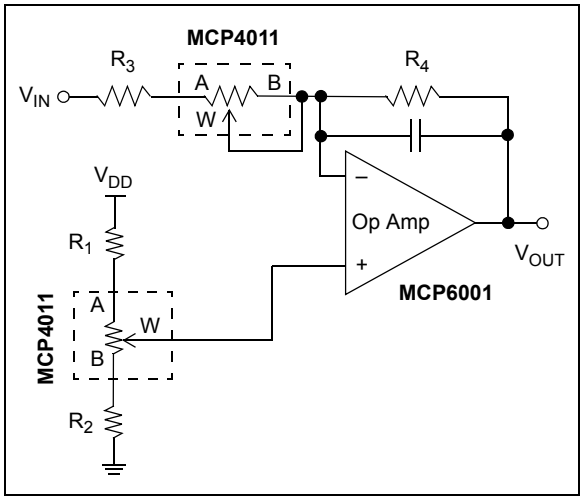

FIGURE 8-3: *Trimming Offset and Gain in an Inverting Amplifier.*

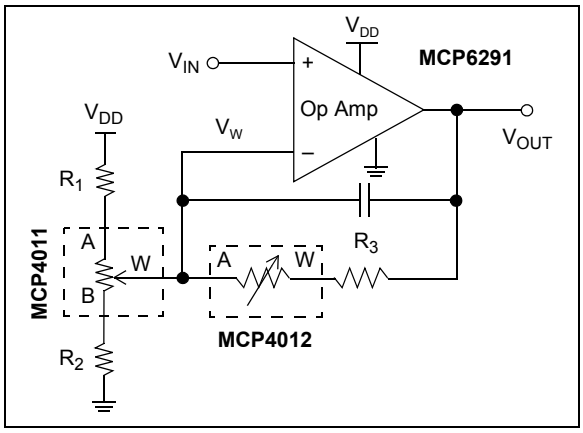

FIGURE 8-4: *Trimming Offset and Gain in a Noninverting Amplifier.*

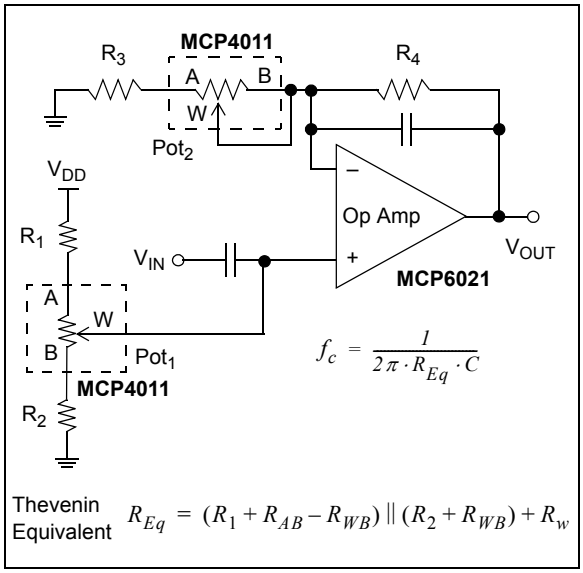

FIGURE 8-5: *Programmable Filter.*

8.3 Temperature Sensor Applications

Thermistors are resistors with very predictable variation with temperature. Thermistors are a popular sensor choice when a low-cost, temperature-sensing solution is desired. Unfortunately, thermistors have nonlinear characteristics that are undesirable, typically requiring trimming in an application to achieve greater accuracy. There are several common solutions to trim and linearize thermistors. Figure 8-6 and Figure 8-7 are simple methods for linearizing a 3-terminal NTC thermistor. Both are simple voltage dividers using a Positive Temperature Coefficient (PTC) resistor (R_1) with a transfer function capable of compensating for the linearity error in the Negative Temperature Coefficient (NTC) thermistor.

The circuit, illustrated by Figure 8-6, utilizes a digital rheostat for trimming the offset error caused by the thermistor's part-to-part variation. This solution puts the digital potentiometer's R_W into the voltage divider calculation. The MCP4011/2/3/4's R_{AB} temperature coefficient is 50 ppm (–20°C to +70°C). R_W's error is substantially greater than R_{AB}'s error because R_W varies with V_{DD}, wiper setting and temperature. For the 50 kΩ devices, the error introduced by R_W is, in most cases, insignificant as long as the wiper setting is > 6. For the 2 kΩ devices, the error introduced by R_W is significant because it is a higher percentage of R_{WB}. For these reasons, the circuit illustrated in Figure 8-6 is not the most optimum method for "exciting" and linearizing a thermistor.

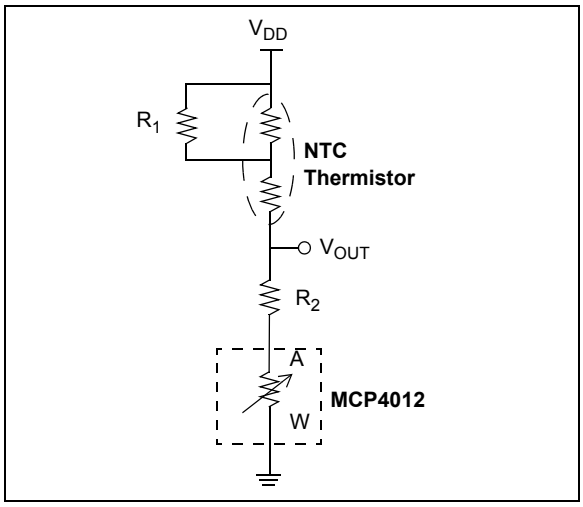

FIGURE 8-6: *Thermistor Calibration using a Digital Potentiometer in a Rheostat Configuration.*

The circuit illustrated by Figure 8-7 utilizes a digital potentiometer for trimming the offset error. This solution removes R_W from the trimming equation along with the error associated with R_W. R_2 is not required, but can be utilized to reduce the trimming "window" and reduce variation due to the digital potentiometer's R_{AB} part-to-part variability.

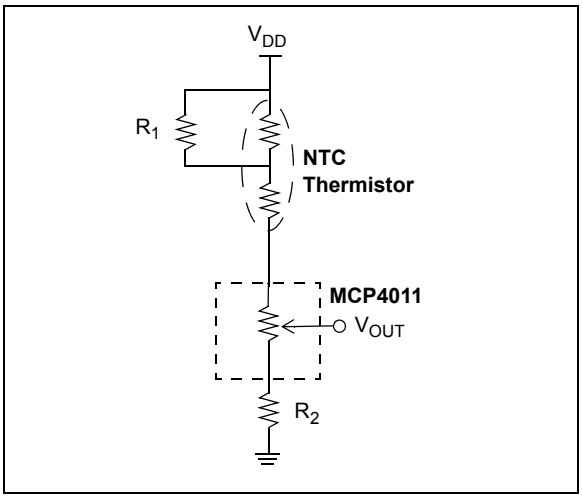

FIGURE 8-7: *Thermistor Calibration using a Digital Potentiometer in a Potentiometer Configuration.*

8.4 Wheatstone Bridge Trimming

Another common configuration to "excite" a sensor (such as a strain gauge, pressure sensor or thermistor) is the Wheatstone bridge configuration. The Wheatstone bridge provides a differential output instead of a single-ended output. Figure 8-8 illustrates a Wheatstone bridge utilizing one to three digital potentiometers. The digital potentiometers in this example are used to trim the offset and gain of the Wheatstone bridge.

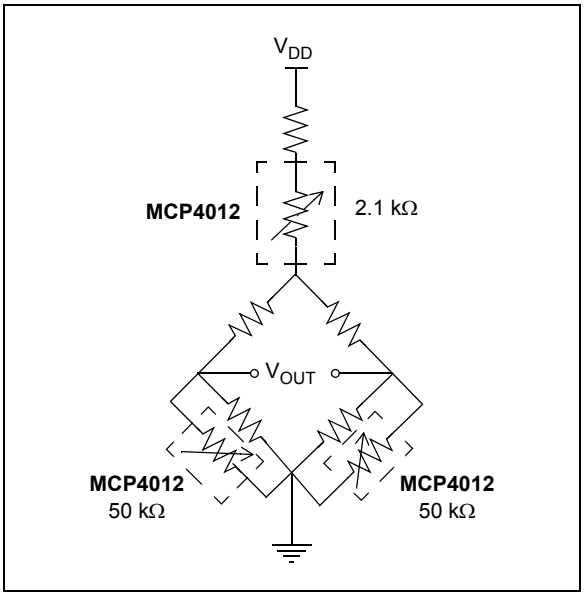

FIGURE 8-8: *Wheatstone Bridge Trimming.*

© 2006-2017 Microchip Technology Inc.

9.0 DEVELOPMENT SUPPORT

9.1 Evaluation/Demonstration Boards

Currently there are three boards that are available that can be used to evaluate the MCP401X family of devices.

1. The MCP402X Digital Potentiometer Evaluation Board kit (MCP402XEV) contains a simple demonstration board utilizing a PIC10F206, the MCP401X and a blank PCB, which can be populated with any desired MCP4011/2/3/4 device in a SOT-23-5, SOT-23-6 or 150 mil SOIC 8-pin package.

   This board has two push buttons to control when the PIC® microcontroller generates MCP402X serial commands. The example firmware demonstrates the following commands:

   - Increment
   - Decrement
   - High-Voltage Increment and Enable WiperLock Technology
   - High-Voltage Decrement and Enable WiperLock Technology
   - High-Voltage Increment and Disable WiperLock Technology
   - High-Voltage Decrement and Disable WiperLock Technology

   The populated board (with the MCP4011) can be used to evaluate the other MCP401X devices by appropriately jumpering the PCB pads.
2. The SOT-23-5/6 Evaluation Board (VSUPEV2) can be used to evaluate the characteristics of the MCP4012, MCP4013 and MCP4014 devices.
3. The 8-pin SOIC/MSOP/TSSOP/DIP Evaluation Board (SOIC8EV) can be used to evaluate the characteristics of the MCP4011 device in either the SOIC or MSOP package.
4. The MCP4XXX Digital Potentiometer Daughter Board allows the system designer to quickly evaluate the operation of Microchip Technology's MCP42XXX and MCP402X Digital Potentiometers. The board supports two MCP42XXX devices and an MCP402X device, which can be replaced with an MCP401X device.

   The board also has a voltage doubler device (TC1240A), which can be used to show the WiperLock Technology feature of the MCP4021.

These boards may be purchased directly from the Microchip web site at www.microchip.com.

10.0 PACKAGING INFORMATION

10.1 Package Marking Information

5-Lead SOT-23 (**MCP4014**)

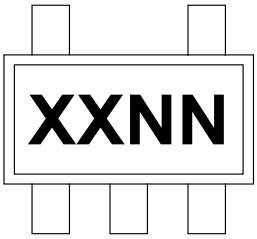

Example:

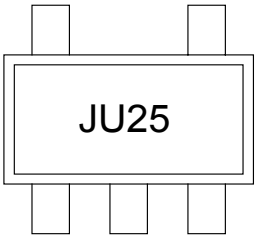

Part Number	Code
MCP4014T-202E/OT	JUNN
MCP4014T-502E/OT	JVNN
MCP4014T-103E/OT	JWNN
MCP4014T-503E/OT	JXNN

Note: Applies to 5-Lead SOT-23

6-Lead SOT-23 (**MCP4012 / MCP4013**)

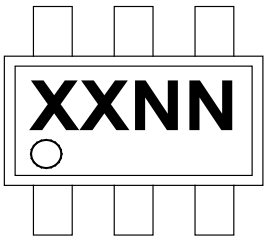

Example:

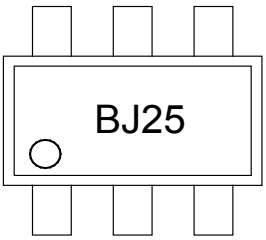

Part Number	Code	
	MCP401**2**	MCP401**3**
MCP401**x**T-202E/CH	BJNN	BPNN
MCP401**x**T-502E/CH	BKNN	BQNN
MCP401**x**T-103E/CH	BLNN	BRNN
MCP401**x**T-503E/CH	BMNN	BSNN

Note: Applies to 6-Lead SOT-23

Legend:	XX...X	Customer-specific information
	Y	Year code (last digit of calendar year)
	YY	Year code (last 2 digits of calendar year)
	WW	Week code (week of January 1 is week ‘01’)
	NNN	Alphanumeric traceability code
	(e3)	Pb-free JEDEC designator for Matte Tin (Sn)
	*	This package is Pb-free. The Pb-free JEDEC designator ((e3)) can be found on the outer packaging for this package.

Note: In the event the full Microchip part number cannot be marked on one line, it will be carried over to the next line, thus limiting the number of available characters for customer-specific information.

© 2006-2017 Microchip Technology Inc.

Package Marking Information

8-Lead DFN (2x3) **(MCP4011)**

Example:

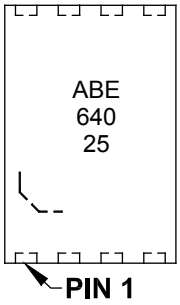

Part Number	Code
MCP4011T-202E/MC	ABE
MCP4011T-502E/MC	ABF
MCP4011T-103E/MC	ABG
MCP4011T-503E/MC	ABH

Note: Applies to 8-Lead DFN

8-Lead MSOP **(MCP4011)**

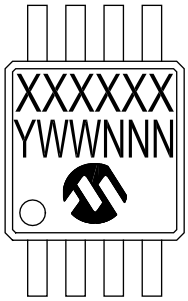

Example:

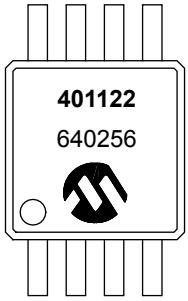

8-Lead SOIC (150 mil) **(MCP4011)**

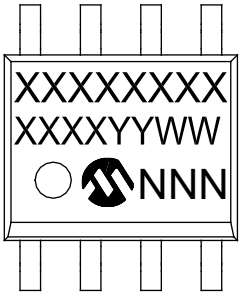

Example:

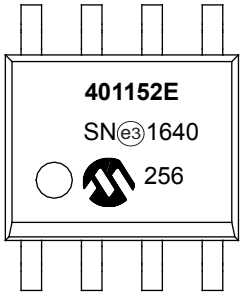

Part Numbers		Code
8L-MSOP	8L-SOIC	
MCP4011-202E/MS	MCP4011-202E/SN	22
MCP4011-502E/MS	MCP4011-502E/SN	52
MCP4011-103E/MS	MCP4011-103E/SN	13
MCP4011-503E/MS	MCP4011-503E/SN	53

5-Lead Plastic Small Outline Transistor (OT) [SOT23]

Note: For the most current package drawings, please see the Microchip Packaging Specification located at http://www.microchip.com/packaging

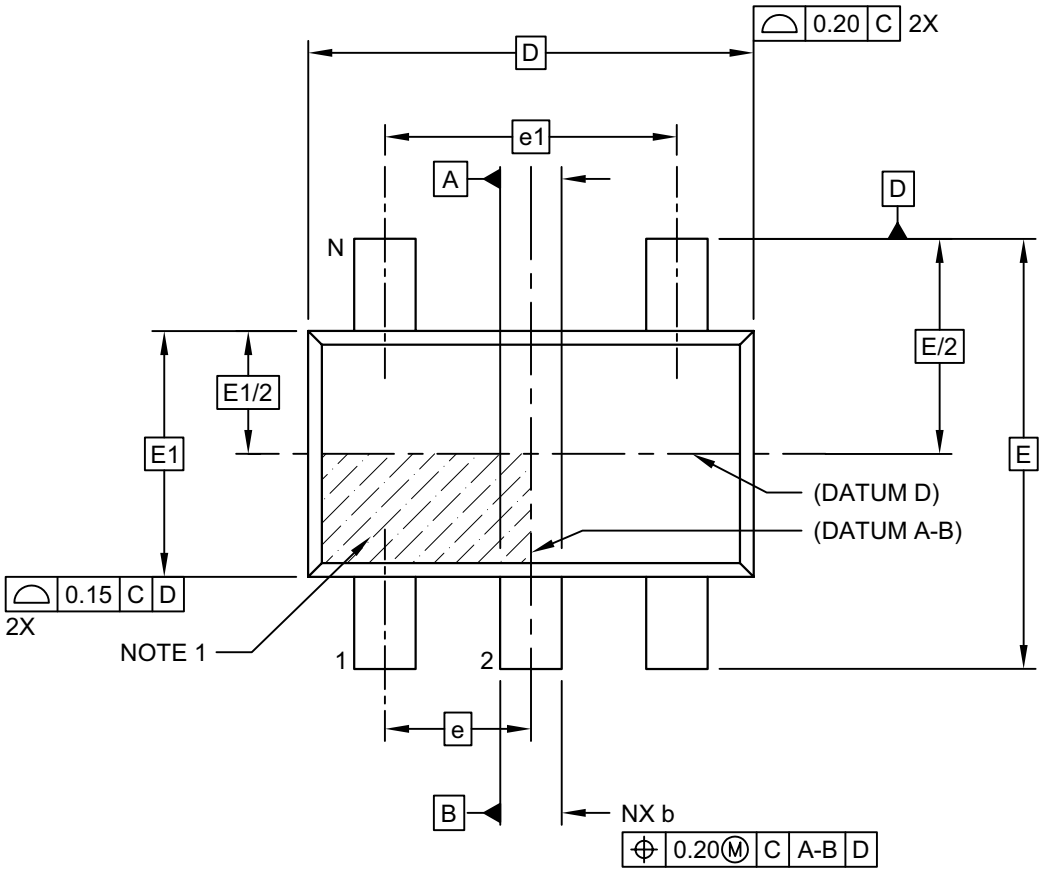

TOP VIEW

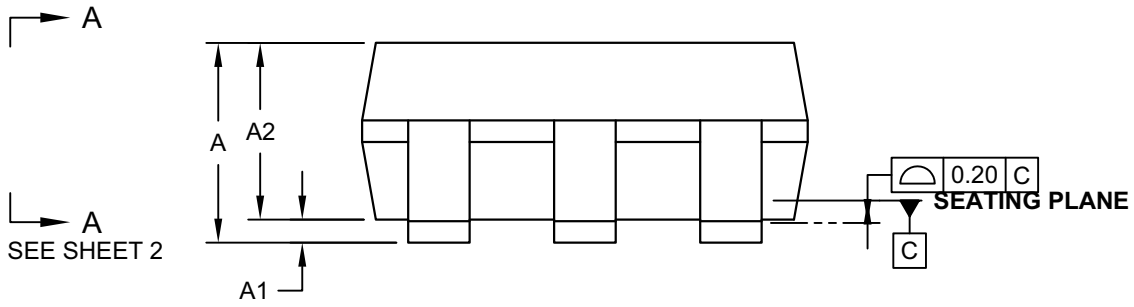

SIDE VIEW

Microchip Technology Drawing C04-028D [OT] Sheet 1 of 2

© 2006-2017 Microchip Technology Inc.

5-Lead Plastic Small Outline Transistor (OT) [SOT23]

Note: For the most current package drawings, please see the Microchip Packaging Specification located at http://www.microchip.com/packaging

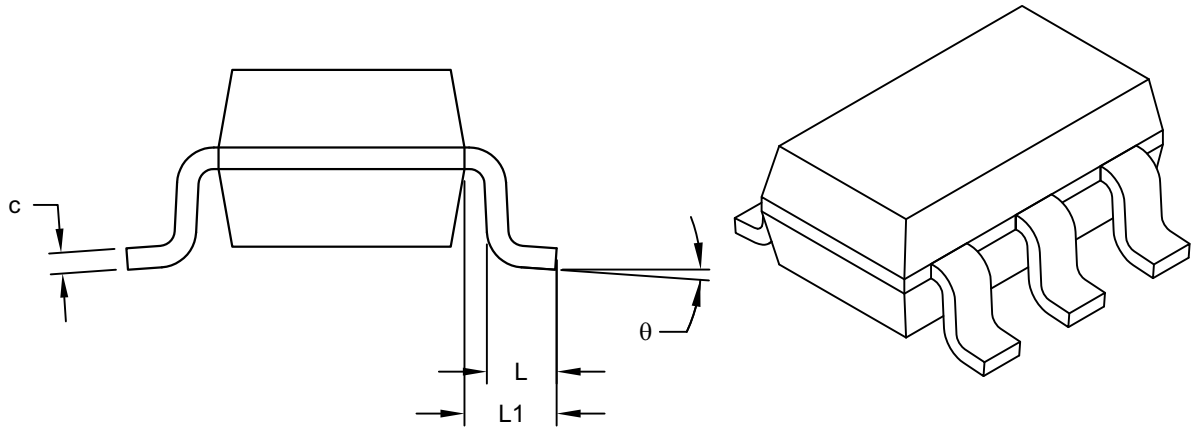

VIEW A-A
SHEET 1

Units		MILLIMETERS		
Dimension Limits		MIN	NOM	MAX
Number of Pins	N	6		
Pitch	e	0.95 BSC		
Outside lead pitch	e1	1.90 BSC		
Overall Height	A	0.90	-	1.45
Molded Package Thickness	A2	0.89	-	1.30
Standoff	A1	-	-	0.15
Overall Width	E	2.80 BSC		
Molded Package Width	E1	1.60 BSC		
Overall Length	D	2.90 BSC		
Foot Length	L	0.30	-	0.60
Footprint	L1	0.60 REF		
Foot Angle	ϕ	0°	-	10°
Lead Thickness	c	0.08	-	0.26
Lead Width	b	0.20	-	0.51

Notes:
1. Dimensions D and E1 do not include mold flash or protrusions. Mold flash or protrusions shall not exceed 0.25mm per side.
2. Dimensioning and tolerancing per ASME Y14.5M
   BSC: Basic Dimension. Theoretically exact value shown without tolerances.
   REF: Reference Dimension, usually without tolerance, for information purposes only.

Microchip Technology Drawing C04-091D [OT] Sheet 2 of 2

5-Lead Plastic Small Outline Transistor (OT) [SOT23]

Note: For the most current package drawings, please see the Microchip Packaging Specification located at http://www.microchip.com/packaging

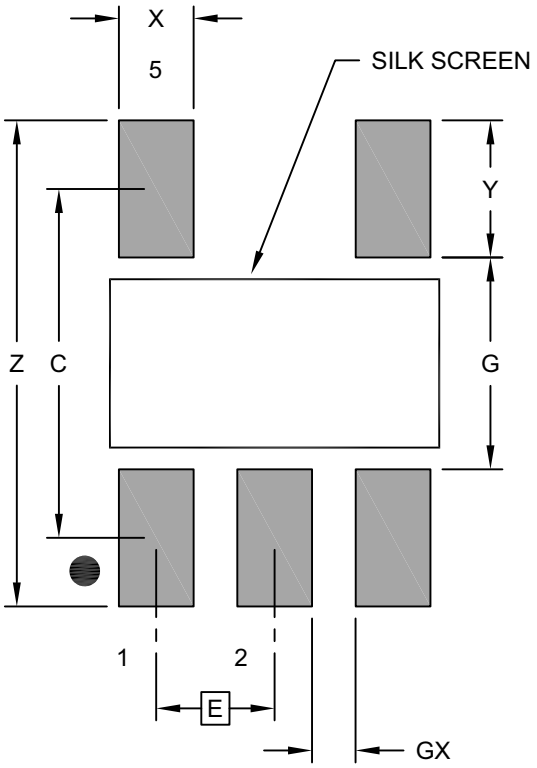

RECOMMENDED LAND PATTERN

Units		MILLIMETERS		
Dimension Limits		MIN	NOM	MAX
Contact Pitch	E		0.95 BSC	
Contact Pad Spacing	C		2.80	
Contact Pad Width (X5)	X			0.60
Contact Pad Length (X5)	Y			1.10
Distance Between Pads	G	1.70		
Distance Between Pads	GX	0.35		
Overall Width	Z			3.90

Notes:

1. Dimensioning and tolerancing per ASME Y14.5M

   BSC: Basic Dimension. Theoretically exact value shown without tolerances.

Microchip Technology Drawing No. C04-2091A [OT]

© 2006-2017 Microchip Technology Inc.

6-Lead Plastic Small Outline Transistor (CH, CHY) [SOT-23]

Note: For the most current package drawings, please see the Microchip Packaging Specification located at http://www.microchip.com/packaging

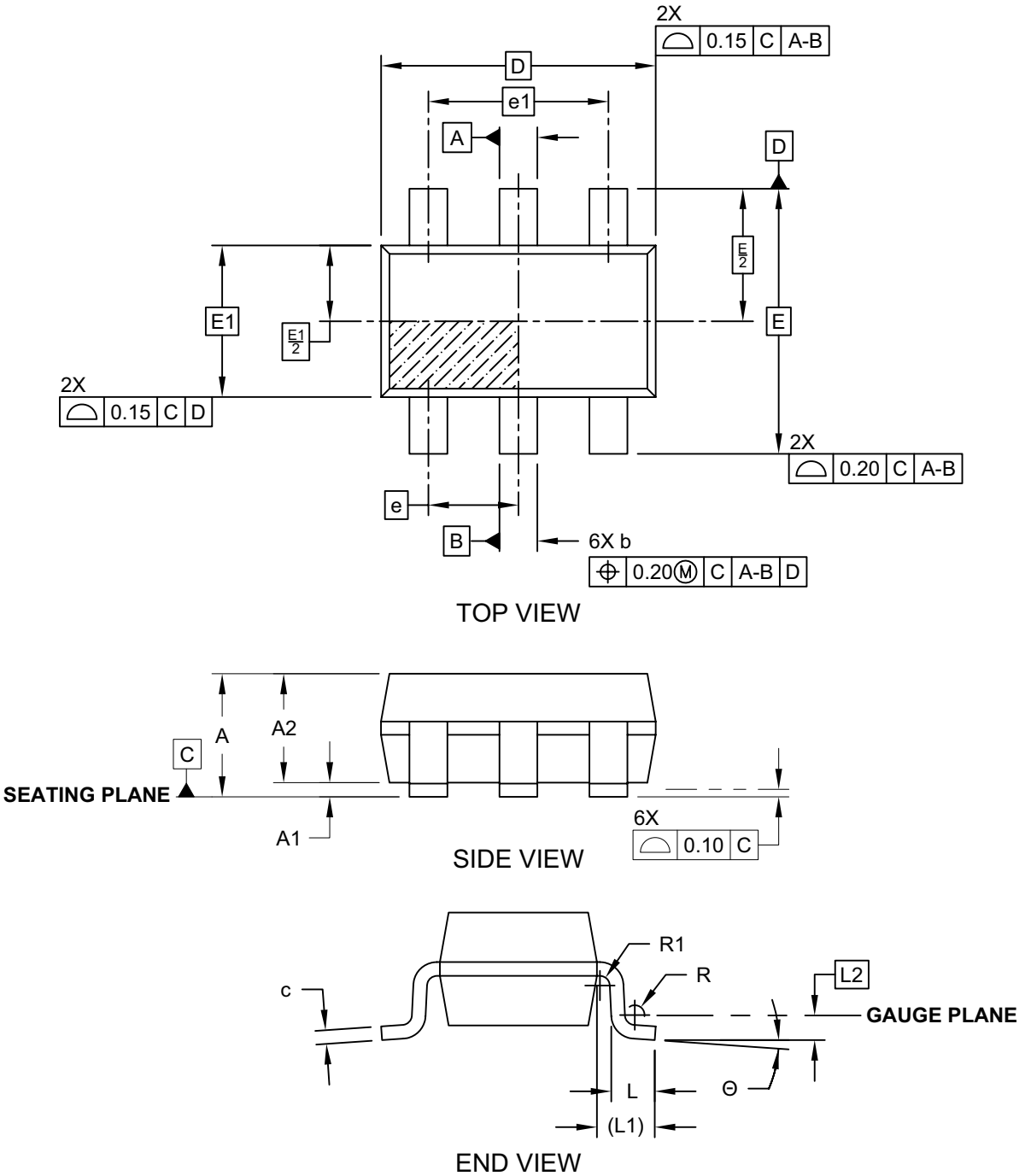

Microchip Technology Drawing C04-028C (CH) Sheet 1 of 2

6-Lead Plastic Small Outline Transistor (CH, CHY) [SOT-23]

Note: For the most current package drawings, please see the Microchip Packaging Specification located at http://www.microchip.com/packaging

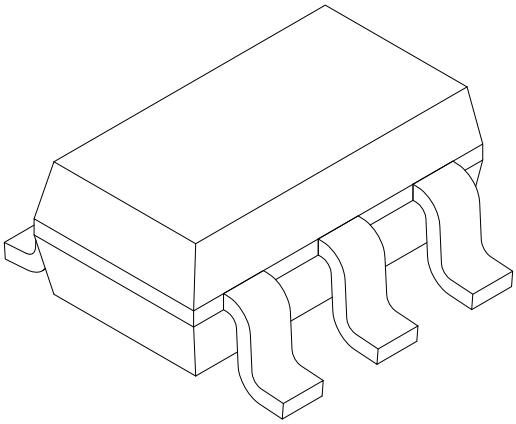

Units		MILLIMETERS		
Dimension Limits		MIN	NOM	MAX
Number of Leads	N	6		
Pitch	e	0.95 BSC		
Outside lead pitch	e1	1.90 BSC		
Overall Height	A	0.90	-	1.45
Molded Package Thickness	A2	0.89	1.15	1.30
Standoff	A1	0.00	-	0.15
Overall Width	E	2.80 BSC		
Molded Package Width	E1	1.60 BSC		
Overall Length	D	2.90 BSC		
Foot Length	L	0.30	0.45	0.60
Footprint	L1	0.60 REF		
Seating Plane to Gauge Plane	L1	0.25 BSC		
Foot Angle	ϕ	0°	-	10°
Lead Thickness	c	0.08	-	0.26
Lead Width	b	0.20	-	0.51

Notes:

1. Dimensions D and E1 do not include mold flash or protrusions. Mold flash or protrusions shall not exceed 0.25mm per side.
2. Dimensioning and tolerancing per ASME Y14.5M
   BSC: Basic Dimension. Theoretically exact value shown without tolerances.
   REF: Reference Dimension, usually without tolerance, for information purposes only.

Microchip Technology Drawing C04-028C (CH) Sheet 2 of 2

© 2006-2017 Microchip Technology Inc.

6-Lead Plastic Small Outline Transistor (CH, CHY) [SOT-23]

Note: For the most current package drawings, please see the Microchip Packaging Specification located at http://www.microchip.com/packaging

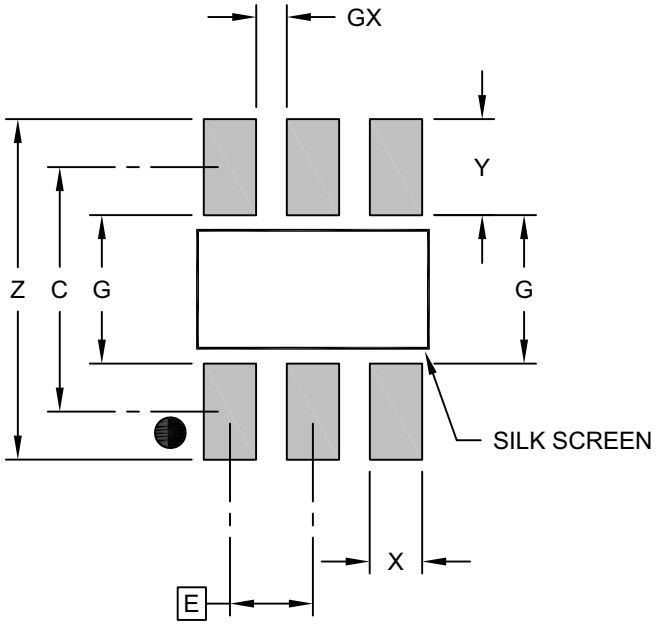

RECOMMENDED LAND PATTERN

Units		MILLIMETERS		
Dimension Limits		MIN	NOM	MAX
Contact Pitch	E		0.95 BSC	
Contact Pad Spacing	C		2.80	
Contact Pad Width (X3)	X			0.60
Contact Pad Length (X3)	Y			1.10
Distance Between Pads	G	1.70		
Distance Between Pads	GX	0.35		
Overall Width	Z			3.90

Notes:

1. Dimensioning and tolerancing per ASME Y14.5M
   BSC: Basic Dimension. Theoretically exact value shown without tolerances.

Microchip Technology Drawing No. C04-2028B (CH)

8-Lead Plastic Dual Flat, No Lead Package (MC) – 2x3x0.9 mm Body [DFN]

Note: For the most current package drawings, please see the Microchip Packaging Specification located at http://www.microchip.com/packaging

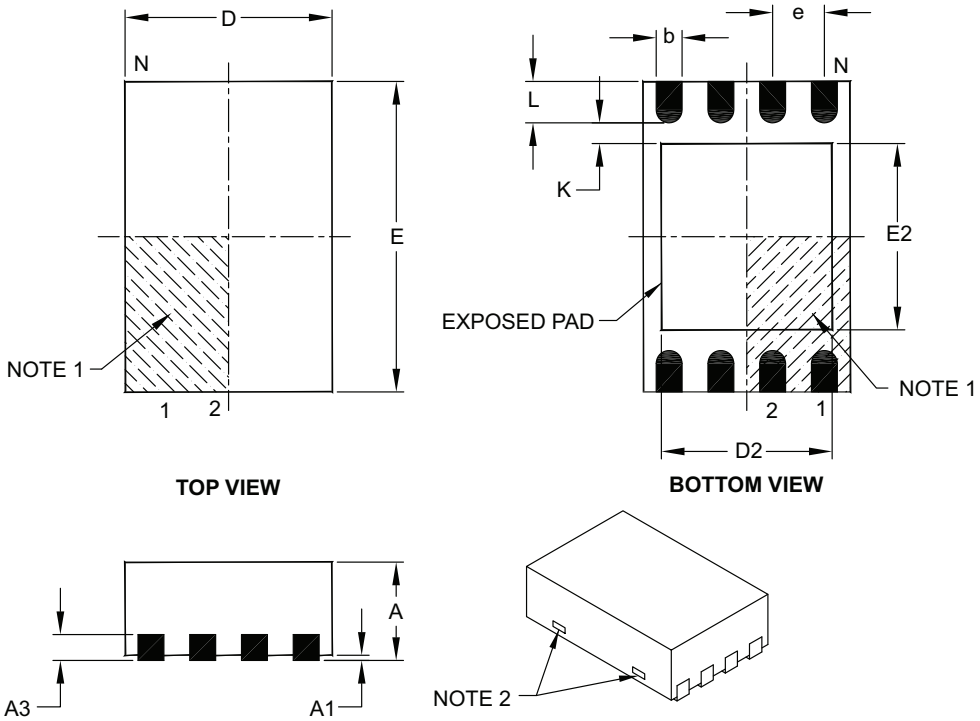

Units		MILLIMETERS		
Dimension Limits		MIN	NOM	MAX
Number of Pins	N	8		
Pitch	e	0.50 BSC		
Overall Height	A	0.80	0.90	1.00
Standoff	A1	0.00	0.02	0.05
Contact Thickness	A3	0.20 REF		
Overall Length	D	2.00 BSC		
Overall Width	E	3.00 BSC		
Exposed Pad Length	D2	1.30	–	1.55
Exposed Pad Width	E2	1.50	–	1.75
Contact Width	b	0.20	0.25	0.30
Contact Length	L	0.30	0.40	0.50
Contact-to-Exposed Pad	K	0.20	–	–

Notes:

1. Pin 1 visual index feature may vary, but must be located within the hatched area.
2. Package may have one or more exposed tie bars at ends.
3. Package is saw singulated.
4. Dimensioning and tolerancing per ASME Y14.5M.
   BSC: Basic Dimension. Theoretically exact value shown without tolerances.
   REF: Reference Dimension, usually without tolerance, for information purposes only.

Microchip Technology Drawing C04-123C

© 2006-2017 Microchip Technology Inc.

8-Lead Plastic Dual Flat, No Lead Package (MC) - 2x3x0.9mm Body [DFN]

Note: For the most current package drawings, please see the Microchip Packaging Specification located at http://www.microchip.com/packaging

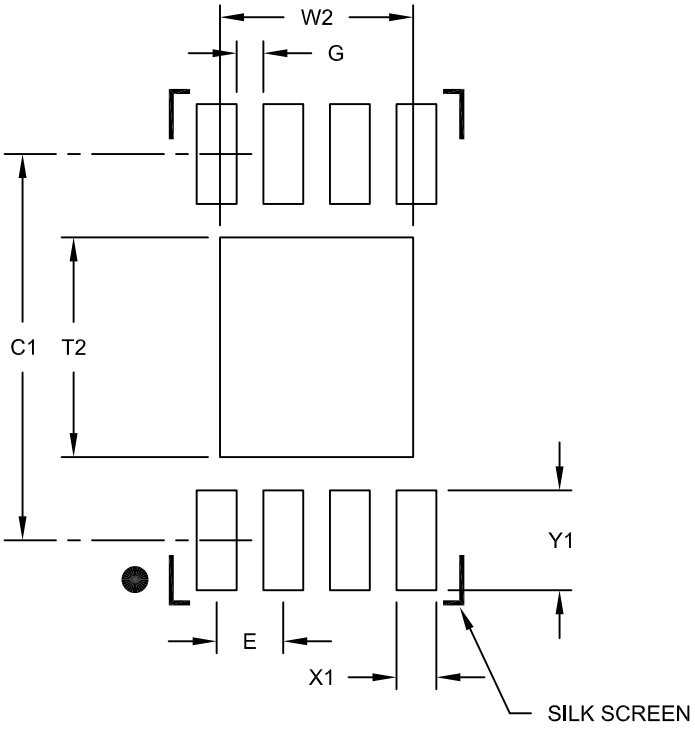

RECOMMENDED LAND PATTERN

Units		MILLIMETERS		
Dimension Limits		MIN	NOM	MAX
Contact Pitch	E		0.50 BSC	
Optional Center Pad Width	W2			1.45
Optional Center Pad Length	T2			1.75
Contact Pad Spacing	C1		2.90	
Contact Pad Width (X8)	X1			0.30
Contact Pad Length (X8)	Y1			0.75
Distance Between Pads	G	0.20		

Notes:

1. Dimensioning and tolerancing per ASME Y14.5M
   BSC: Basic Dimension. Theoretically exact value shown without tolerances.

Microchip Technology Drawing No. C04-2123B

8-Lead Plastic Micro Small Outline Package (MS) [MSOP]

Note: For the most current package drawings, please see the Microchip Packaging Specification located at http://www.microchip.com/packaging

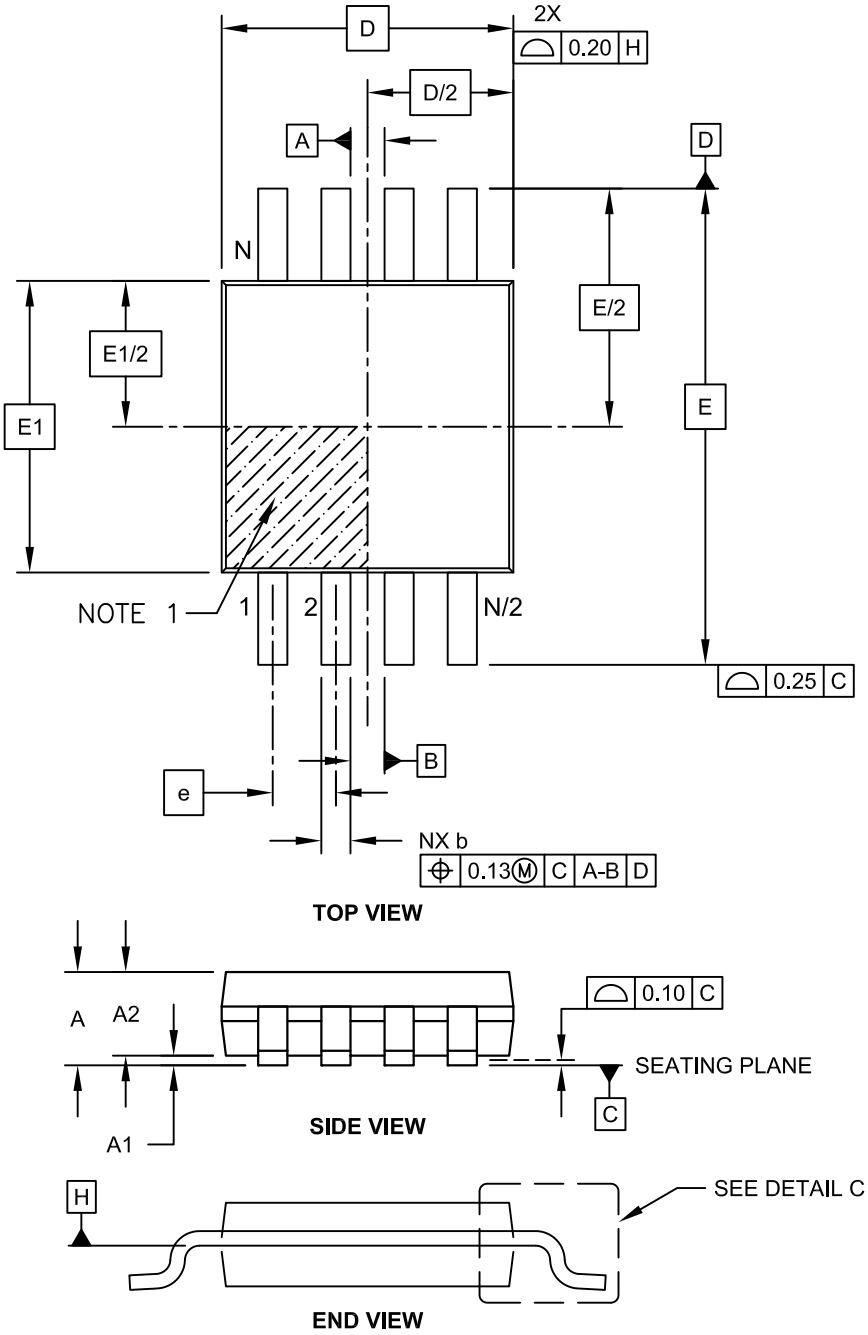

Microchip Technology Drawing C04-111C Sheet 1 of 2

© 2006-2017 Microchip Technology Inc.

8-Lead Plastic Micro Small Outline Package (MS) [MSOP]

Note: For the most current package drawings, please see the Microchip Packaging Specification located at http://www.microchip.com/packaging

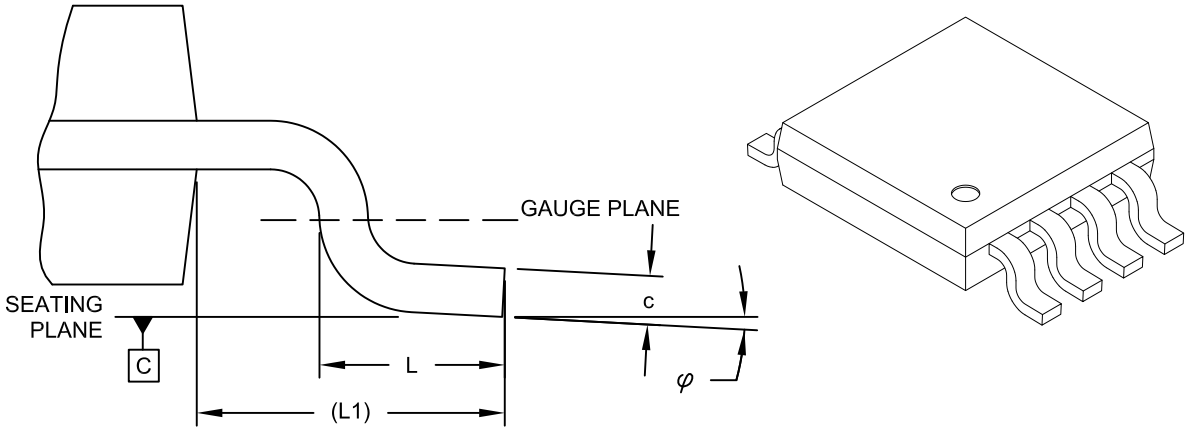

DETAIL C

Units		MILLIMETERS		
Dimension Limits		MIN	NOM	MAX
Number of Pins	N		8	
Pitch	e		0.65 BSC	
Overall Height	A	-	-	1.10
Molded Package Thickness	A2	0.75	0.85	0.95
Standoff	A1	0.00	-	0.15
Overall Width	E		4.90 BSC	
Molded Package Width	E1		3.00 BSC	
Overall Length	D		3.00 BSC	
Foot Length	L	0.40	0.60	0.80
Footprint	L1		0.95 REF	
Foot Angle	φ	0°	-	8°
Lead Thickness	c	0.08	-	0.23
Lead Width	b	0.22	-	0.40

Notes:

1. Pin 1 visual index feature may vary, but must be located within the hatched area.
2. Dimensions D and E1 do not include mold flash or protrusions. Mold flash or protrusions shall not exceed 0.15mm per side.
3. Dimensioning and tolerancing per ASME Y14.5M.
   BSC: Basic Dimension. Theoretically exact value shown without tolerances.
   REF: Reference Dimension, usually without tolerance, for information purposes only.

Microchip Technology Drawing C04-111C Sheet 2 of 2

8-Lead Plastic Micro Small Outline Package (MS) [MSOP]

Note: For the most current package drawings, please see the Microchip Packaging Specification located at http://www.microchip.com/packaging

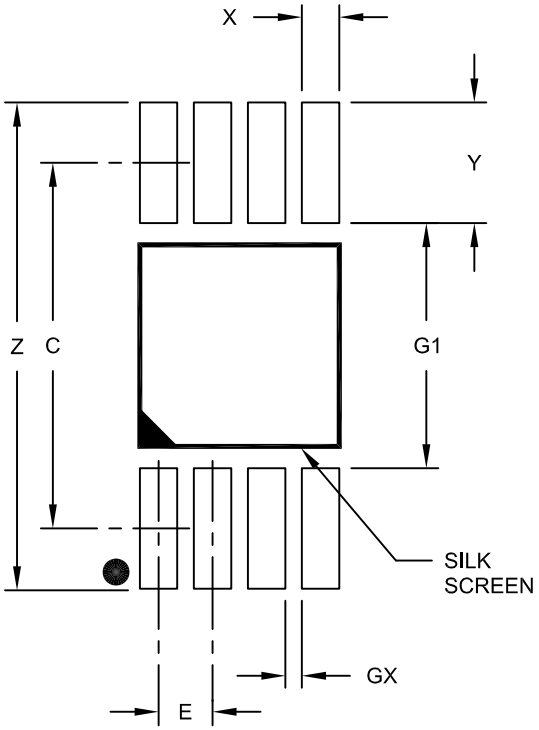

RECOMMENDED LAND PATTERN

Units		MILLIMETERS		
Dimension Limits		MIN	NOM	MAX
Contact Pitch	E		0.65 BSC	
Contact Pad Spacing	C		4.40	
Overall Width	Z			5.85
Contact Pad Width (X8)	X1			0.45
Contact Pad Length (X8)	Y1			1.45
Distance Between Pads	G1	2.95		
Distance Between Pads	GX	0.20		

Notes:

1. Dimensioning and tolerancing per ASME Y14.5M

BSC: Basic Dimension. Theoretically exact value shown without tolerances.

Microchip Technology Drawing No. C04-2111A

© 2006-2017 Microchip Technology Inc.

8-Lead Plastic Small Outline (SN) - Narrow, 3.90 mm (.150 In.) Body [SOIC]

Note: For the most current package drawings, please see the Microchip Packaging Specification located at http://www.microchip.com/packaging

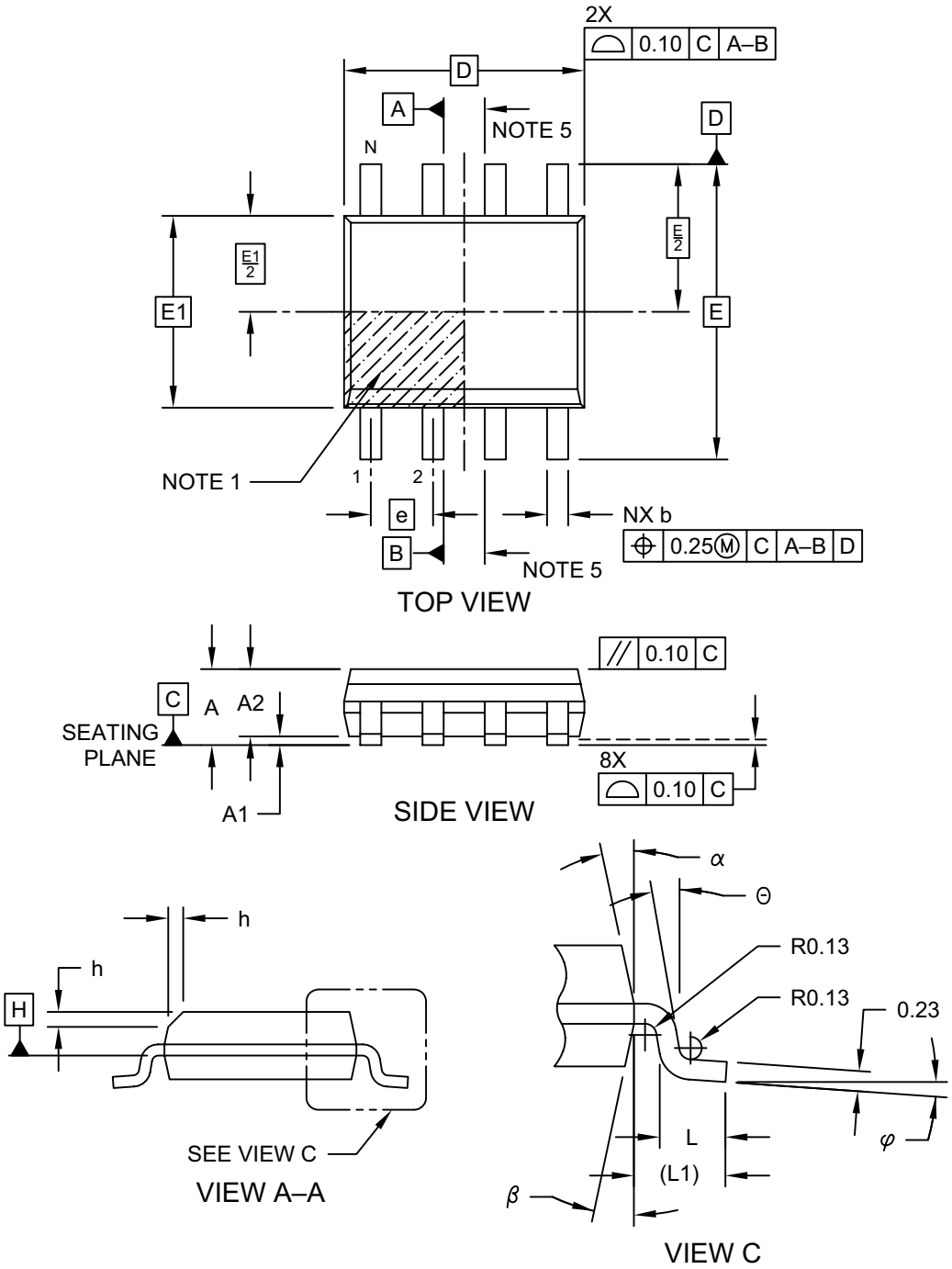

Microchip Technology Drawing No. C04-057-SN Rev D Sheet 1 of 2

8-Lead Plastic Small Outline (SN) - Narrow, 3.90 mm (.150 In.) Body [SOIC]

Note: For the most current package drawings, please see the Microchip Packaging Specification located at http://www.microchip.com/packaging

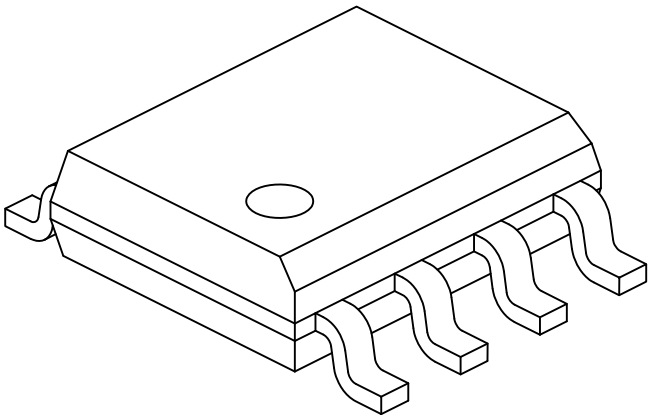

Units		MILLIMETERS		
Dimension Limits		MIN	NOM	MAX
Number of Pins	N	8		
Pitch	e	1.27 BSC		
Overall Height	A	-	-	1.75
Molded Package Thickness	A2	1.25	-	-
Standoff §	A1	0.10	-	0.25
Overall Width	E	6.00 BSC		
Molded Package Width	E1	3.90 BSC		
Overall Length	D	4.90 BSC		
Chamfer (Optional)	h	0.25	-	0.50
Foot Length	L	0.40	-	1.27
Footprint	L1	1.04 REF		
Foot Angle	φ	0°	-	8°
Lead Thickness	c	0.17	-	0.25
Lead Width	b	0.31	-	0.51
Mold Draft Angle Top	α	5°	-	15°
Mold Draft Angle Bottom	β	5°	-	15°

Notes:

1. Pin 1 visual index feature may vary, but must be located within the hatched area.
2. § Significant Characteristic
3. Dimensions D and E1 do not include mold flash or protrusions. Mold flash or protrusions shall not exceed 0.15mm per side.
4. Dimensioning and tolerancing per ASME Y14.5M
   BSC: Basic Dimension. Theoretically exact value shown without tolerances.
   REF: Reference Dimension, usually without tolerance, for information purposes only.
5. Datums A & B to be determined at Datum H.

Microchip Technology Drawing No. C04-057-SN Rev D Sheet 2 of 2

© 2006-2017 Microchip Technology Inc.

8-Lead Plastic Small Outline (SN) - Narrow, 3.90 mm Body [SOIC]

Note: For the most current package drawings, please see the Microchip Packaging Specification located at http://www.microchip.com/packaging

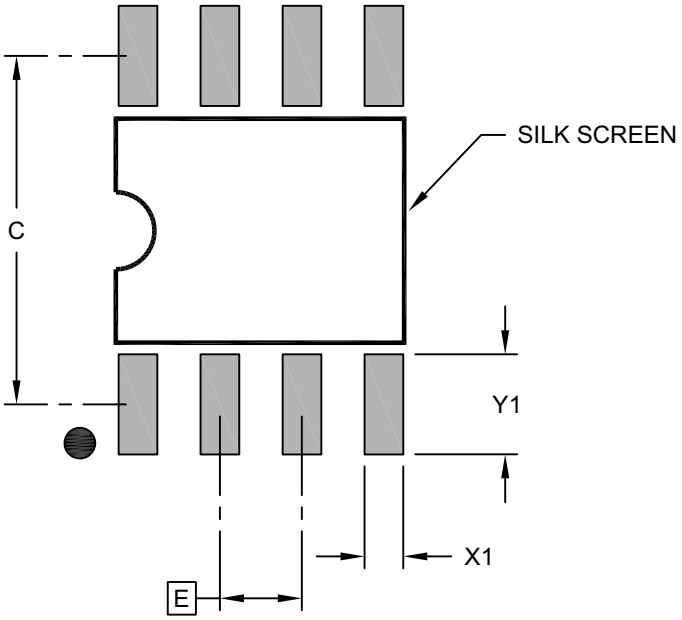

RECOMMENDED LAND PATTERN

Units		MILLIMETERS		
Dimension Limits		MIN	NOM	MAX
Contact Pitch	E	1.27 BSC		
Contact Pad Spacing	C		5.40	
Contact Pad Width (X8)	X1			0.60
Contact Pad Length (X8)	Y1			1.55

Notes:

1. Dimensioning and tolerancing per ASME Y14.5M
   BSC: Basic Dimension. Theoretically exact value shown without tolerances.

Microchip Technology Drawing C04-2057-SN Rev B

NOTES:

© 2006-2017 Microchip Technology Inc.

APPENDIX A: REVISION HISTORY

Revision D (December 2017)

The following is the list of modifications:

1. Updated the High-Voltage Input Entry Voltage entry in the **"AC/DC Characteristics"** table.
2. Updated **Table 6-1"Typical Step Resistances"**.

Revision C (December 2006)

The following is the list of modifications:

1. Added device designators in conditions column to associate units (MHz) in Bandwidth -3 dB parameter in **"AC/DC Characteristics"** table.
2. Added device designations in conditions column for R-INL and R-DNL specifications.

Revision B (October 2006)

The following is the list of modifications:

1. For the 10 kΩ device, the rheostat differential nonlinearity specification at 2.7V was changed from ±0.5 LSb to ±1 LSb.
2. Figure 2-9 in **Section 2.0 "Typical Performance Curves"** was updated with the correct data.
3. Added Figure 2-55 for -3 db Bandwidth information.
4. Added Figure 2-56 for -3 db Bandwidth test circuit.
5. Updated available Development Tools.
6. Added disclaimer to package outline drawings and updated changed drawings as needed.

Revision A (November 2005)

- Original release of this document.

NOTES:

© 2006-2017 Microchip Technology Inc.

PRODUCT IDENTIFICATION SYSTEM

To order or obtain information, e.g., on pricing or delivery, refer to the factory or the listed sales office.

PART NO.	XXX	X	/XX
Device	Resistance Version	Temperature Range	Package

Device:	MCP4011:	Single Potentiometer with U/$\overline{D}$ Interface
	MCP4011T:	Single Potentiometer with U/$\overline{D}$ Interface (Tape and Reel) (SOIC, MSOP)
	MCP4012:	Single Rheostat with U/$\overline{D}$ interface
	MCP4012T:	Single Rheostat with U/$\overline{D}$ interface (Tape and Reel) (SOT-23-6)
	MCP4013:	Single Potentiometer to GND with U/$\overline{D}$ Interface
	MCP4013T:	Single Potentiometer to GND with U/$\overline{D}$ Interface (Tape and Reel) (SOT-23-6)
	MCP4014:	Single Rheostat to GND with U/$\overline{D}$ Interface
	MCP4014T:	Single Rheostat to GND with U/$\overline{D}$ Interface (Tape and Reel)(SOT-23-5)
Resistance Version:	202 = 2.1 kΩ	
	502 = 5 kΩ	
	103 = 10 kΩ	
	503 = 50 kΩ	
Temperature Range:		
Package:	CH = Plastic Small Outline Transistor, 6-lead	
	MC = Plastic Dual Flat No Lead (2x3x0.9 mm), 8-lead	
	MS = Plastic MSOP, 8-lead	
	SN = Plastic SOIC, (150 mil Body), 8-lead	
	OT = Plastic Small Outline Transistor, 5-lead	

Examples:

a)	MCP4011-103E/MS:	10 kΩ, 8-LD MSOP
b)	MCP4011-103E/SN:	10 kΩ, 8-LD SOIC
c)	MCP4011T-103E/MC:	T/R, 10 kΩ, 8-LD DFN
d)	MCP4011T-103E/MS:	T/R, 10 kΩ, 8-LD MSOP
e)	MCP4011T-103E/SN:	T/R, 10 kΩ, 8-LD SOIC
f)	MCP4011-202E/MS:	2.1 kΩ, 8-LD MSOP
g)	MCP4011-202E/SN:	2.1 kΩ, 8-LD SOIC
h)	MCP4011T-202E/MC:	T/R, 2.1 kΩ, 8-LD DFN
i)	MCP4011T-202E/MS:	T/R, 2.1 kΩ, 8-LD MSOP
j)	MCP4011T-202E/SN:	T/R, 2.1 kΩ, 8-LD SOIC
k)	MCP4011-502E/MS:	5 kΩ, 8-LD MSOP
l)	MCP4011-502E/SN:	5 kΩ, 8-LD SOIC
m)	MCP4011T-502E/MC:	T/R, 5 kΩ, 8-LD DFN
n)	MCP4011T-502E/MS:	T/R, 5 kΩ, 8-LD MSOP
o)	MCP4011T-502E/SN:	T/R, 5 kΩ, 8-LD SOIC
p)	MCP4011-503E/MS:	50 kΩ, 8-LD MSOP
q)	MCP4011-503E/SN:	50 kΩ, 8-LD SOIC
r)	MCP4011T-503E/MC:	T/R, 50 kΩ, 8-LD DFN
s)	MCP4011T-503E/MS:	T/R, 50 kΩ, 8-LD MSOP
t)	MCP4011T-503E/SN:	T/R, 50 kΩ, 8-LD SOIC
a)	MCP4012T-202E/CH	2.1 kΩ, 6-LD SOT-23
b)	MCP4012T-502E/CH	5 kΩ, 6-LD SOT-23
c)	MCP4012T-103E/CH	10 kΩ, 6-LD SOT-23
d)	MCP4012T-503E/CH	50 kΩ, 6-LD SOT-23
a)	MCP4013T-202E/CH	2.1 kΩ, 6-LD SOT-23
b)	MCP4013T-502E/CH	5 kΩ, 6-LD SOT-23
c)	MCP4013T-103E/CH	10 kΩ, 6-LD SOT-23
d)	MCP4013T-503E/CH	50 kΩ, 6-LD SOT-23
a)	MCP4014T-202E/OT	2.1 kΩ, 5-LD SOT-23
b)	MCP4014T-502E/OT	5 kΩ, 5-LD SOT-23
c)	MCP4014T-103E/OT	10 kΩ, 5-LD SOT-23
d)	MCP4014T-503E/OT	50 kΩ, 5-LD SOT-23

NOTES:

© 2006-2017 Microchip Technology Inc.

Note the following details of the code protection feature on Microchip devices:

- Microchip products meet the specification contained in their particular Microchip Data Sheet.
- Microchip believes that its family of products is one of the most secure families of its kind on the market today, when used in the intended manner and under normal conditions.
- There are dishonest and possibly illegal methods used to breach the code protection feature. All of these methods, to our knowledge, require using the Microchip products in a manner outside the operating specifications contained in Microchip's Data Sheets. Most likely, the person doing so is engaged in theft of intellectual property.
- Microchip is willing to work with the customer who is concerned about the integrity of their code.
- Neither Microchip nor any other semiconductor manufacturer can guarantee the security of their code. Code protection does not mean that we are guaranteeing the product as "unbreakable."

Code protection is constantly evolving. We at Microchip are committed to continuously improving the code protection features of our products. Attempts to break Microchip's code protection feature may be a violation of the Digital Millennium Copyright Act. If such acts allow unauthorized access to your software or other copyrighted work, you may have a right to sue for relief under that Act.

Information contained in this publication regarding device applications and the like is provided only for your convenience and may be superseded by updates. It is your responsibility to ensure that your application meets with your specifications. MICROCHIP MAKES NO REPRESENTATIONS OR WARRANTIES OF ANY KIND WHETHER EXPRESS OR IMPLIED, WRITTEN OR ORAL, STATUTORY OR OTHERWISE, RELATED TO THE INFORMATION, INCLUDING BUT NOT LIMITED TO ITS CONDITION, QUALITY, PERFORMANCE, MERCHANTABILITY OR FITNESS FOR PURPOSE**.** Microchip disclaims all liability arising from this information and its use. Use of Microchip devices in life support and/or safety applications is entirely at the buyer's risk, and the buyer agrees to defend, indemnify and hold harmless Microchip from any and all damages, claims, suits, or expenses resulting from such use. No licenses are conveyed, implicitly or otherwise, under any Microchip intellectual property rights unless otherwise stated.

Microchip received ISO/TS-16949:2009 certification for its worldwide headquarters, design and wafer fabrication facilities in Chandler and Tempe, Arizona; Gresham, Oregon and design centers in California and India. The Company's quality system processes and procedures are for its PIC® MCUs and dsPIC® DSCs, KEELOQ® code hopping devices, Serial EEPROMs, microperipherals, nonvolatile memory and analog products. In addition, Microchip's quality system for the design and manufacture of development systems is ISO 9001:2000 certified.

QUALITY MANAGEMENT SYSTEM
CERTIFIED BY DNV
═ ISO/TS 16949 ═

Trademarks

The Microchip name and logo, the Microchip logo, AnyRate, AVR, AVR logo, AVR Freaks, BeaconThings, BitCloud, CryptoMemory, CryptoRF, dsPIC, FlashFlex, flexPWR, Heldo, JukeBlox, KEELOQ, KEELOQ logo, Kleer, LANCheck, LINK MD, maXStylus, maXTouch, MediaLB, megaAVR, MOST, MOST logo, MPLAB, OptoLyzer, PIC, picoPower, PICSTART, PIC32 logo, Prochip Designer, QTouch, RightTouch, SAM-BA, SpyNIC, SST, SST Logo, SuperFlash, tinyAVR, UNI/O, and XMEGA are registered trademarks of Microchip Technology Incorporated in the U.S.A. and other countries.

ClockWorks, The Embedded Control Solutions Company, EtherSynch, Hyper Speed Control, HyperLight Load, IntelliMOS, mTouch, Precision Edge, and Quiet-Wire are registered trademarks of Microchip Technology Incorporated in the U.S.A.

Adjacent Key Suppression, AKS, Analog-for-the-Digital Age, Any Capacitor, AnyIn, AnyOut, BodyCom, chipKIT, chipKIT logo, CodeGuard, CryptoAuthentication, CryptoCompanion, CryptoController, dsPICDEM, dsPICDEM.net, Dynamic Average Matching, DAM, ECAN, EtherGREEN, In-Circuit Serial Programming, ICSP, Inter-Chip Connectivity, JitterBlocker, KleerNet, KleerNet logo, Mindi, MiWi, motorBench, MPASM, MPF, MPLAB Certified logo, MPLIB, MPLINK, MultiTRAK, NetDetach, Omniscient Code Generation, PICDEM, PICDEM.net, PICkit, PICtail, PureSilicon, QMatrix, RightTouch logo, REAL ICE, Ripple Blocker, SAM-ICE, Serial Quad I/O, SMART-I.S., SQI, SuperSwitcher, SuperSwitcher II, Total Endurance, TSHARC, USBCheck, VariSense, ViewSpan, WiperLock, Wireless DNA, and ZENA are trademarks of Microchip Technology Incorporated in the U.S.A. and other countries.

SQTP is a service mark of Microchip Technology Incorporated in the U.S.A.

Silicon Storage Technology is a registered trademark of Microchip Technology Inc. in other countries.

GestIC is a registered trademark of Microchip Technology Germany II GmbH & Co. KG, a subsidiary of Microchip Technology Inc., in other countries.

All other trademarks mentioned herein are property of their respective companies.

© 2017, Microchip Technology Incorporated, All Rights Reserved.

ISBN: 978-1-5224-2437-6

Worldwide Sales and Service

AMERICAS

Corporate Office
2355 West Chandler Blvd.
Chandler, AZ 85224-6199
Tel: 480-792-7200
Fax: 480-792-7277
Technical Support:
http://www.microchip.com/support
Web Address:
www.microchip.com

Atlanta
Duluth, GA
Tel: 678-957-9614
Fax: 678-957-1455

Austin, TX
Tel: 512-257-3370

Boston
Westborough, MA
Tel: 774-760-0087
Fax: 774-760-0088

Chicago
Itasca, IL
Tel: 630-285-0071
Fax: 630-285-0075

Dallas
Addison, TX
Tel: 972-818-7423
Fax: 972-818-2924

Detroit
Novi, MI
Tel: 248-848-4000

Houston, TX
Tel: 281-894-5983

Indianapolis
Noblesville, IN
Tel: 317-773-8323
Fax: 317-773-5453
Tel: 317-536-2380

Los Angeles
Mission Viejo, CA
Tel: 949-462-9523
Fax: 949-462-9608
Tel: 951-273-7800

Raleigh, NC
Tel: 919-844-7510

New York, NY
Tel: 631-435-6000

San Jose, CA
Tel: 408-735-9110
Tel: 408-436-4270

Canada - Toronto
Tel: 905-695-1980
Fax: 905-695-2078

ASIA/PACIFIC

Australia - Sydney
Tel: 61-2-9868-6733

China - Beijing
Tel: 86-10-8569-7000

China - Chengdu
Tel: 86-28-8665-5511

China - Chongqing
Tel: 86-23-8980-9588

China - Dongguan
Tel: 86-769-8702-9880

China - Guangzhou
Tel: 86-20-8755-8029

China - Hangzhou
Tel: 86-571-8792-8115

China - Hong Kong SAR
Tel: 852-2943-5100

China - Nanjing
Tel: 86-25-8473-2460

China - Qingdao
Tel: 86-532-8502-7355

China - Shanghai
Tel: 86-21-3326-8000

China - Shenyang
Tel: 86-24-2334-2829

China - Shenzhen
Tel: 86-755-8864-2200

China - Suzhou
Tel: 86-186-6233-1526

China - Wuhan
Tel: 86-27-5980-5300

China - Xian
Tel: 86-29-8833-7252

China - Xiamen
Tel: 86-592-2388138

China - Zhuhai
Tel: 86-756-3210040

ASIA/PACIFIC

India - Bangalore
Tel: 91-80-3090-4444

India - New Delhi
Tel: 91-11-4160-8631

India - Pune
Tel: 91-20-4121-0141

Japan - Osaka
Tel: 81-6-6152-7160

Japan - Tokyo
Tel: 81-3-6880- 3770

Korea - Daegu
Tel: 82-53-744-4301

Korea - Seoul
Tel: 82-2-554-7200

Malaysia - Kuala Lumpur
Tel: 60-3-7651-7906

Malaysia - Penang
Tel: 60-4-227-8870

Philippines - Manila
Tel: 63-2-634-9065

Singapore
Tel: 65-6334-8870

Taiwan - Hsin Chu
Tel: 886-3-577-8366

Taiwan - Kaohsiung
Tel: 886-7-213-7830

Taiwan - Taipei
Tel: 886-2-2508-8600

Thailand - Bangkok
Tel: 66-2-694-1351

Vietnam - Ho Chi Minh
Tel: 84-28-5448-2100

EUROPE

Austria - Wels
Tel: 43-7242-2244-39
Fax: 43-7242-2244-393

Denmark - Copenhagen
Tel: 45-4450-2828
Fax: 45-4485-2829

Finland - Espoo
Tel: 358-9-4520-820

France - Paris
Tel: 33-1-69-53-63-20
Fax: 33-1-69-30-90-79

Germany - Garching
Tel: 49-8931-9700

Germany - Haan
Tel: 49-2129-3766400

Germany - Heilbronn
Tel: 49-7131-67-3636

Germany - Karlsruhe
Tel: 49-721-625370

Germany - Munich
Tel: 49-89-627-144-0
Fax: 49-89-627-144-44

Germany - Rosenheim
Tel: 49-8031-354-560

Israel - Ra'anana
Tel: 972-9-744-7705

Italy - Milan
Tel: 39-0331-742611
Fax: 39-0331-466781

Italy - Padova
Tel: 39-049-7625286

Netherlands - Drunen
Tel: 31-416-690399
Fax: 31-416-690340

Norway - Trondheim
Tel: 47-7289-7561

Poland - Warsaw
Tel: 48-22-3325737

Romania - Bucharest
Tel: 40-21-407-87-50

Spain - Madrid
Tel: 34-91-708-08-90
Fax: 34-91-708-08-91

Sweden - Gothenberg
Tel: 46-31-704-60-40

Sweden - Stockholm
Tel: 46-8-5090-4654

UK - Wokingham
Tel: 44-118-921-5800
Fax: 44-118-921-5820

© 2006-2017 Microchip Technology Inc.