Rating	1.5A. 250V, 3A. 125V AC
Contact Resistance	50m ohm max.
Insulation Resistance	DC 500V 100M ohm min.
Dielectric Strength	AC 1000V 1 minute

BASE COLOR: Black

BUTTON COLOR: Red

Mounting Hole

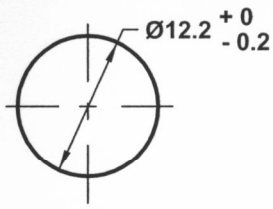

Cut-Out 4mm thk. max.

Circuit Diagram

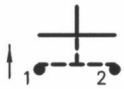

SPST OFF - (ON)

( )= Momentary

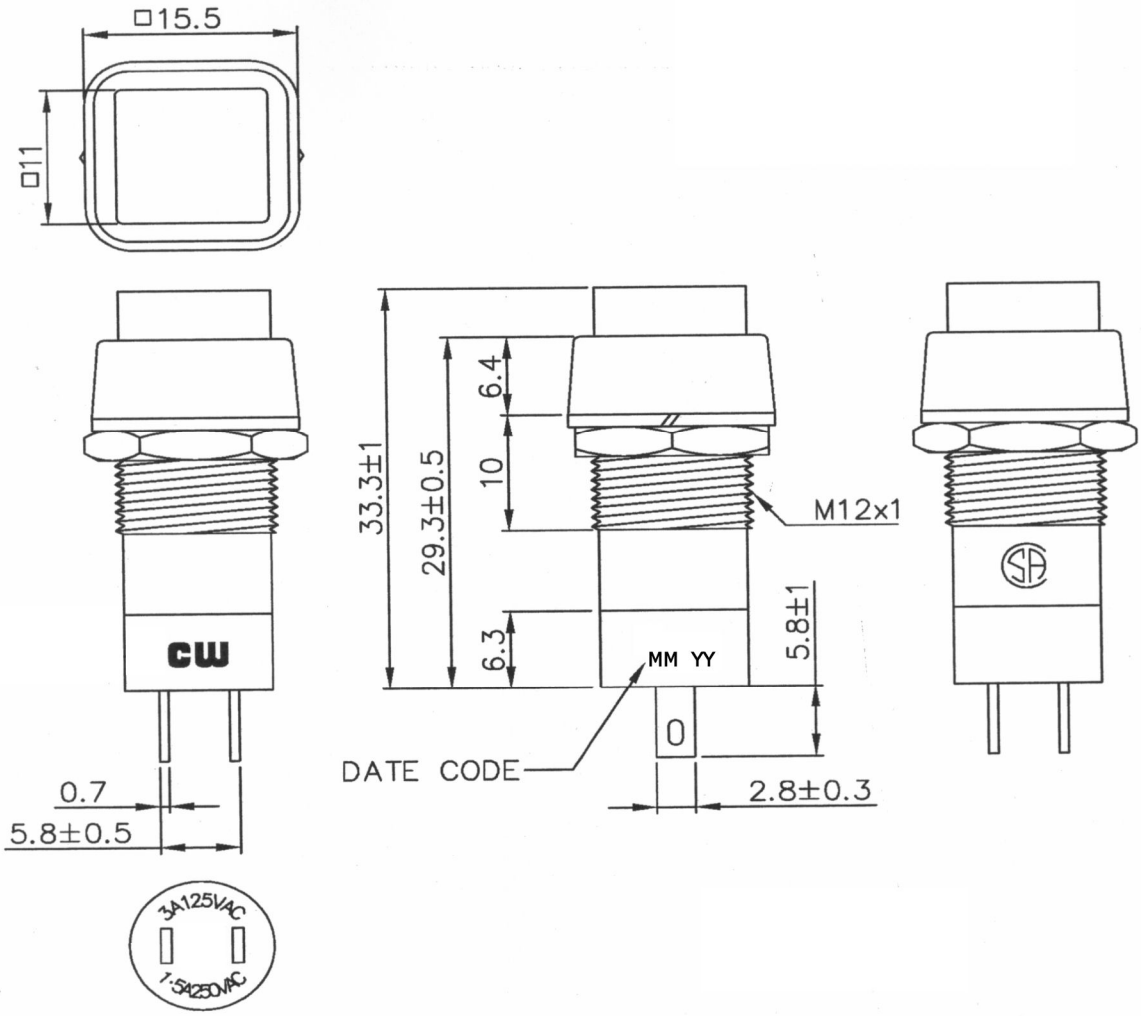

RoHS Compliant

CW INDUSTRIES Southampton, Pa. 18966 Tel 215.355.7080/www.cwind.com	Date Drawn: 12/23/09	Rev. 0	Unit: mm	Checked By: G. Guld
	Title: PUSH BUTTON SWITCH		CW P/N: GPB023A05BR	

THIS INFORMATION IS CONFIDENTIAL AND PROPRIETARY TO CW INDUSTRIES INCORPORATED AND ITS AFFILIATES. IT MAY NOT BE DISCLOSED TO ANYONE, OTHER THAN CW INDUSTRIES PERSONNEL, WITHOUT WRITTEN AUTHORIZATION FROM CW INDUSTRIES INCORPORATED, SOUTHAMPTON, PENNSYLVANIA USA.

AMEYA360
Components Supply Platform

Authorized Distribution Brand :

Website :

Welcome to visit www.ameya360.com

Contact Us :

- ### Address :

  401 Building No.5, JiuGe Business Center, Lane 2301, Yishan Rd
  Minhang District, Shanghai , China

- ### Sales :

  Direct +86 (21) 6401-6692

  Email amall@ameya360.com

  QQ 800077892

  Skype ameyasales1 ameyasales2

- ### Customer Service :

  Email service@ameya360.com

- ### Partnership :

  Tel +86 (21) 64016692-8333

  Email mkt@ameya360.com