TDA7492P

25 W + 25 W dual BTL class-D audio amplifier

Datasheet - production data

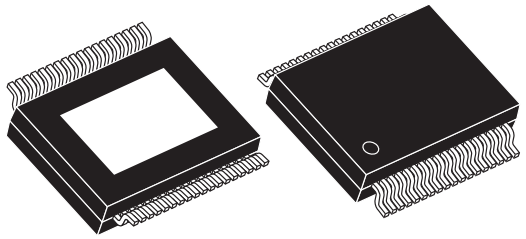

PowerSSO-36
with exposed pad down

Description

The TDA7492P is a dual BTL class-D audio amplifier with single power supply, designed for LCD TVs and monitors.

Thanks to the high efficiency and exposed-pad-down (EPD) package no heatsink is required.

Features

- 25 W + 25 W continuous output power at THD = 10% with V_{CC} = 20 V and R_L = 8 Ω
- Wide-range single-supply operation (8 - 26 V)
- High efficiency (η = 90%)
- Four selectable, fixed gain settings of nominally 21.6 dB, 27.6 dB, 31.1 dB and 33.6 dB
- Differential inputs minimize common-mode noise
- Standby and mute features
- Short-circuit protection
- Thermal overload protection
- Externally synchronizable
- ECOPACK®, environmentally-friendly package

Table 1. Device summary

Order code	Operating temp. range	Package	Packaging
TDA7492P13TR	-40 to 85 °C	PowerSSO-36 EPD	Tape and reel

This is information on a product in full production. www.st.com

Contents

1 Device block diagram 5

2 Pin description 6

2.1 Pinout 6

2.2 Pin list 7

3 Electrical specifications 8

3.1 Absolute maximum ratings 8

3.2 Thermal data 8

3.3 Electrical specifications 8

4 Characterization curves 10

4.1 Characterizations for 6 Ω loads with 18 V 10

4.2 Characterizations for 8 Ω loads with 20 V 13

5 Applications circuit 17

6 Applications information 18

6.1 Mode selection 18

6.2 Gain setting 19

6.3 Input resistance and capacitance 19

6.4 Internal and external clocks 20

6.4.1 Master mode (internal clock) 20

6.4.2 Slave mode (external clock) 20

6.5 Output low-pass filter 21

6.6 Protection functions 22

6.7 Diagnostic output 22

7 Package mechanical data 23

8 Revision history 26

List of tables

Table 1. Device summary . . . 1
Table 2. Pin description list . . . 7
Table 3. Absolute maximum ratings . . . 8
Table 4. Thermal data . . . 8
Table 5. Electrical specifications . . . 8
Table 6. Mode settings . . . 18
Table 7. Gain settings . . . 19
Table 8. How to set up SYNCLK . . . 20
Table 9. PowerSSO-36 EPD dimensions . . . 25
Table 10. Document revision history . . . 26

List of figures

Figure 1. Internal block diagram (showing one channel only) 5
Figure 2. Pin connections (top view, PCB view) 6
Figure 3. Output power vs. supply voltage 10
Figure 4. THD at 1 kHz vs. output power 10
Figure 5. THD at 100 Hz vs. output power 11
Figure 6. THD at 1 W vs. frequency 11
Figure 7. Frequency response 11
Figure 8. Crosstalk vs frequency 12
Figure 9. FFT 0 dB 12
Figure 10. FFT -60 dB 12
Figure 11. Output power vs supply voltage 13
Figure 12. THD at 1 kHz vs output power 13
Figure 13. THD at 100 Hz vs output power 14
Figure 14. THD at 1 W vs frequency 14
Figure 15. Frequency response 14
Figure 16. Crosstalk vs frequency 15
Figure 17. FFT 0 dB 15
Figure 18. FFT -60 dB 15
Figure 19. Test board (SZ-LAB-TDA7492P) layout 16
Figure 20. Applications circuit for class-D amplifier 17
Figure 21. Standby and mute circuits 18
Figure 22. Turn-on/off sequence for minimizing speaker “pop” 18
Figure 23. Device input circuit and frequency response 19
Figure 24. Master and slave connection 20
Figure 25. Typical LC filter for a 8 Ω speaker 21
Figure 26. Typical LC filter for a 4 Ω speaker 21
Figure 27. Behavior of pin DIAG for various protection conditions 22
Figure 28. PowerSSO-36 EPD outline drawing 24

1 Device block diagram

Figure 1 shows the block diagram of one of the two identical channels of the TDA7492P.

Figure 1. Internal block diagram (showing one channel only)

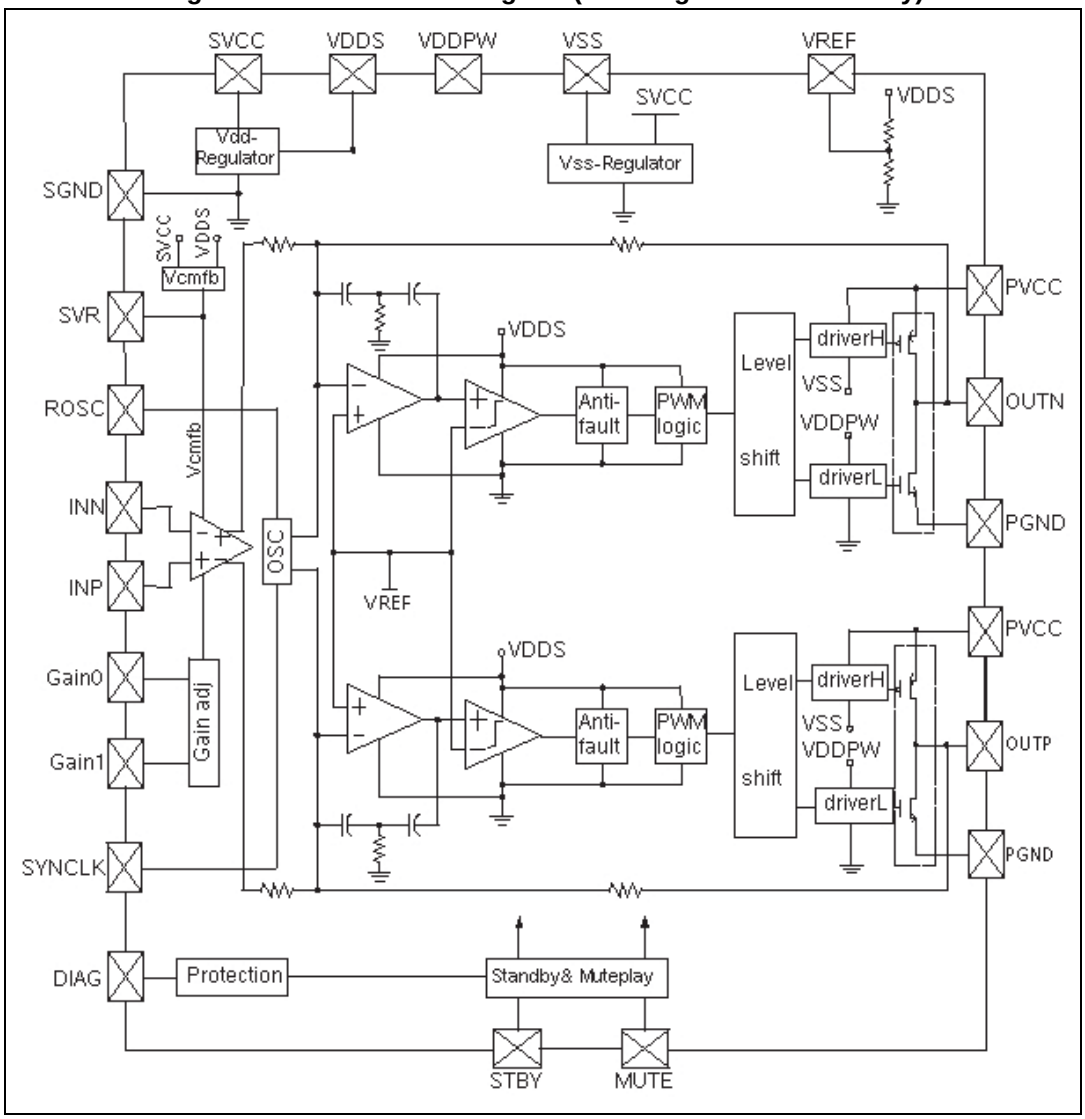

2 Pin description

2.1 Pinout

Figure 2. Pin connections (top view, PCB view)

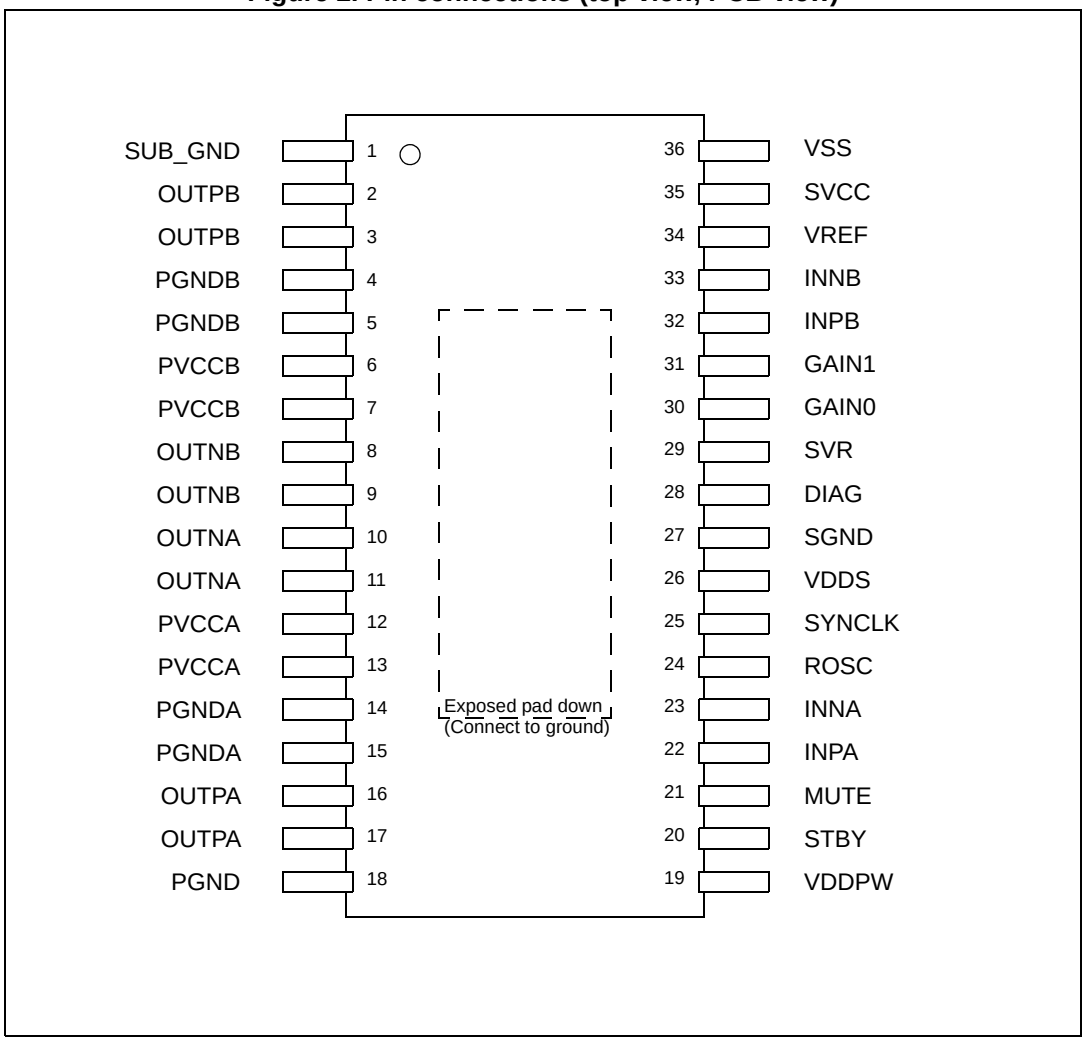

2.2 Pin list

Table 2. Pin description list

Pin n°	Name	Type	Description
1	SUB_GND	PWR	Connect to the frame
2,3	OUTPB	O	Positive PWM for right channel
4,5	PGNDB	PWR	Power stage ground for right channel
6,7	PVCCB	PWR	Power supply for right channel
8,9	OUTNB	O	Negative PWM output for right channel
10,11	OUTNA	O	Negative PWM output for left channel
12,13	PVCCA	PWR	Power supply for left channel
14,15	PGNDA	PWR	Power stage ground for left channel
16,17	OUTPA	O	Positive PWM output for left channel
18	PGND	PWR	Power stage ground
19	VDDPW	O	3.3-V (nominal) regulator output referred to ground for power stage
20	STBY	I	Standby mode control
21	MUTE	I	Mute mode control
22	INPA	I	Positive differential input of left channel
23	INNA	I	Negative differential input of left channel
24	ROSC	O	Master oscillator frequency-setting pin
25	SYNCLK	I/O	Clock in/out for external oscillator
26	VDDS	O	3.3-V (nominal) regulator output referred to ground for signal blocks
27	SGND	PWR	Signal ground
28	DIAG	O	Open-drain diagnostic output
29	SVR	O	Supply voltage rejection
30	GAIN0	I	Gain setting input 1
31	GAIN1	I	Gain setting input 2
32	INPB	I	Positive differential input of right channel
33	INNB	I	Negative differential input of right channel
34	VREF	O	Half VDDS (nominal) referred to ground
35	SVCC	PWR	Signal power supply
36	VSS	O	3.3-V (nominal) regulator output referred to power supply
-	EP	PWR	Exposed pad for connection to ground plane as heatsink

3 Electrical specifications

3.1 Absolute maximum ratings

Table 3. Absolute maximum ratings

Symbol	Parameter	Value	Unit
V_{CCMAX}	DC supply voltage for pins PVCCA, PVCCB, SVCC	30	V
VI	Voltage limits for input pins STANDBY, MUTE, INNA, INPA, INNB, INPB, GAIN0, GAIN1	-0.3 to 3.6	V
T_{op}	Operating temperature	-40 to 85	°C
T_j	Junction temperature	-40 to 150	°C
T_{stg}	Storage temperature	-40 to 150	°C

3.2 Thermal data

Table 4. Thermal data

Symbol	Parameter	Min	Typ	Max	Unit
$R_{th\ j\text{-}case}$	Thermal resistance, junction to case	-	2	3	°C/W
$R_{th\ j\text{-}amb}$	Thermal resistance, junction to ambient	-	24 (1)	-	°C/W

1. FR4 with vias to copper area of 9 cm^2

3.3 Electrical specifications

Unless otherwise stated, the results in *Table 5* below are given for the conditions: V_{CC} = 20 V, R_L (load) = 8 Ω, R_{OSC} = R3 = 39 kΩ, C8 = 100 nF, f = 1 kHz, G_V = 21.6 dB, and T_{amb} = 25 °C.

Table 5. Electrical specifications

Symbol	Parameter	Condition	Min	Typ	Max	Unit
V_{CC}	Supply voltage for pins PVCCA, PVCCB, SVCC	-	8	-	26	V
I_q	Total quiescent	-	-	26	35	mA
I_{qSTBY}	Quiescent current in standby	-	-	2.5	5.0	µA
V_{OS}	Output offset voltage	Play mode	-	-	±100	mV
		Mute mode	-	-	±60	mV
I_{OCP}	Overcurrent protection threshold	R_L = 0 Ω	3.8	4.2	-	A
T_{jSD}	Junction temperature at thermal shutdown	-	-	150	-	°C
R_i	Input resistance	Differential input	48	60	-	kΩ

Table 5. Electrical specifications (continued)

Symbol	Parameter	Condition	Min	Typ	Max	Unit
V_{OVP}	Overvoltage protection threshold	-	28	29	-	V
V_{UVP}	Undervoltage protection threshold	-	-	-	7	V
R_{dsON}	Power transistor on resistance	High side	-	0.2	-	Ω
		Low side	-	0.2	-	
P_o	Output power	THD = 10%	-	25	-	W
		THD = 1%	-	20	-	
P_o	Output power	V_{CC} = 12 V, THD = 10%	-	9.5	-	W
		V_{CC} = 12 V, THD = 1%	-	7.2	-	
P_D	Power dissipated by device	P_o = 25 W + 25 W, THD = 10%	-	5.0	-	W
η	Efficiency	P_o = 10 W + 10 W	80	90	-	%
THD	Total harmonic distortion	P_o = 1 W	-	0.1	0.4	%
G_V	Closed-loop gain	GAIN0 = L, GAIN1 = L	20.6	21.6	22.6	dB
		GAIN0 = L, GAIN1 = H	26.6	27.6	28.6	
		GAIN0 = H, GAIN1 = L	30.1	31.1	32.1	
		GAIN0 = H, GAIN1 = H	32.6	33.6	34.6	
ΔG_V	Gain matching	-	-	-	±1	dB
CT	Cross talk	f = 1 kHz	-	50	-	dB
eN	Total input noise	A Curve, G_V = 20 dB	-	20	-	µV
		f = 22 Hz to 22 kHz	-	25	35	
SVRR	Supply voltage rejection ratio	fr = 100 Hz, Vr = 0.5 V, C_{SVR} = 10 µF	40	50	-	dB
T_r, T_f	Rise and fall times	-	-	50	-	ns
f_{SW}	Switching frequency	Internal oscillator	290	310	330	kHz
f_{SWR}	Output switching frequency range	With internal oscillator (1)	250	-	400	kHz
		With external oscillator (2)	250	-	400	
V_{inH}	Digital input high (H)	-	2.3	-	-	V
V_{inL}	Digital input low (L)		-	-	0.8	
A_{MUTE}	Mute attenuation	V_{MUTE} = 1 V	60	80	-	dB

1. $f_{SW} = 10^6 / ((16 * R_{OSC} + 182) * 4)$ kHz, $f_{SYNCLK} = 2 * f_{SW}$ with R3 = 39 kΩ, see *Figure 20.*
2. $f_{SW} = f_{SYNCLK} / 2$ with the frequency of the external oscillator.

4 Characterization curves

The following characterizations were made using the SZ-LAB-TDA7492P demo board. The layout is shown in *Figure 19 on page 16*. The LC filter for the 6 Ω load used 22 µH and 220 nF components, whilst that for the 8 Ω load used 33 µH and 220 nF.

4.1 Characterizations for 6 Ω loads with 18 V

Figure 3. Output power vs. supply voltage

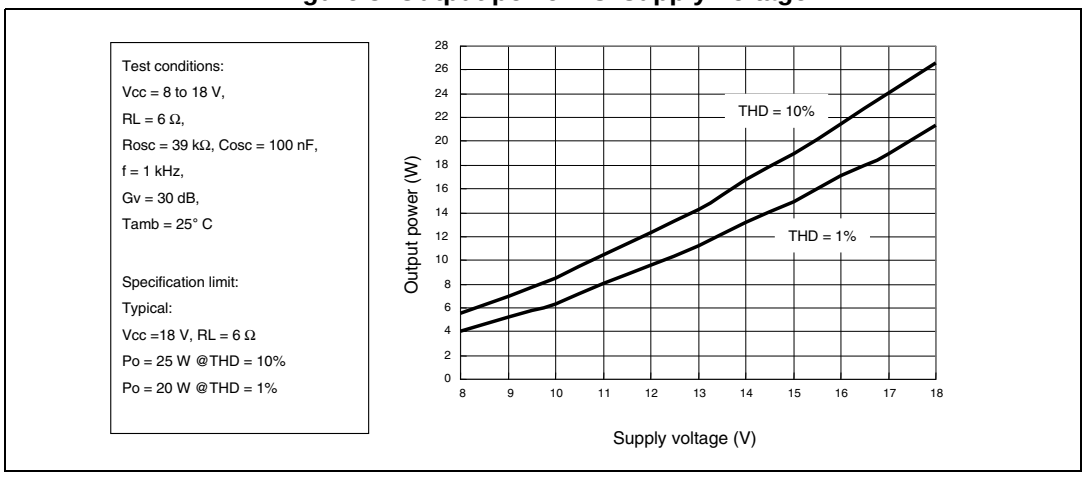

Figure 4. THD at 1 kHz vs. output power

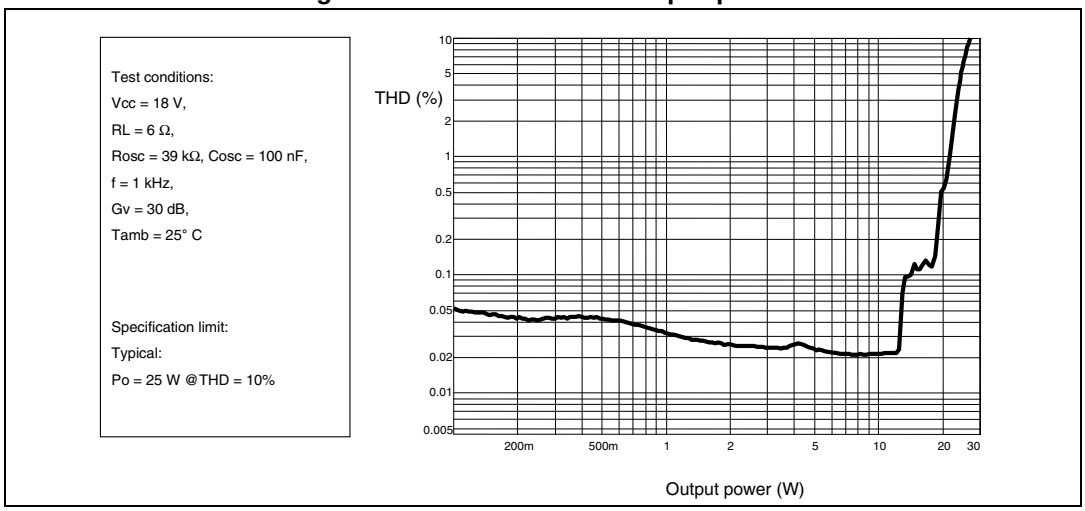

Figure 5. THD at 100 Hz vs. output power

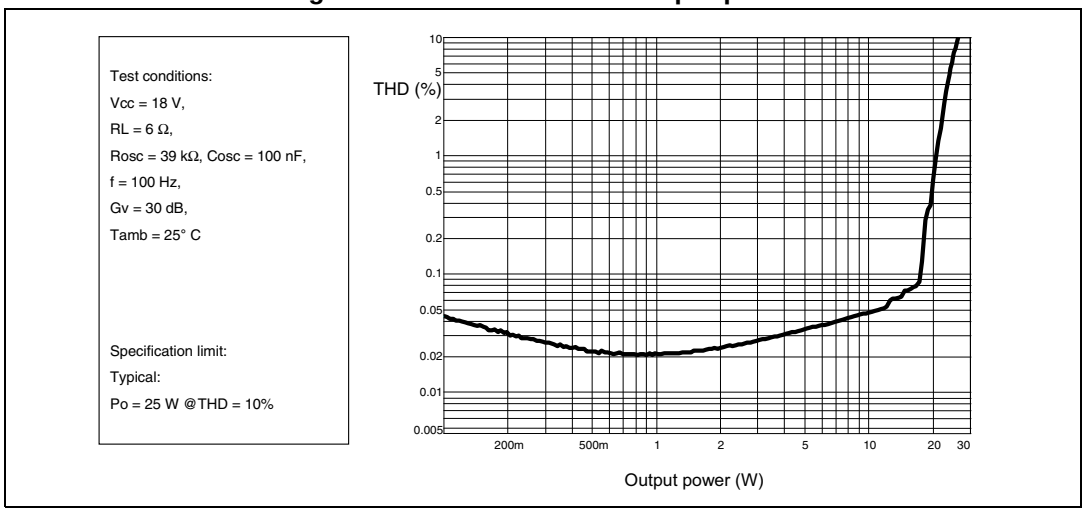

Figure 6. THD at 1 W vs. frequency

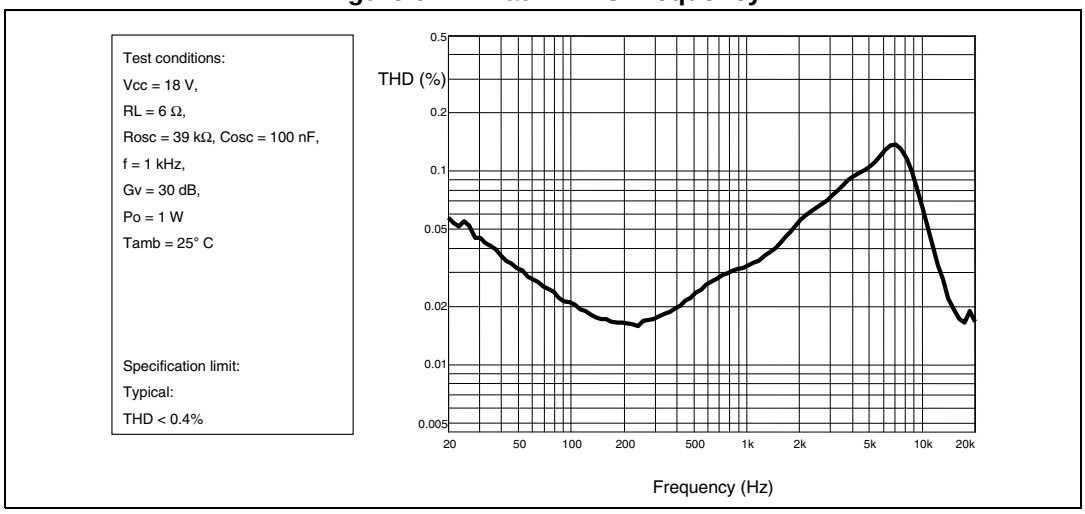

Figure 7. Frequency response

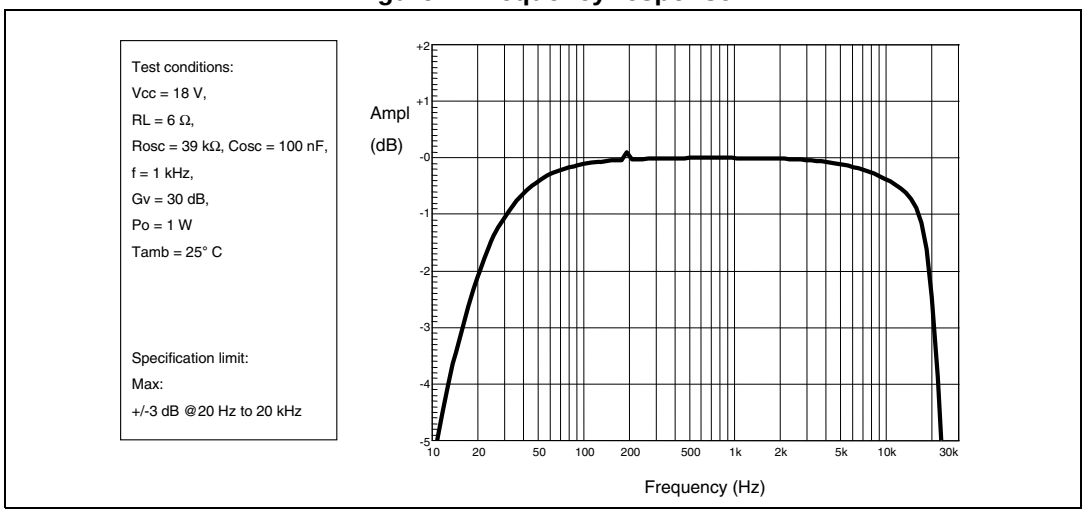

Figure 8. Crosstalk vs frequency

Test conditions:
Vcc = 18 V,
RL = 6 Ω,
Rosc = 39 kΩ, Cosc = 100 nF,
f = 1 kHz,
Gv = 30 dB,
Po = 1 W
Tamb = 25° C

Specification limit:
Typical:
> 50 dB @f = 1 kHz

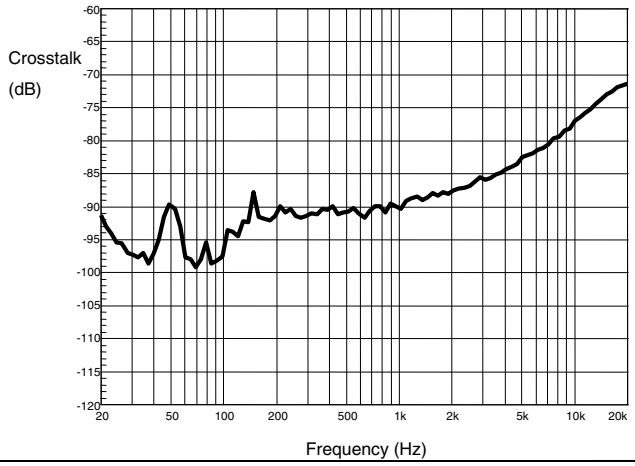

Figure 9. FFT 0 dB

Test conditions:
Vcc = 18 V,
RL = 6 Ω,
Rosc = 39 kΩ, Cosc = 100 nF,
f = 1 kHz,
Gv = 30 dB,
Po = 1 W
Tamb = 25° C

Specification limit:
Typical:
> 60 dB for the harmonic frequency

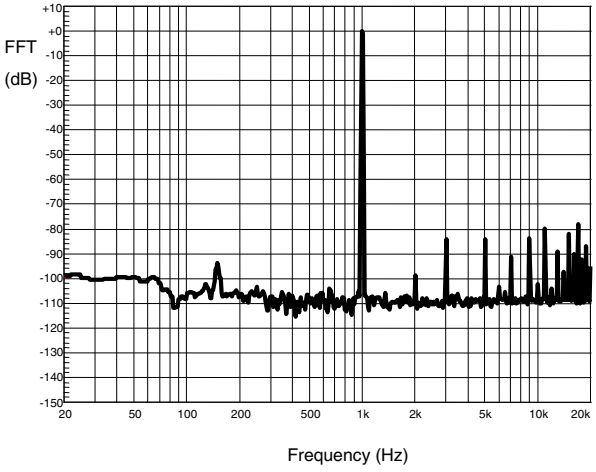

Figure 10. FFT -60 dB

Test conditions:
Vcc = 18 V,
RL = 6 Ω,
Rosc = 39 kΩ, Cosc = 100 nF,
f = 1 kHz,
Gv = 30 dB,
Po = -60 dB @1 W = 0 dB
Tamb = 25° C

Specification limit:
Typical:
> 90dB for the harmonic frequency

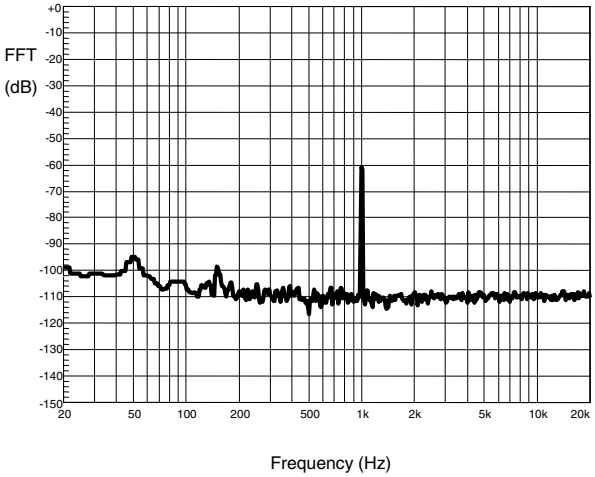

4.2 Characterizations for 8 Ω loads with 20 V

Figure 11. Output power vs supply voltage

Test conditions:
Vcc = 8 to 20 V,
RL = 8 Ω,
Rosc = 39 kΩ, Cosc = 100 nF,
f = 1 kHz,
Gv = 30 dB,
Tamb = 25° C

Specification limit:
Typical:
Vs = 20 V, RL = 8 Ω
Po = 25 W @THD = 10%
Po = 20 W @THD = 1%

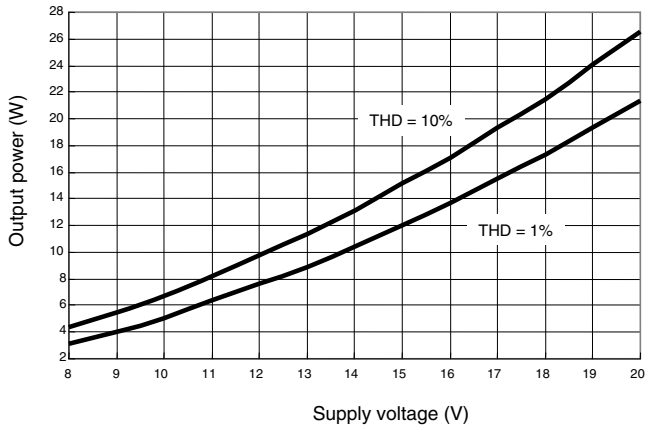

Figure 12. THD at 1 kHz vs output power

Test conditions:
Vcc = 20 V,
RL = 8 Ω,
Rosc = 39 kΩ, Cosc = 100 nF,
f = 1 kHz,
Gv = 30 dB,
Tamb = 25° C

Specification limit:
Typical:
Po = 25 W @THD = 10%

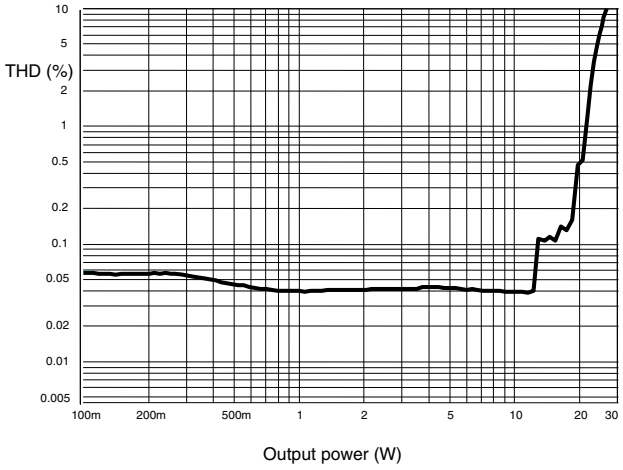

Figure 13. THD at 100 Hz vs output power

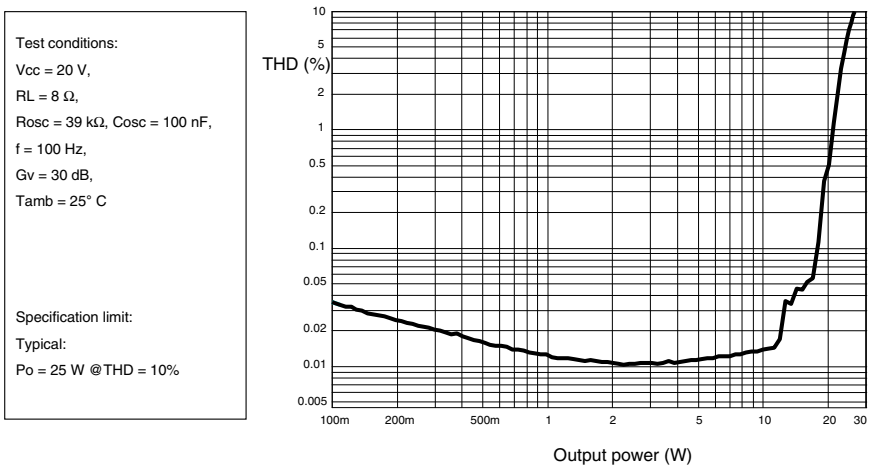

Figure 14. THD at 1 W vs frequency

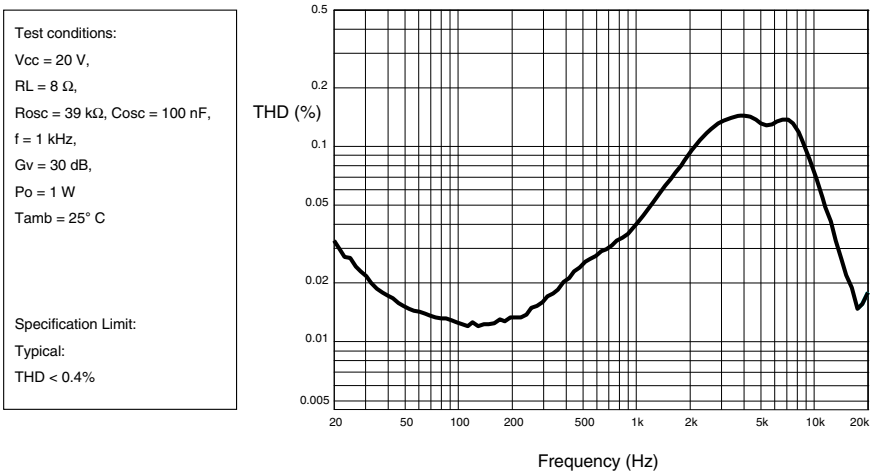

Figure 15. Frequency response

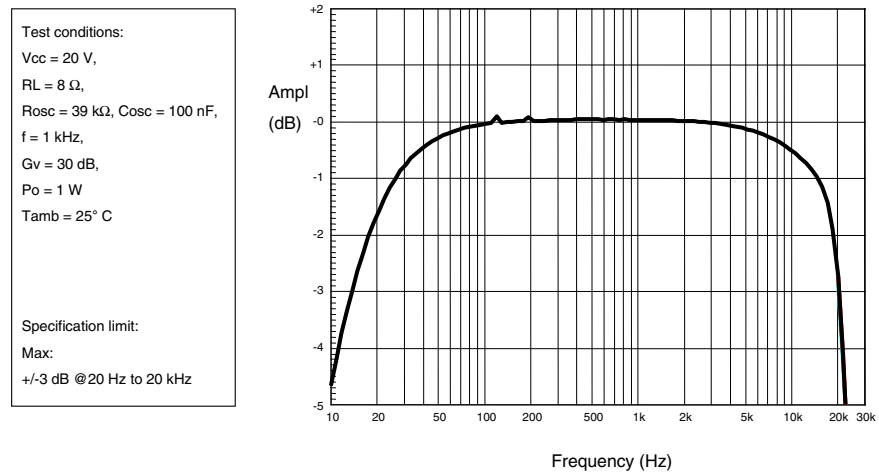

Figure 16. Crosstalk vs frequency

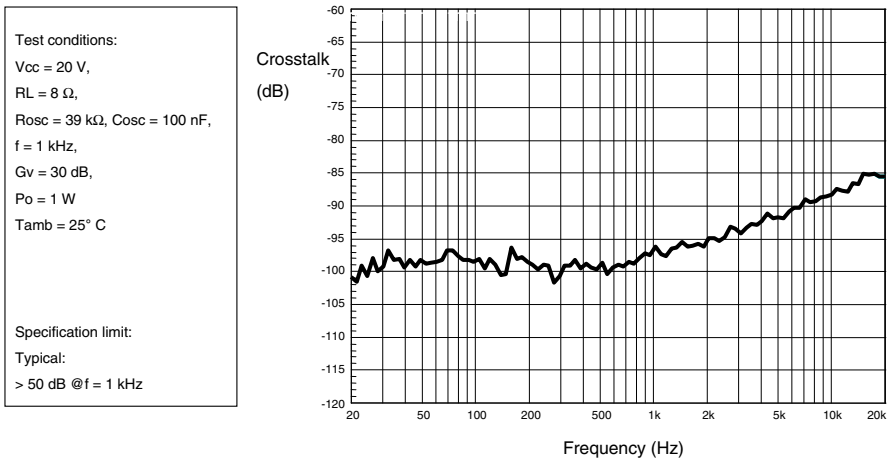

Figure 17. FFT 0 dB

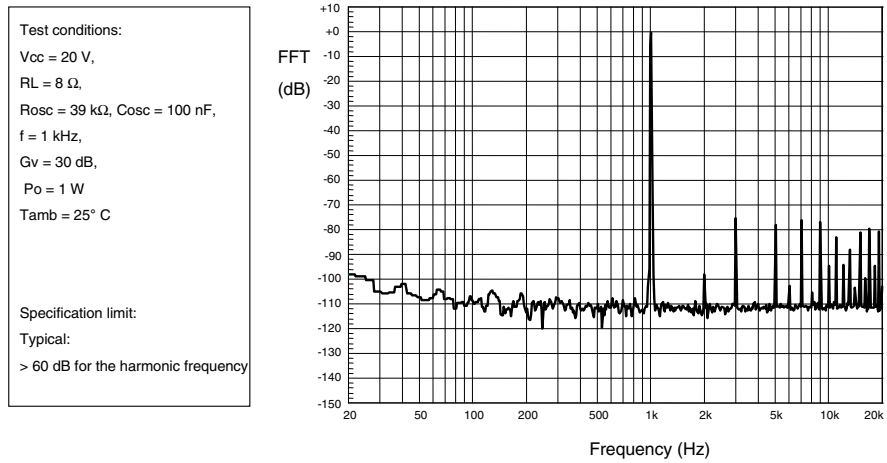

Figure 18. FFT -60 dB

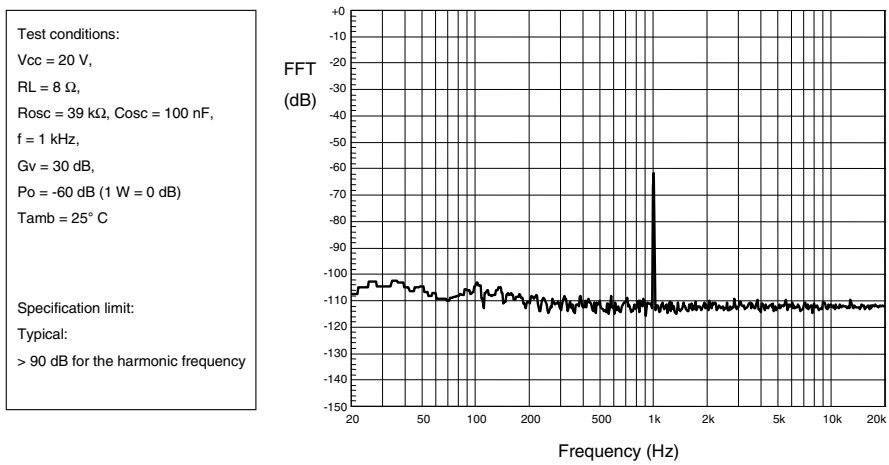

Figure 19. Test board (SZ-LAB-TDA7492P) layout

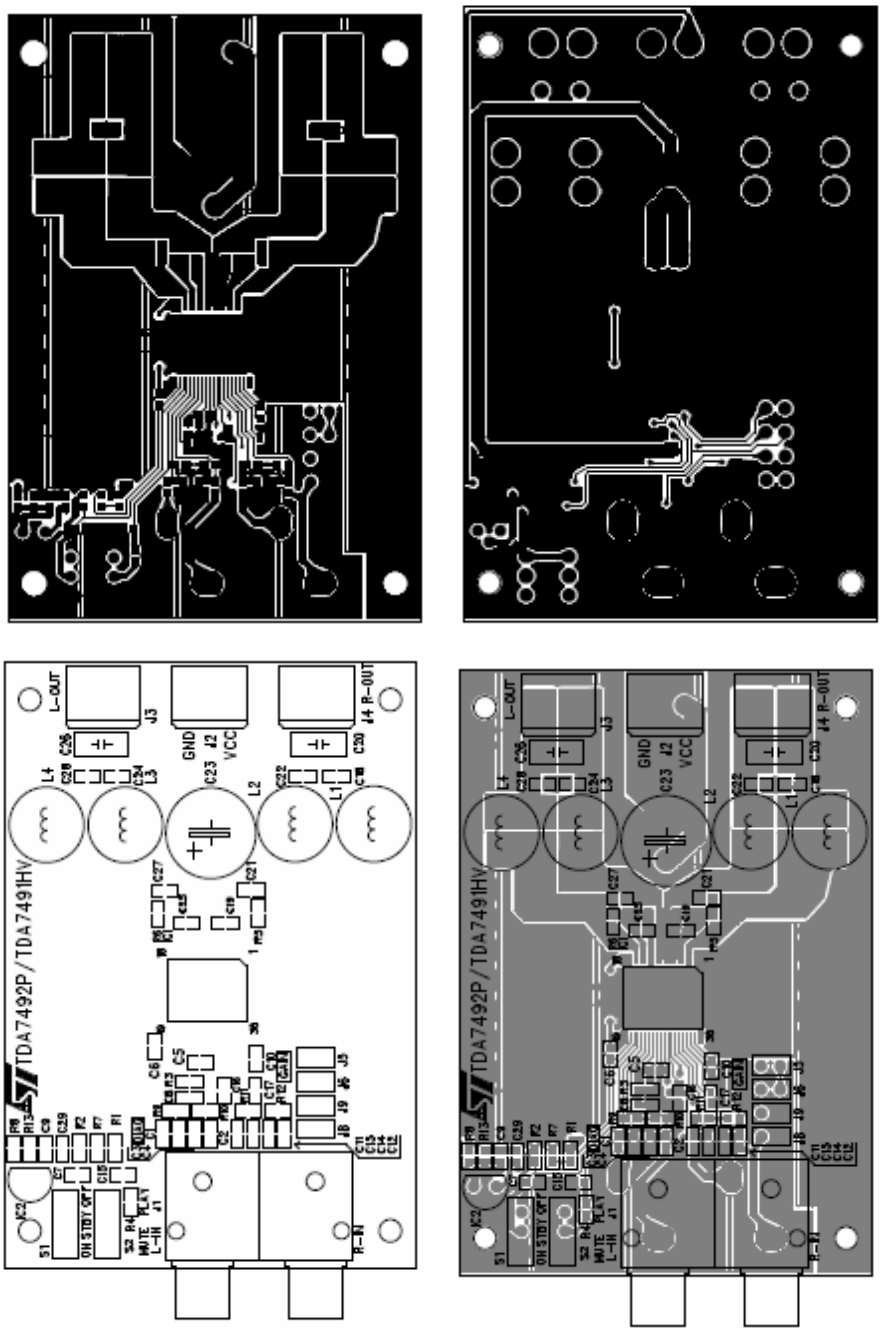

5 Applications circuit

Figure 20. Applications circuit for class-D amplifier

Jumper settings for gain:

GAIN0 : GAIN1	Nominal gain
0 V : 0 V	21.6 dB
0 V : 3.3 V	27.6 dB
3.3 V : 0 V	31.1 dB
3.3 V : 3.3 V	33.6 dB

Switch settings for standby, mute and play:

STBY : MUTE	Mode
0 V : 0 V	Standby
0 V : 3.3 V	Standby
3.3 V : 0 V	Mute
3.3 V : 3.3 V	Play

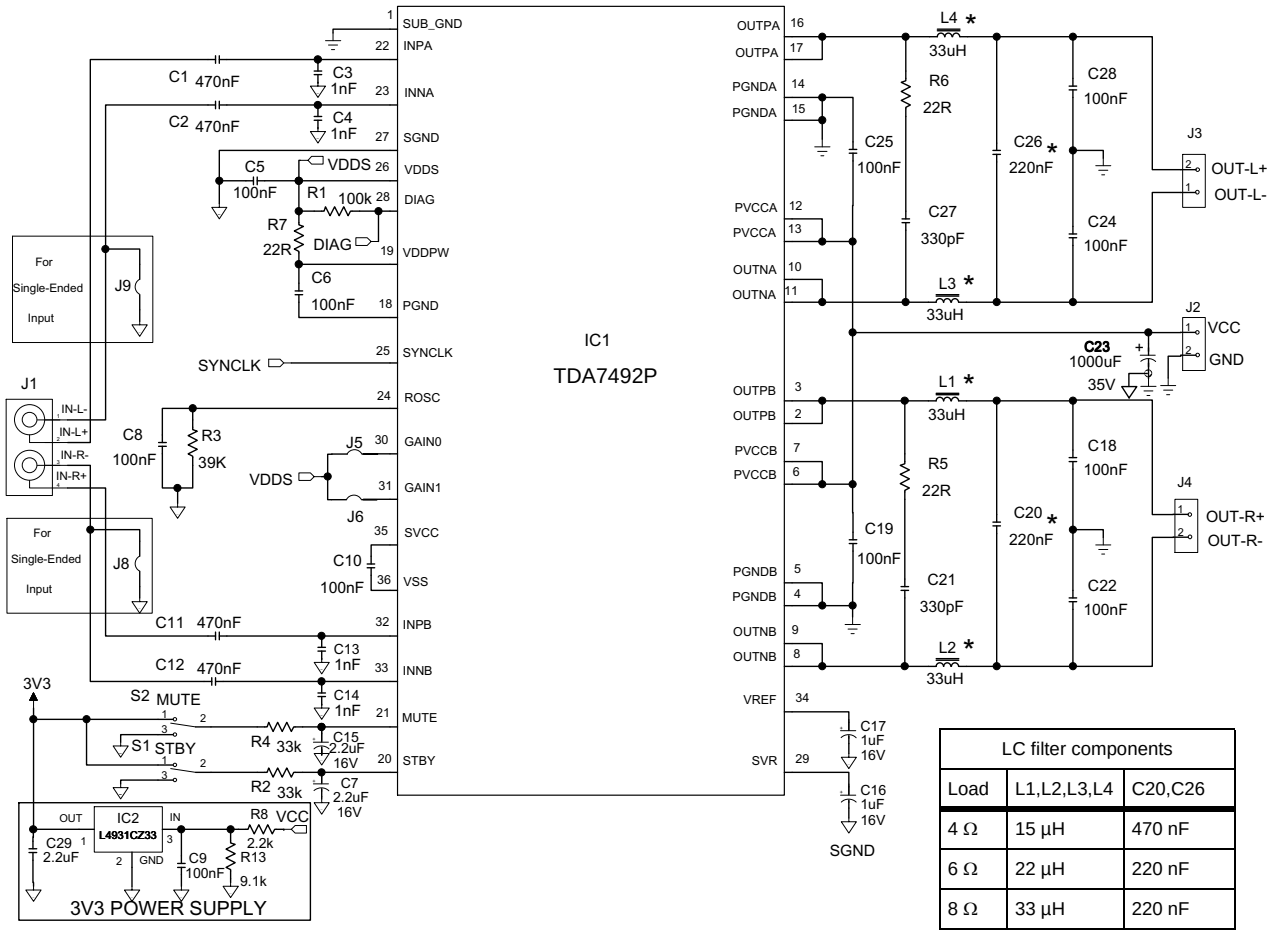

LC filter components		
Load	L1,L2,L3,L4	C20,C26
4 Ω	15 µH	470 nF
6 Ω	22 µH	220 nF
8 Ω	33 µH	220 nF
16 Ω	68 µH	220 nF

6 Applications information

6.1 Mode selection

The three operating modes of the TDA7492P are set by the two inputs STBY (pin 20) and MUTE (pin 21).

- Standby mode: all circuits are turned off, very low current consumption.
- Mute mode: inputs are connected to ground and the positive and negative PWM outputs are at 50% duty cycle.
- Play mode: the amplifiers are active.

The protection functions of the TDA7492P are enabled by pulling down the voltages of the STBY and MUTE inputs shown in *Figure 21*. The input current of the corresponding pins must be limited to 200 µA.

Table 6. Mode settings

Mode selection	STBY	MUTE
Standby	L (1)	X (don't care)
Mute	H (1)	L
Play	H	H

1. Drive levels defined in *Table 5: Electrical specifications on page 8*

Figure 21. Standby and mute circuits

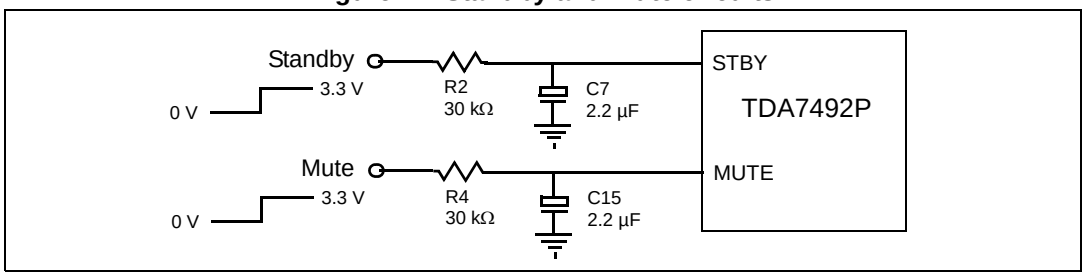

Figure 22. Turn-on/off sequence for minimizing speaker "pop"

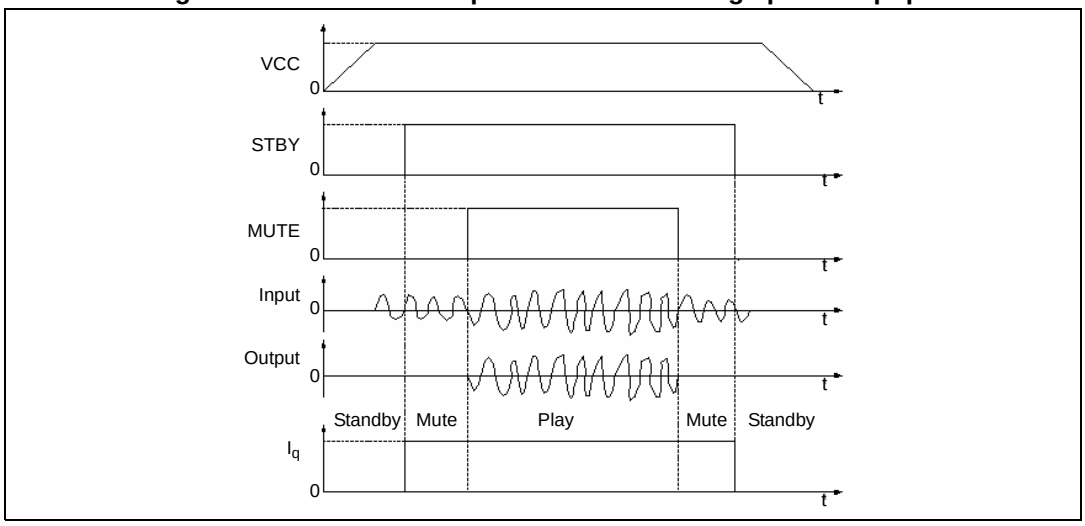

6.2 Gain setting

The gain of the TDA7492P is set by the two inputs, GAIN0 (pin 30) and GAIN1 (pin31). Internally, the gain is set by changing the feedback resistors of the amplifier.

Table 7. Gain settings

GAIN0	GAIN1	Nominal gain, G_V (dB)
0	0	21.6
0	1	27.6
1	0	31.1
1	1	33.6

6.3 Input resistance and capacitance

The input impedance is set by an internal resistor Ri = 60 kΩ (typical). An input capacitor (Ci) is required to couple the AC input signal.

The equivalent circuit and frequency response of the input components are shown in *Figure 23*. For Ci = 470 nF the high-pass filter cutoff frequency is below 20 Hz:

$$fc = 1 / (2 * \pi * Ri * Ci)$$

Figure 23. Device input circuit and frequency response

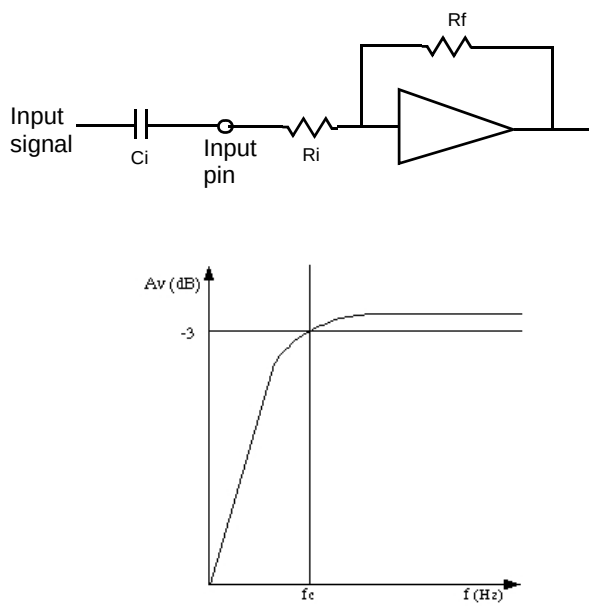

6.4 Internal and external clocks

The clock of the class-D amplifier can be generated internally or can be driven by an external source.

If two or more class-D amplifiers are used in the same system, it is recommended that all devices operate at the same clock frequency. This can be implemented by using one TDA7492P as master clock, while the other devices are in slave mode (that is, externally clocked. The clock interconnect is via pin SYNCLK of each device. As explained below, SYNCLK is an output in master mode and an input in slave mode.

6.4.1 Master mode (internal clock)

Using the internal oscillator, the output switching frequency, f_{SW}, is controlled by the resistor, R_{OSC}, connected to pin ROSC:

$$f_{SW} = 10^6 / ((16 * R_{OSC} + 182) * 4) \text{ kHz}$$

where R_{OSC} is in kΩ.

In master mode, pin SYNCLK is used as a clock output pin, whose frequency is:

$$f_{SYNCLK} = 2 * f_{SW}$$

For master mode to operate correctly then resistor R_{OSC} must be less than 60 kΩ as given below in *Table 8*.

6.4.2 Slave mode (external clock)

In order to accept an external clock input the pin ROSC must be left open, that is, floating. This forces pin SYNCLK to be internally configured as an input as given in *Table 8*.

The output switching frequency of the slave devices is:

$$f_{SW} = f_{SYNCLK} / 2$$

Table 8. How to set up SYNCLK

Mode	ROSC	SYNCLK
Master	R_{OSC} < 60 kΩ	Output
Slave	Floating (not connected)	Input

Figure 24. Master and slave connection

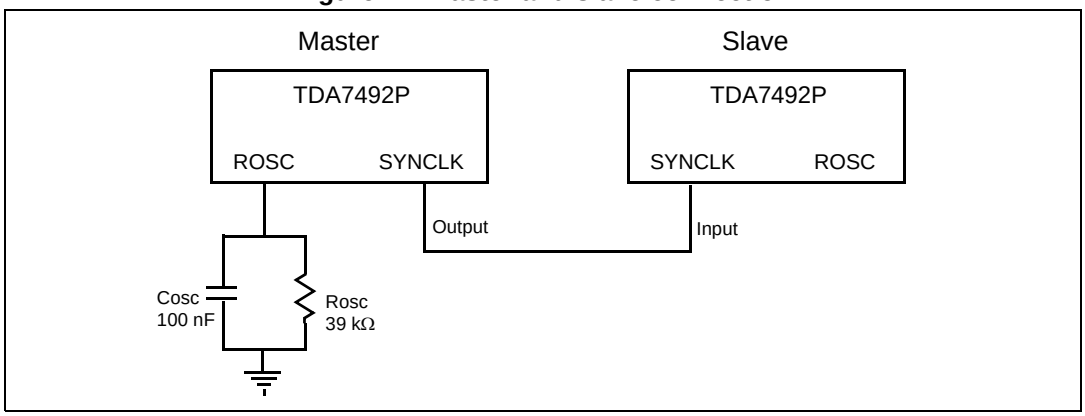

6.5 Output low-pass filter

To avoid EMI problems, it may be necessary to use a low-pass filter before the speaker. The cutoff frequency should be larger than 22 kHz and much lower than the output switching frequency. It is necessary to choose the L-C component values depending on the loud speaker impedance. Some typical values, which give a cutoff frequency of 27 kHz, are shown in *Figure 25* and *Figure 26* below.

Figure 25. Typical LC filter for a 8 Ω speaker

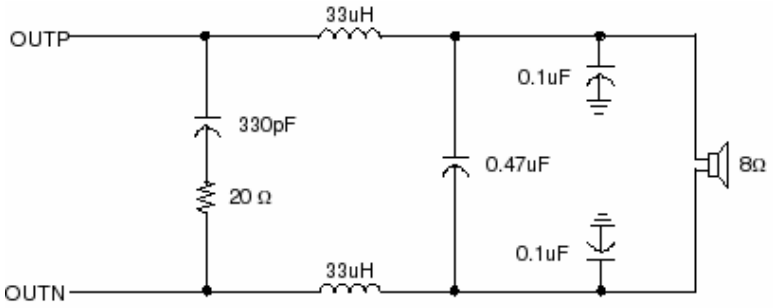

Figure 26. Typical LC filter for a 4 Ω speaker

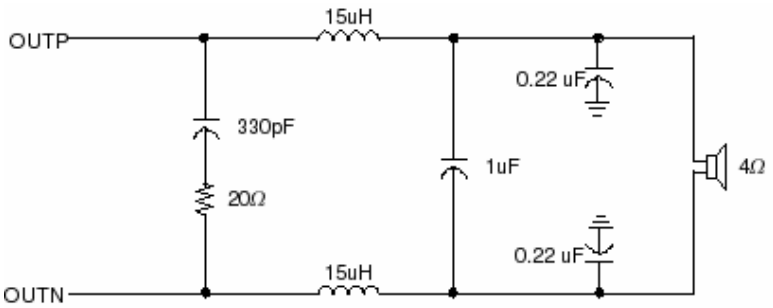

6.6 Protection functions

The TDA7492P is fully protected against overvoltage, undervoltage, overcurrent and thermal overloads as explained here.

Overvoltage protection (OVP)

If the supply voltage exceeds the value for V_{OVP} given in *Table 5: Electrical specifications on page 8* the overvoltage protection is activated which forces the outputs to the high-impedance state. When the supply voltage drops to below the threshold value the device restarts.

Undervoltage protection (UVP)

If the supply voltage drops below the value for V_{UVP} given in *Table 5: Electrical specifications on page 8* the undervoltage protection is activated which forces the outputs to the high-impedance state. When the supply voltage recovers the device restarts.

Overcurrent protection (OCP)

If the output current exceeds the value for I_{OCP} given in *Table 5: Electrical specifications on page 8* the overcurrent protection is activated which forces the outputs to the high-impedance state. Periodically, the device attempts to restart. If the overcurrent condition is still present then the OCP remains active. The restart time, T_{OC}, is determined by the R-C components connected to pin STBY.

Thermal protection (OTP)

If the junction temperature, T_j, reaches 145 °C (nominally), the device goes to mute mode and the positive and negative PWM outputs are forced to 50% duty cycle. If the junction temperature reaches the value for T_j given in *Table 5: Electrical specifications on page 8* the device shuts down and the output is forced to the high-impedance state. When the device cools sufficiently the device restarts.

6.7 Diagnostic output

The output pin DIAG is an open-drain transistor. When the protection is activated it is in the high-impedance state. The pin can be connected to a power supply (<26 V) by a pull-up resistor whose value is limited by the maximum sinking current (200 µA) of the pin.

Figure 27. Behavior of pin DIAG for various protection conditions

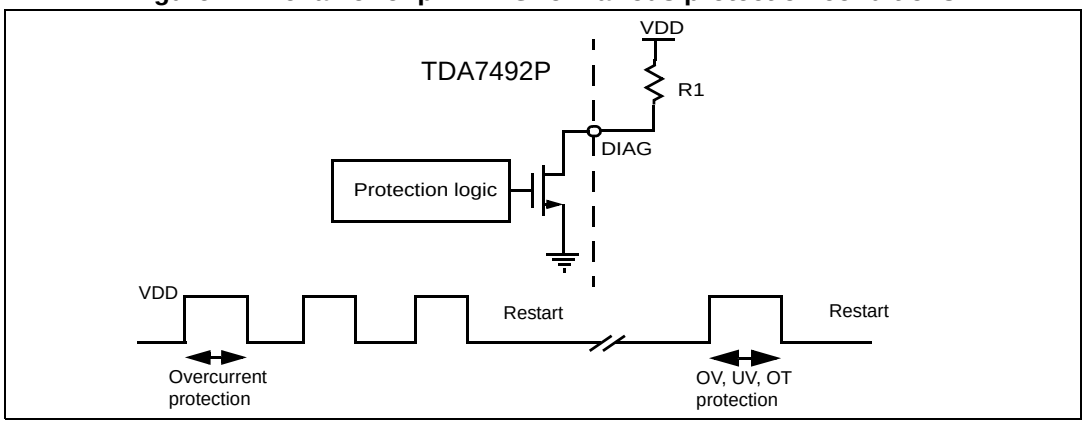

7 Package mechanical data

In order to meet environmental requirements, ST offers these devices in different grades of ECOPACK® packages, depending on their level of environmental compliance. ECOPACK® specifications, grade definitions and product status are available at: *www.st.com*. ECOPACK® is an ST trademark.

The TDA7492P comes in a 36-pin PowerSSO package with exposed pad down.

Figure 28 below shows the package outline and *Table 9* gives the dimensions.

Figure 28. PowerSSO-36 EPD outline drawing

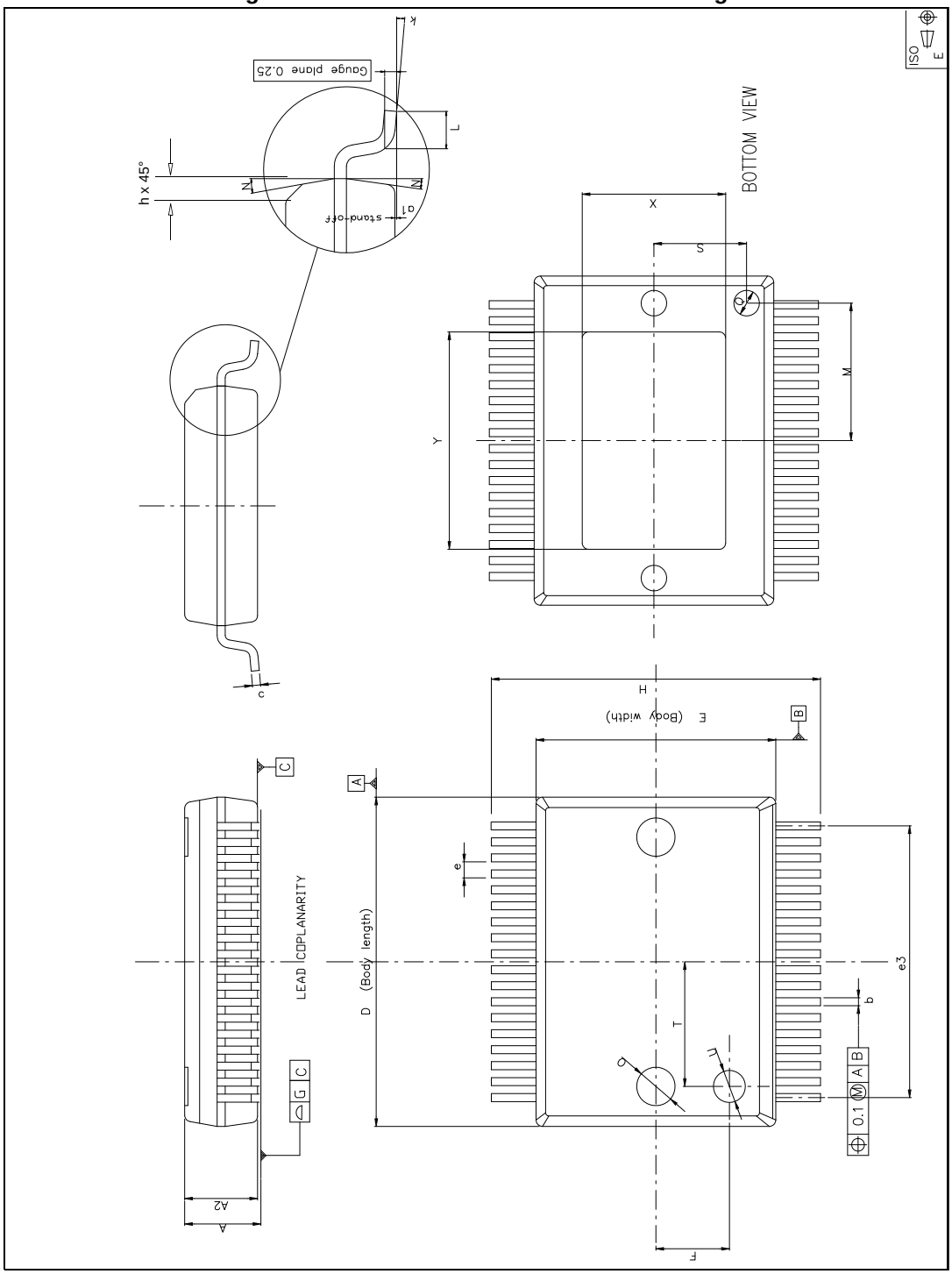

Table 9. PowerSSO-36 EPD dimensions

Symbol	Dimensions in mm			Dimensions in inches		
	Min	Typ	Max	Min	Typ	Max
A	2.15	-	2.45	0.085	-	0.096
A2	2.15	-	2.35	0.085	-	0.093
a1	0	-	0.10	0	-	0.004
b	0.18	-	0.36	0.007	-	0.014
c	0.23	-	0.32	0.009	-	0.013
D	10.10	-	10.50	0.398	-	0.413
E	7.40	-	7.60	0.291	-	0.299
e	-	0.5	-	-	0.020	-
e3	-	8.5	-	-	0.335	-
F	-	2.3	-	-	0.091	-
G	-	-	0.10	-	-	0.004
H	10.10	-	10.50	0.398	-	0.413
h	-	-	0.40	-	-	0.016
k	0	-	8 degrees	0	-	8 degrees
L	0.60	-	1.00	0.024	-	0.039
M	-	4.30	-	-	0.169	-
N	-	-	10 degrees	-	-	10 degrees
O	-	1.20	-	-	0.047	-
Q	-	0.80	-	-	0.031	-
S	-	2.90	-	-	0.114	-
T	-	3.65	-	-	0.144	-
U	-	1.00	-	-	0.039	-
X	4.10	-	4.70	0.161	-	0.185
Y	4.90	-	7.10	0.193	-	0.280

8 Revision history

Table 10. Document revision history

Date	Revision	Changes
30-Sep-2008	1	Initial release.
11-May-2009	2	Updated supply operating range to 8 V - 26 V *on page 1* Changed C1 to C8 at beginning of *Section 3.3 on page 8* Updated *Table 5: Electrical specifications on page 8* for V_{CC} min, V_{OS} min/max and added new parameter V_{UV} Updated *Figure 20: Applications circuit for class-D amplifier on page 17* Inserted brackets in equation in *Table 5* footnote and in *Section 6.4.1 on page 20* Updated values in UVP and OCP in *Section 6.6 on page 22* Updated voltage to “<26 V” in *Section 6.7 on page 22* Updated max dimensions for A and A2 in *Table 9: PowerSSO-36 EPD dimensions on page 25*.
02-Sep-2009	3	Updated value for G_V at head of *Section 3.3 on page 8* Updated package Y (Min) dimension in *Table 9 on page 25*.
19-Jan-2011	4	Updated operating temperature range Updated datasheet presentation.
12-Sep-2011	5	Updated OUTNA in *Table 2: Pin description list*
20-Feb-2014	6	Updated order code *Table 1 on page 1*

Please Read Carefully:

Information in this document is provided solely in connection with ST products. STMicroelectronics NV and its subsidiaries (“ST”) reserve the right to make changes, corrections, modifications or improvements, to this document, and the products and services described herein at any time, without notice.

All ST products are sold pursuant to ST’s terms and conditions of sale.

Purchasers are solely responsible for the choice, selection and use of the ST products and services described herein, and ST assumes no liability whatsoever relating to the choice, selection or use of the ST products and services described herein.

No license, express or implied, by estoppel or otherwise, to any intellectual property rights is granted under this document. If any part of this document refers to any third party products or services it shall not be deemed a license grant by ST for the use of such third party products or services, or any intellectual property contained therein or considered as a warranty covering the use in any manner whatsoever of such third party products or services or any intellectual property contained therein.

UNLESS OTHERWISE SET FORTH IN ST’S TERMS AND CONDITIONS OF SALE ST DISCLAIMS ANY EXPRESS OR IMPLIED WARRANTY WITH RESPECT TO THE USE AND/OR SALE OF ST PRODUCTS INCLUDING WITHOUT LIMITATION IMPLIED WARRANTIES OF MERCHANTABILITY, FITNESS FOR A PARTICULAR PURPOSE (AND THEIR EQUIVALENTS UNDER THE LAWS OF ANY JURISDICTION), OR INFRINGEMENT OF ANY PATENT, COPYRIGHT OR OTHER INTELLECTUAL PROPERTY RIGHT.

ST PRODUCTS ARE NOT DESIGNED OR AUTHORIZED FOR USE IN: (A) SAFETY CRITICAL APPLICATIONS SUCH AS LIFE SUPPORTING, ACTIVE IMPLANTED DEVICES OR SYSTEMS WITH PRODUCT FUNCTIONAL SAFETY REQUIREMENTS; (B) AERONAUTIC APPLICATIONS; (C) AUTOMOTIVE APPLICATIONS OR ENVIRONMENTS, AND/OR (D) AEROSPACE APPLICATIONS OR ENVIRONMENTS. WHERE ST PRODUCTS ARE NOT DESIGNED FOR SUCH USE, THE PURCHASER SHALL USE PRODUCTS AT PURCHASER’S SOLE RISK, EVEN IF ST HAS BEEN INFORMED IN WRITING OF SUCH USAGE, UNLESS A PRODUCT IS EXPRESSLY DESIGNATED BY ST AS BEING INTENDED FOR “AUTOMOTIVE, AUTOMOTIVE SAFETY OR MEDICAL” INDUSTRY DOMAINS ACCORDING TO ST PRODUCT DESIGN SPECIFICATIONS. PRODUCTS FORMALLY ESCC, QML OR JAN QUALIFIED ARE DEEMED SUITABLE FOR USE IN AEROSPACE BY THE CORRESPONDING GOVERNMENTAL AGENCY.

Resale of ST products with provisions different from the statements and/or technical features set forth in this document shall immediately void any warranty granted by ST for the ST product or service described herein and shall not create or extend in any manner whatsoever, any liability of ST.

ST and the ST logo are trademarks or registered trademarks of ST in various countries.
Information in this document supersedes and replaces all information previously supplied.
The ST logo is a registered trademark of STMicroelectronics. All other names are the property of their respective owners.

© 2014 STMicroelectronics - All rights reserved

STMicroelectronics group of companies

Australia - Belgium - Brazil - Canada - China - Czech Republic - Finland - France - Germany - Hong Kong - India - Israel - Italy - Japan - Malaysia - Malta - Morocco - Philippines - Singapore - Spain - Sweden - Switzerland - United Kingdom - United States of America

www.st.com

AMEYA360
Components Supply Platform

Authorized Distribution Brand :

Website :

Welcome to visit www.ameya360.com

Contact Us :

- ### Address :

  401 Building No.5, JiuGe Business Center, Lane 2301, Yishan Rd
  Minhang District, Shanghai , China

- ### Sales :

  Direct +86 (21) 6401-6692

  Email amall@ameya360.com

  QQ 800077892

  Skype ameyasales1 ameyasales2

- ### Customer Service :

  Email service@ameya360.com

- ### Partnership :

  Tel +86 (21) 64016692-8333

  Email mkt@ameya360.com