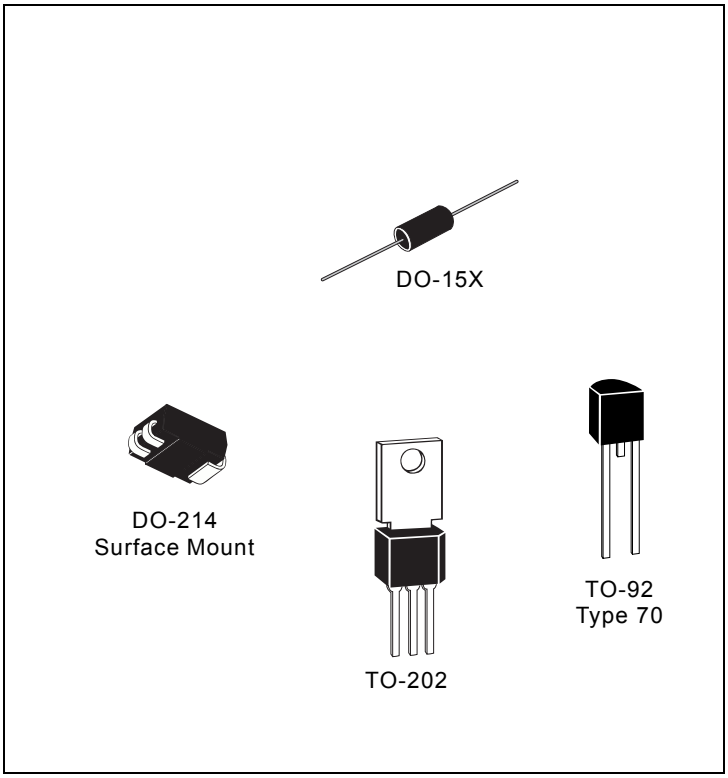

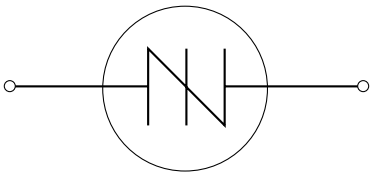

Sidac

(79 V to 330 V) RoHS

General Description

The sidac is a silicon bilateral voltage triggered switch with greater power-handling capabilities than standard diacs. Upon application of a voltage exceeding the sidac breakover voltage point, the sidac switches on through a negative resistance region to a low on-state voltage. Conduction continues until the current is interrupted or drops below the minimum holding current of the device.

Teccor's sidacs feature glass-passivated junctions to ensure a rugged and dependable device capable of withstanding harsh environments.

Variations of devices covered in this data sheet are available for custom design applications. Consult the factory for more information.

Applications

- **High-voltage lamp ignitors**
- **Natural gas ignitors**
- **Gas oil ignitors**
- **High-voltage power supplies**
- **Xenon ignitors**
- **Overvoltage protector**
- **Pulse generators**
- **Fluorescent lighting ignitors**
- **HID lighting ignitors**

Features

- **RoHS Compliant**
- **AC circuit oriented**
- **Glass-passivated junctions**
- **High surge current capability**

Type	Part No.				$I_{T(RMS)}$	V_{DRM}	V_{BO}		I_{DRM}	I_{BO}	I_H	
	TO-92	DO-15X	(10) 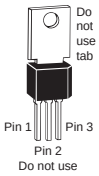 TO-202	DO-214	(6) (7) (8) Amps	Volts	(1) Volts		µAmps	(2) µAmps	(3) (4) mAmps	
	See "Package Dimensions" section for variations. (9)				MAX	MIN	MIN	MAX	MAX	MAX	TYP	MAX
	K0900E70	**K0900G**		**K0900S**	**1**	**±70**	**79**	**97**	**5**	**10**	**60**	**150**
	K1050E70	**K1050G**		**K1050S**	**1**	**±90**	**95**	**113**	**5**	**10**	**60**	**150**
	K1100E70	**K1100G**		**K1100S**	**1**	**±90**	**104**	**118**	**5**	**10**	**60**	**150**
	K1200E70	**K1200G**		**K1200S**	**1**	**±90**	**110**	**125**	**5**	**10**	**60**	**150**
	K1300E70	**K1300G**		**K1300S**	**1**	**±90**	**120**	**138**	**5**	**10**	**60**	**150**
	K1400E70	**K1400G**		**K1400S**	**1**	**±90**	**130**	**146**	**5**	**10**	**60**	**150**
	K1500E70	**K1500G**		**K1500S**	**1**	**±90**	**140**	**170**	**5**	**10**	**60**	**150**
	K2000E70	**K2000G**	**K2000F1**	**K2000S**	**1**	**±180**	**190**	**215**	**5**	**10**	**60**	**150**
	K2200E70	**K2200G**	**K2200F1**	**K2200S**	**1**	**±180**	**205**	**230**	**5**	**10**	**60**	**150**
	K2400E70	**K2400G**	**K2400F1**	**K2400S**	**1**	**±190**	**220**	**250**	**5**	**10**	**60**	**150**
			K2401F1		**(11)**	**±190**	**220**	**250**	**5**	**10**	**60**	**150**
	K2500E70	**K2500G**	**K2500F1**	**K2500S**	**1**	**±200**	**240**	**280**	**5**	**10**	**60**	**150**
			K3000F1		**1**	**±200**	**270**	**330**	**5**	**10**	**60**	**150**

Specific Test Conditions

di/dt — Critical rate-of-rise of on-state current

dv/dt — Critical rate-of-rise of off-state voltage at rated V_{DRM}; $T_J \leq 100$ °C

dV_q/dt — Critical rate-of-rise of turn-off voltage at 8 kHz

I_{BO} — Breakover current 50/60 Hz sine wave

I_{DRM} — Repetitive peak off-state current 50/60 Hz sine wave; V = V_{DRM}

I_H — Dynamic holding current 50/60 Hz sine wave; R = 100 Ω

$I_{T(RMS)}$ — On-state RMS current $T_J \leq 125$ °C 50/60 Hz sine wave

I_{TSM} — Peak one-cycle surge current 50/60 Hz sine wave (non-repetitive)

R_S — Switching resistance $R_S = \frac{(V_{BO} - V_S)}{(I_S - I_{BO})}$ 50/60 Hz sine wave

V_{BO} — Breakover voltage 50/60 Hz sine wave

V_{DRM} — Repetitive peak off-state voltage

V_{TM} — Peak on-state voltage; I_T = 1 A

General Notes

- All measurements are made at 60 Hz with a resistive load at an ambient temperature of +25 °C unless otherwise specified.
- Storage temperature range (T_S) is -65 °C to +150 °C.
- The case (T_C) or lead (T_L) temperature is measured as shown on the dimensional outline drawings in the "Package Dimensions" section of this catalog.
- Junction temperature range (T_J) is -40 °C to +125 °C.
- Lead solder temperature is a maximum of +230 °C for 10 s maximum; ≥1/16" (1.59 mm) from case.

Electrical Specification Notes

(1) See Figure E9.5 for V_{BO} change versus junction temperature.

(2) See Figure E9.6 for I_{BO} versus junction temperature.

(3) See Figure E9.2 for I_H versus case temperature.

(4) See Figure E9.13 for test circuit.

(5) See Figure E9.1 for more than one full cycle rating.

(6) $T_C \leq 90$ °C for TO-92 Sidac
$T_C \leq 105$ °C for TO-202 Sidacs
$T_L \leq 100$ °C for DO-15X
$T_L \leq 90$ °C for DO-214

(7) See Figure E9.14 for clarification of sidac operation.

(8) For best sidac operation, the load impedance should be near or less than switching resistance.

(9) See package outlines for lead form configurations. When ordering special lead forming, add type number as suffix to part number.

(10) Do not use electrically connected mounting tab or center lead.

(11) The K2401F1 sidac is designed to ensure good commutation at higher switching frequencies, as required in ignitor circuits for high intensity discharge (HID) lighting. A typical circuit for a metal halide lamp ignitor is shown in Figure E9.17. With proper component selection this circuit will produce three pulses for ignition of Osram lamp types such as HQI-T70W, HQI-T150W, and HQI-T250W which require a minimum of three pulses at 4 kV magnitude and >1 µs duration each at a minimum repetition rate of 3.3 kHz.

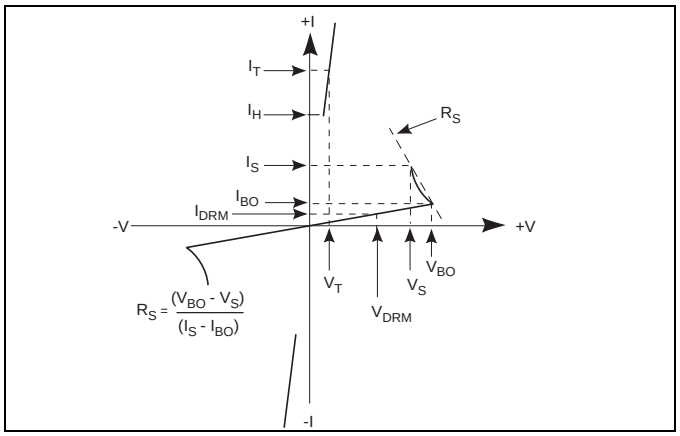

V-I Characteristics

LK

V_{TM}				I_{TSM}		R_S	dV_q/dt	dv/dt	di/dt
				(5)		(8)			
Volts MAX				Amps					
Package				60 Hz	50 Hz	kΩ	Volts/µSec	Volts/µSec	Amps/µSec
E	G	F	S			MIN	MIN	MIN	TYP
1.5	**1.5**		**1.5**	**20**	**16.7**	**0.1**	**20**	**1500**	**150**
1.5	**1.5**		**1.5**	**20**	**16.7**	**0.1**	**20**	**1500**	**150**
1.5	**1.5**		**1.5**	**20**	**16.7**	**0.1**	**20**	**1500**	**150**
1.5	**1.5**		**1.5**	**20**	**16.7**	**0.1**	**20**	**1500**	**150**
1.5	**1.5**		**1.5**	**20**	**16.7**	**0.1**	**20**	**1500**	**150**
1.5	**1.5**		**1.5**	**20**	**16.7**	**0.1**	**20**	**1500**	**150**
1.5	**1.5**		**1.5**	**20**	**16.7**	**0.1**	**20**	**1500**	**150**
1.5	**1.5**	**3**	**1.5**	**20**	**16.7**	**0.1**	**20**	**1500**	**150**
1.5	**1.5**	**3**	**1.5**	**20**	**16.7**	**0.1**	**20**	**1500**	**150**
1.5	**1.5**	**3**	**1.5**	**20**	**16.7**	**0.1**	**20**	**1500**	**150**
		3.3		**20**	**16.7**	**2**	**42**	**1500**	**150**
1.5	**1.5**	**3**	**1.5**	**20**	**16.7**	**0.1**	**20**	**1500**	**150**
		3		**20**	**16.7**	**0.1**	**20**	**1500**	**150**

Thermal Resistance (Steady State) $R_{\theta JC}$ [$R_{\theta JA}$] °C/W (TYPICAL) *			
E Package	G Package	F Package	S Package
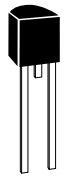		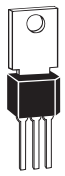	
35 [95]	**18 [75]**	**7 [45] ****	**30 *** [85]**

* See Electrical Specification Note (6).

** $R_{\theta JA}$ for TO-202 Type 23 and Type 41 is 70 °C/Watt.

*** Mounted on 1 cm^2 copper foil surface; two-ounce copper foil

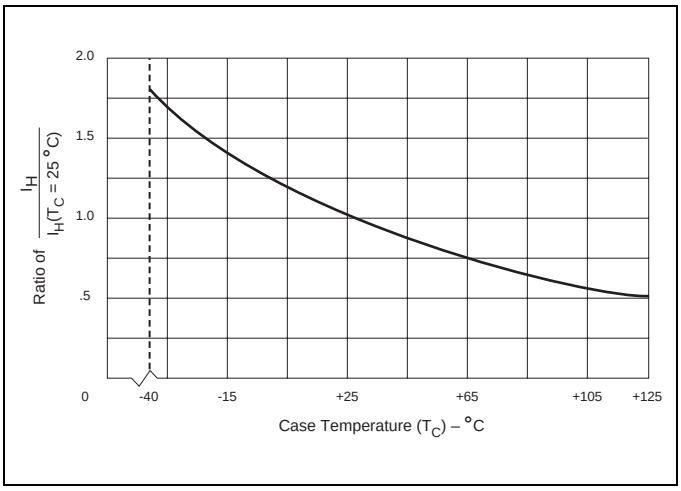

Figure E9.2 Normalized DC Holding Current versus Case/Lead Temperature

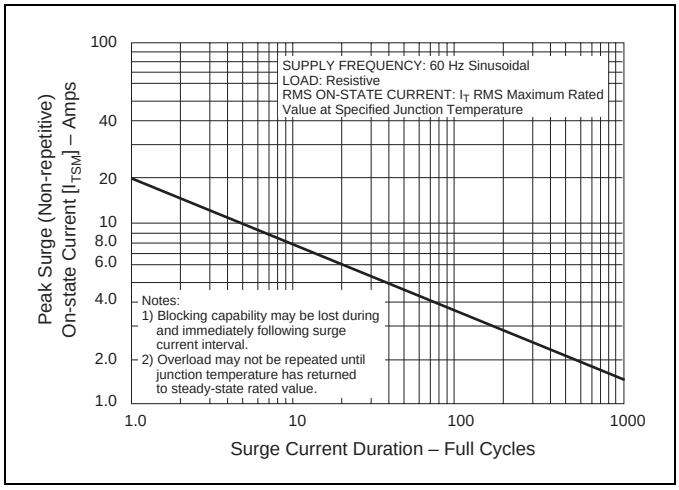

Figure E9.1 Peak Surge Current versus Surge Current Duration

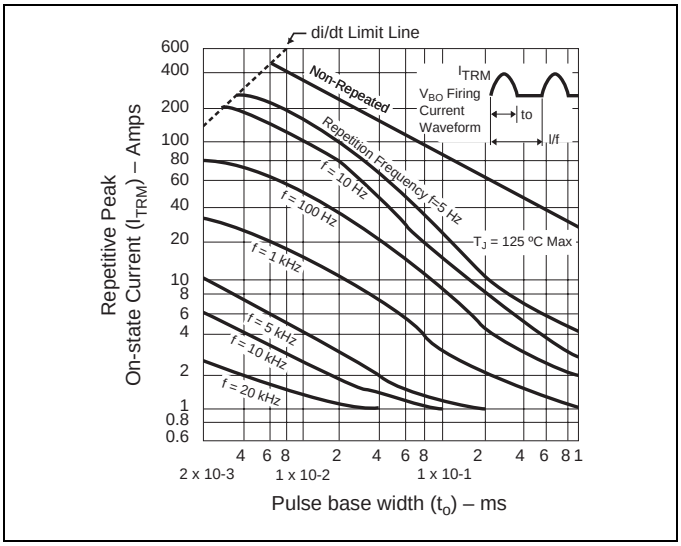

Figure E9.3 Repetitive Peak On-state Current (I_{TRM}) versus Pulse Width at Various Frequencies

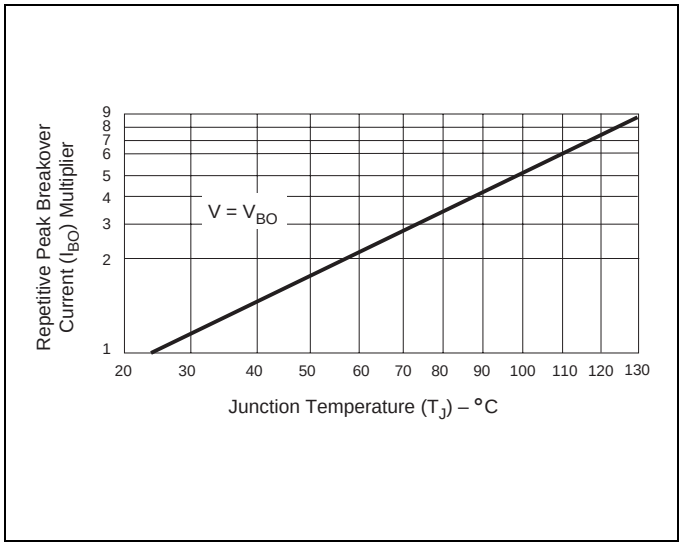

Figure E9.6 Normalized Repetitive Peak Breakover Current versus Junction Temperature

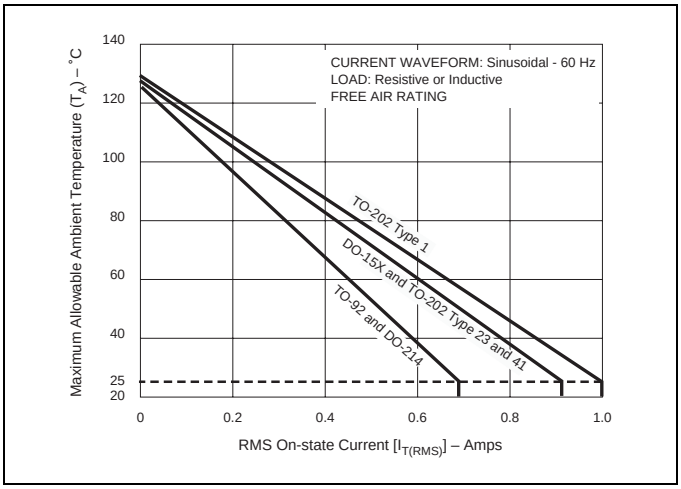

Figure E9.4 Maximum Allowable Ambient Temperature versus On-state Current

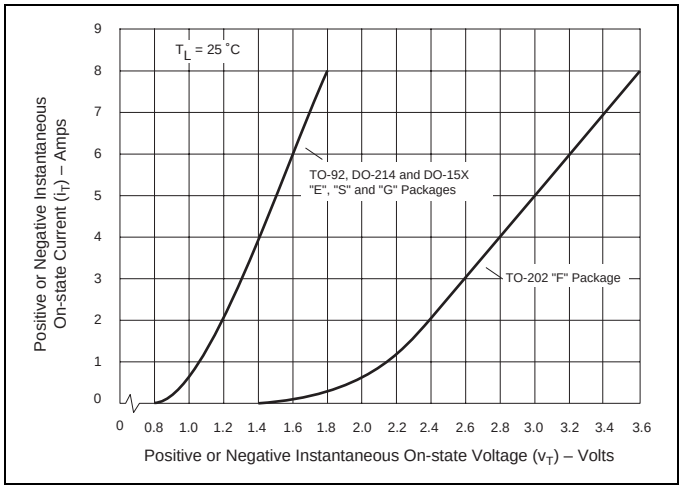

Figure E9.7 On-state Current versus On-state Voltage (Typical)

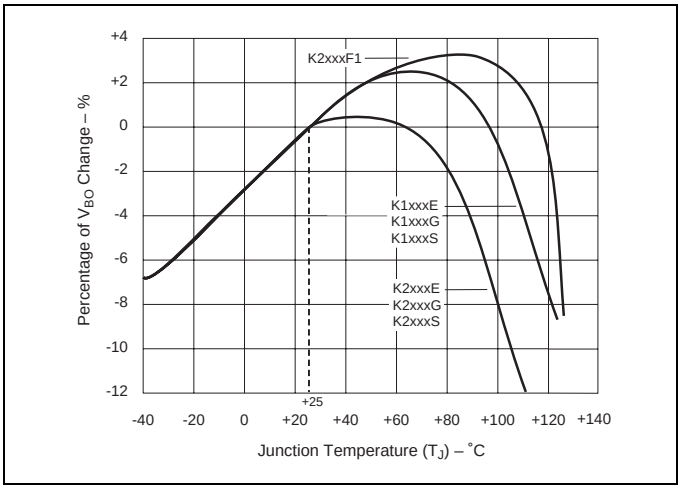

Figure E9.5 Normalized V_{BO} Change versus Junction Temperature

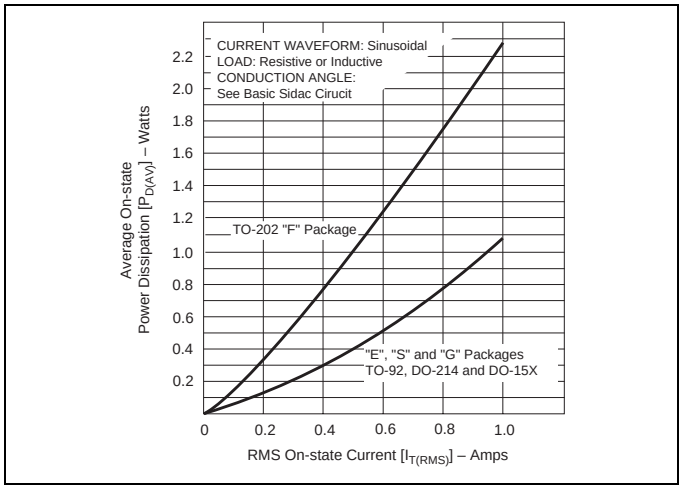

Figure E9.8 Power Dissipation (Typical) versus On-state Current [Refer to Figure E9.14 for Basic Sidac Circuit]

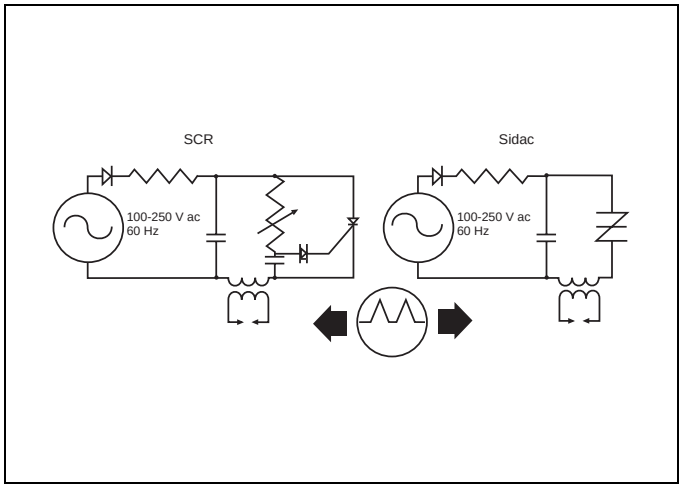

Figure E9.9 Comparison of Sidac versus SCR for Gas Ignitor Circuit

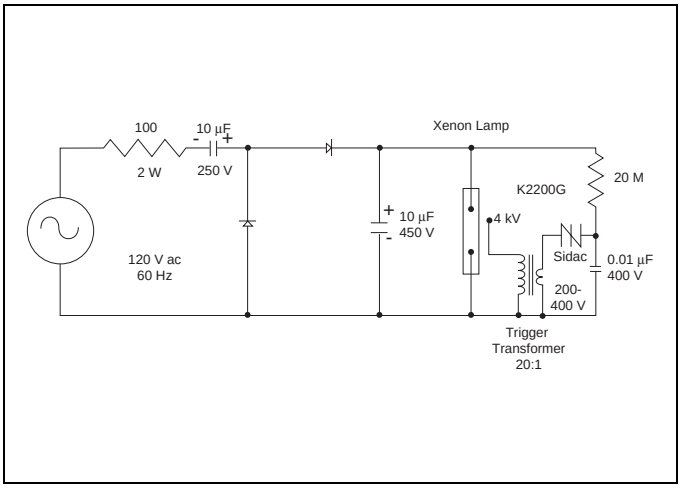

Figure E9.12 Xenon Lamp Flashing Circuit

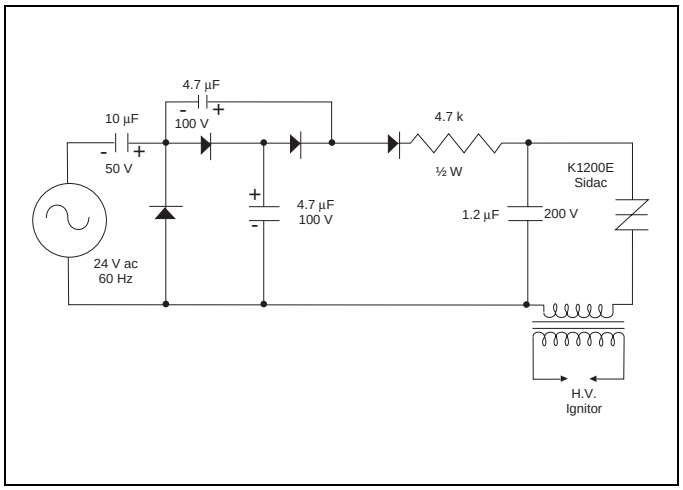

Figure E9.10 Circuit (Low Voltage Input) for Gas Ignition

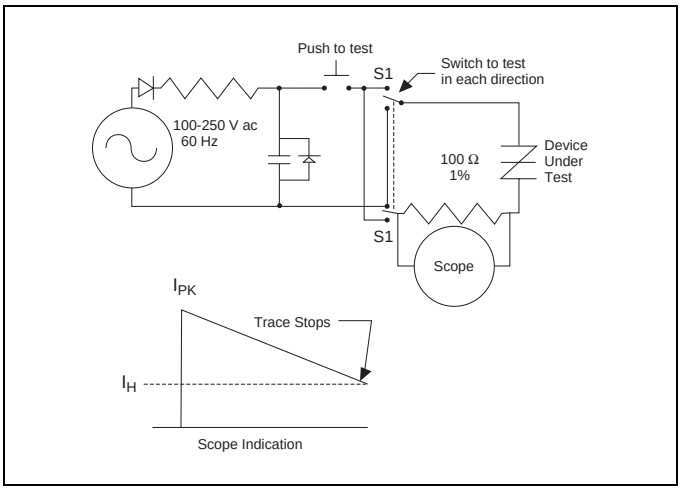

Figure E9.13 Dynamic Holding Current Test Circuit for Sidacs

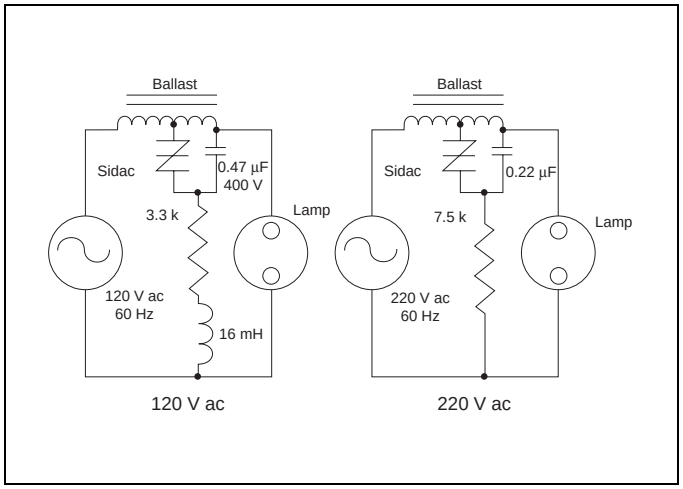

Figure E9.11 Typical High Pressure Sodium Lamp Firing Circuit

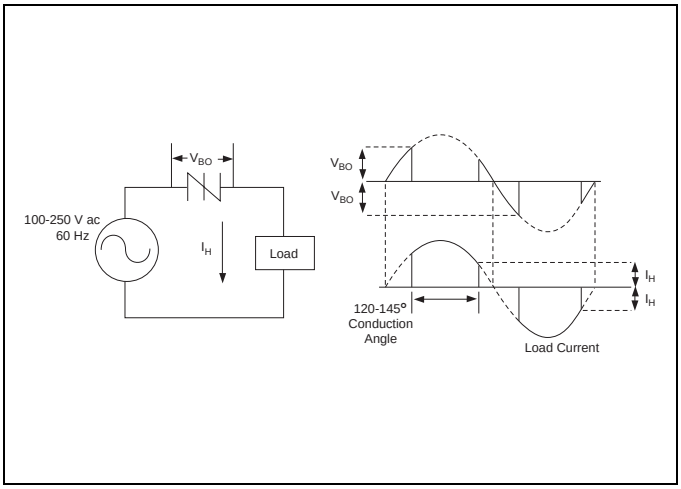

Figure E9.14 Basic Sidac Circuit

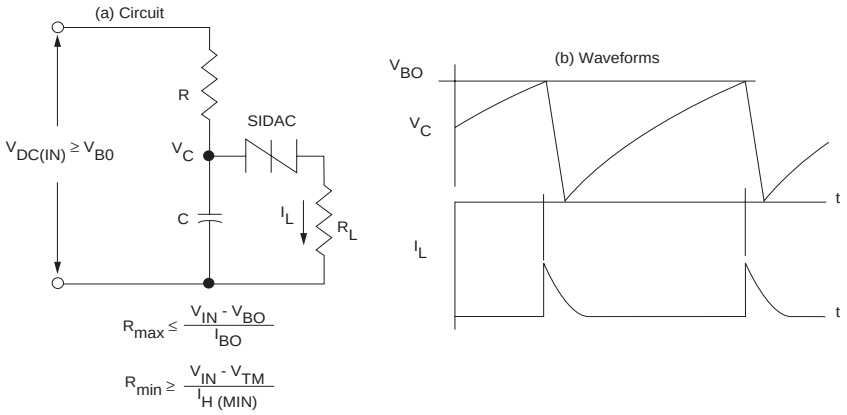

Figure E9.15 Relaxation Oscillator Using a Sidac

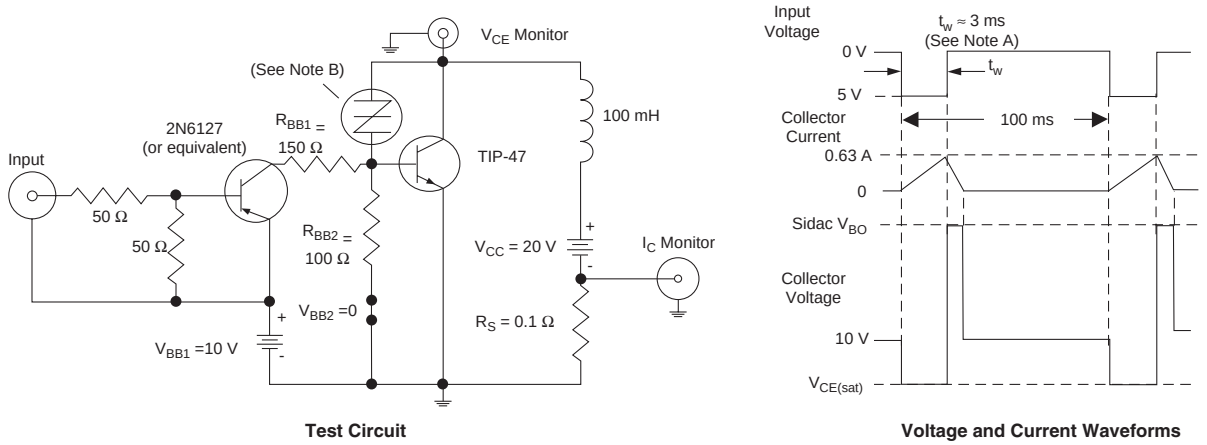

Test Circuit **Voltage and Current Waveforms**

Note A: Input pulse width is increased until I_{CM} = 0.63 A.

Note B: Sidac (or Diac or series of Diacs) chosen so that V_{BO} is just below V_{CEO} rating of transistor to be protected. The Sidac (or Diac) eliminates a reverse breakdown of the transistor in inductive switching circuits where otherwise the transistor could be destroyed.

Figure E9.16 Sidac Added to Protect Transistor for Typical Transistor Inductive Load Switching Requirements

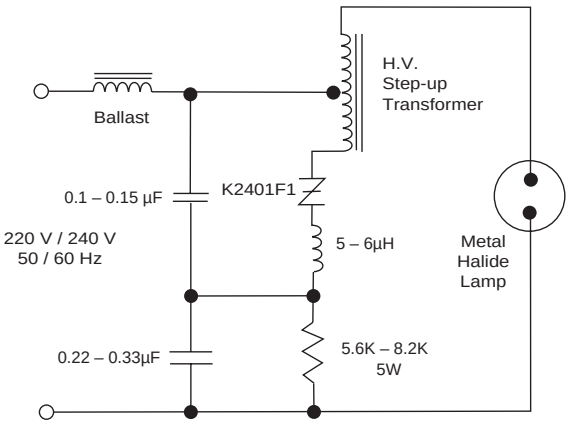

Figure E9.17 Typical Metal Halide Ignitor Circuit

AMEYA360
Components Supply Platform

Authorized Distribution Brand :

Website :

Welcome to visit www.ameya360.com

Contact Us :

- ## Address :

401 Building No.5, JiuGe Business Center, Lane 2301, Yishan Rd
Minhang District, Shanghai , China

- ## Sales :

Direct +86 (21) 6401-6692

Email amall@ameya360.com

QQ 800077892

Skype ameyasales1 ameyasales2

- ## Customer Service :

Email service@ameya360.com

- ## Partnership :

Tel +86 (21) 64016692-8333

Email mkt@ameya360.com