PART NAME	CABLE MANAGEMENT PANEL 1U	PART No.	CM-1225

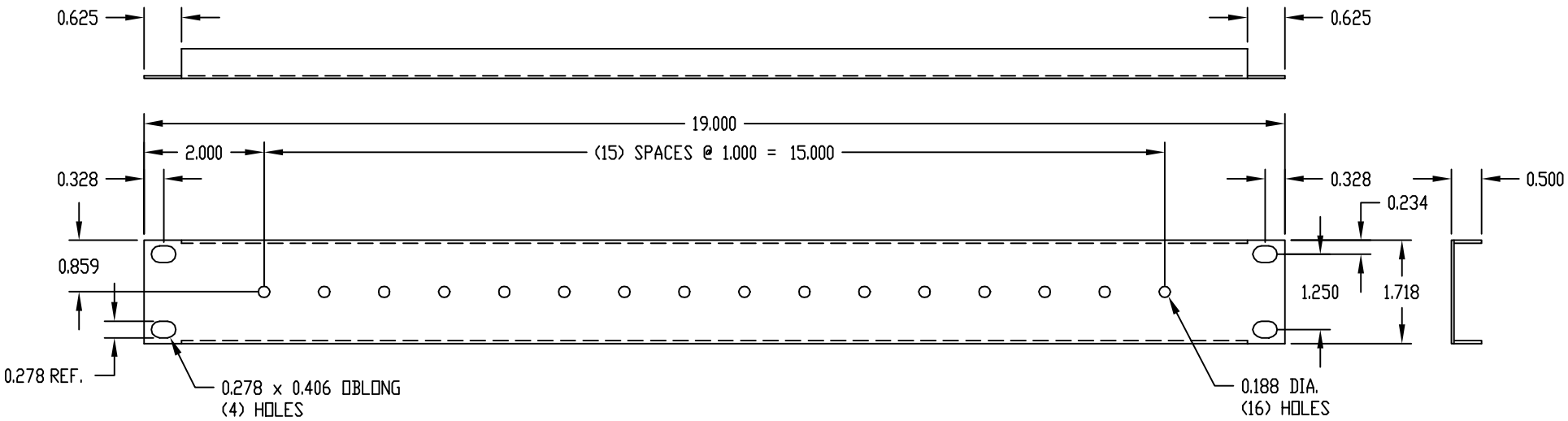

MATERIAL:
- PANEL _____ 18 GA. STEEL
- CABLE CLIPS _____ NYLON

FINISH:
- PANEL _____ SMOOTH BLACK
- CABLE CLIPS _____ WHITE

SUPPLIED WITH:
- QTY. (4) #10-32 x 5/8 LG. SCREWS
- QTY. (4) #12-24 x 1/2 LG. SCREWS
- QTY. (12) CABLE CLIPS (PKG. #CM-1229)

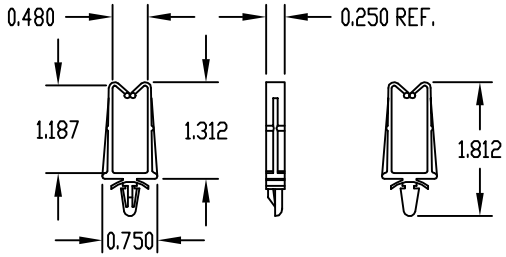

CABLE CLIP

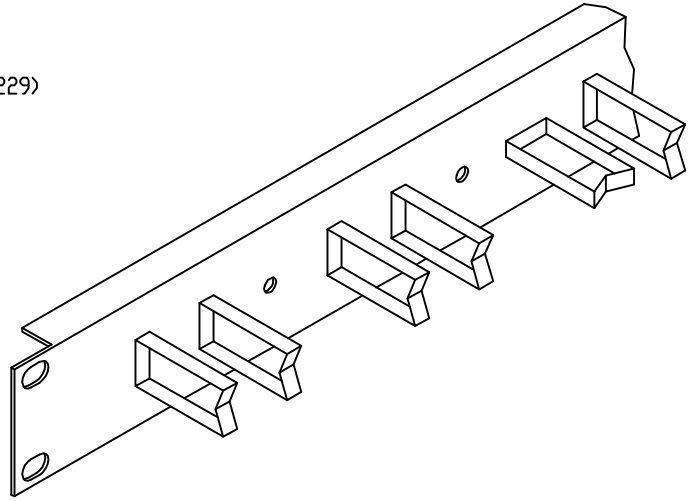

AMEYA360
Components Supply Platform

Authorized Distribution Brand :

Website :

Welcome to visit www.ameya360.com

Contact Us :

- ### Address :

  401 Building No.5, JiuGe Business Center, Lane 2301, Yishan Rd
  Minhang District, Shanghai , China

- ### Sales :

  Direct +86 (21) 6401-6692

  Email amall@ameya360.com

  QQ 800077892

  Skype ameyasales1 ameyasales2

- ### Customer Service :

  Email service@ameya360.com

- ### Partnership :

  Tel +86 (21) 64016692-8333

  Email mkt@ameya360.com