Product data sheet
Characteristics

XB5RMA04
Pack SPS - XB5 - plastic handy box - progammable receiver - 24..240 V AC/DC

Main

Range of product	Harmony XB5R
Product or component type	Wireless and batteryless package
Device short name	XB5R
Head material	Plastic
Kit composition	1 plastic pushbutton, 1 receiver and 1 set of caps
Device composition	ZBA79 ZBRRA ZBRT1 ZB5AZ009 ZB5RZA0 ZBRM01

Complementary

Control type	Wireless and batteryless pushbutton handy box assembled on fixing collar
Type of receiver	Programmable receiver (2 relays)
[Us] rated supply voltage	24...240 V AC/DC 50/60 Hz
Status LED	1 LED green and yellow for reception signal 2 LEDs green for function mode 2 LEDs green for relay ON 1 LED green for power ON

Environment

Product certifications	CSA C-Tick GOST UL ANATEL SRRC
Marking	CE
Standards	IEC 6100-4-2 IEC 6100-4-3 IEC 6100-4-4 IEC 6100-4-5 IEC 6100-4-6 IEC 6100-4-11

Offer Sustainability

Sustainable offer status	Not Green Premium product
Product environmental profile	Available
Product end of life instruction	Available

The information provided in this documentation contains general descriptions and/or technical characteristics of the performance of the products contained herein.
This documentation is not intended as a substitute for and is not to be used for determining suitability or reliability of these products for specific user applications.
It is the duty of any such user or integrator to perform the appropriate and complete risk analysis, evaluation and testing of the products with respect to the relevant specific application or use thereof.
Neither Schneider Electric Industries SAS nor any of its affiliates or subsidiaries shall be responsible or liable for misuse of the information contained herein.

Programmable Receiver

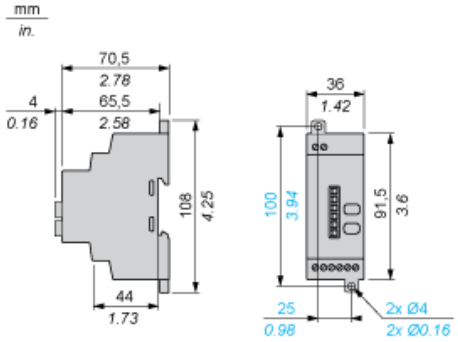

Wireless and Batteryless Pushbutton - Transmitter

Plastic Handy Box for Mobile Use

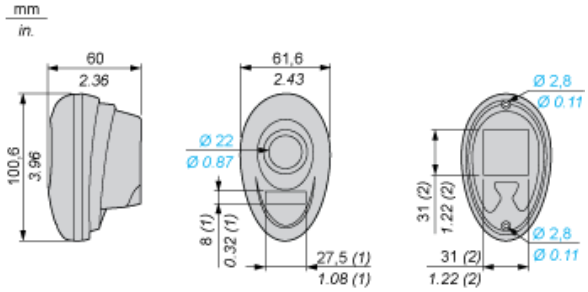

(1) Location for ZBY0101T legend.
(2) Location for magnet to be stuck on by the customer.

Receiver Clearance

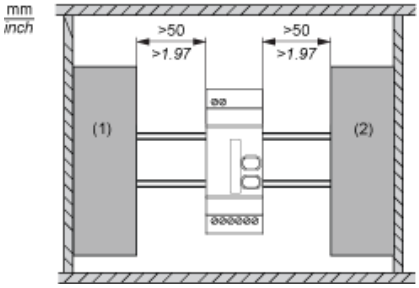

(1) Drive
(2) Power Supply or PLC

Receiver Mounting

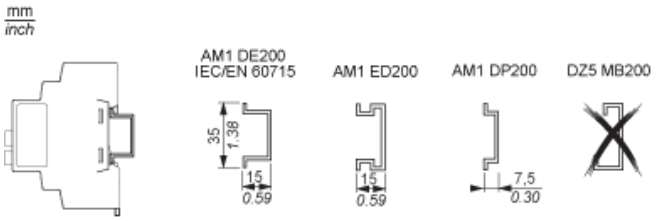

XB5RMA04

Programmable Receiver

Wiring Diagram

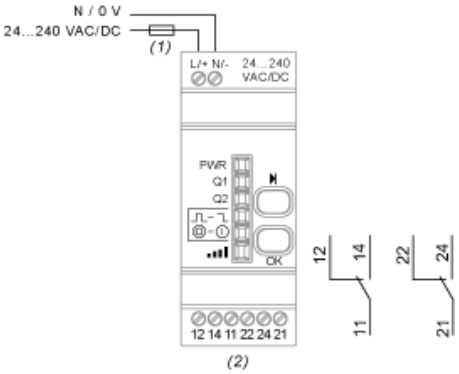

(1) 400 mA fast-blow fuse
(2) Imax = 3 A

AMEYA360
Components Supply Platform

Authorized Distribution Brand :

Website :

Welcome to visit www.ameya360.com

Contact Us :

Address :

401 Building No.5, JiuGe Business Center, Lane 2301, Yishan Rd
Minhang District, Shanghai , China

Sales :

Direct +86 (21) 6401-6692

Email amall@ameya360.com

QQ 800077892

Skype ameyasales1 ameyasales2

Customer Service :

Email service@ameya360.com

Partnership :

Tel +86 (21) 64016692-8333

Email mkt@ameya360.com