LOW POWER DC/DC BOOST CONVERTER IN SOT-23 PACKAGE

Check for Samples: TPS61040-Q1, TPS61041-Q1

FEATURES

- **Qualified For Automotive Application**
- **1.8-V to 6-V Input Voltage Range**
- **Adjustable Output Voltage Range Up to 28 V**
- **400-mA (TPS61040) and 250-mA (TPS61041) Internal Switch Current**
- **Up to 1-MHz Switching Frequency**
- **28-µA Typical No Load Quiescent Current**
- **1-µA Typical Shutdown Current**
- **Internal Softstart**
- **Available in a Tiny 5-Pin SOT23 Package**

APPLICATIONS

- **LCD Bias Supply**
- **White-LED Supply for LCD Backlights**
- **Digital Still Camera**
- **PDAs, Organizers, and Handheld PCs**
- **Cellular Phones**
- **Internet Audio Player**
- **Standard 3.3 V/5 V to 12 V Conversion**

DESCRIPTION

The TPS61040/41 is a high-frequency boost converter dedicated for small to medium LCD bias supply and white LED backlight supplies. The device is ideal to generate output voltages up to 28 V from a dual cell NiMH/NiCd or a single cell Li-Ion battery. The part can also be used to generate standard 3.3 V/5 V to 12-V power conversions.

The TPS61040/41 operates with a switching frequency up to 1 MHz. This allows the use of small external components using ceramic as well as tantalum output capacitors. Together with the tiny SOT23 package, the TPS61040/41 gives a small overall solution size. The TPS61040 has an internal 400-mA switch current limit, while the TPS61041 has a 250-mA switch current limit, offering lower output voltage ripple and allows the use of a smaller form factor inductor for lower power applications. The low quiescent current (typically 28 µA) together with an optimized control scheme, allows device operation at high efficiencies over the entire load current range.

DBV PACKAGE
(TOP VIEW)

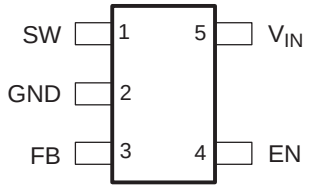

TYPICAL APPLICATION

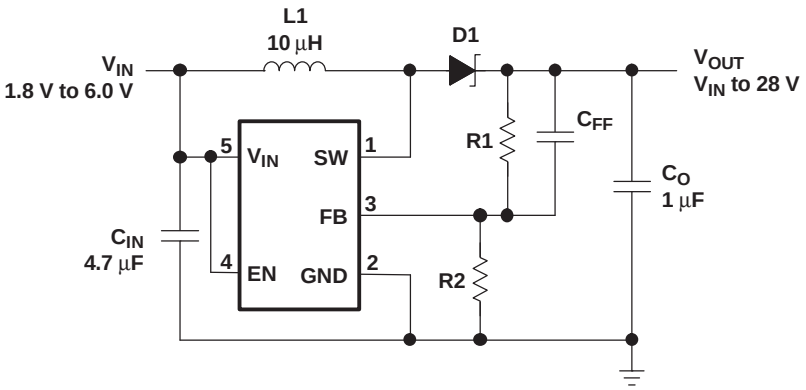

EFFICIENCY
vs
OUTPUT CURRENT

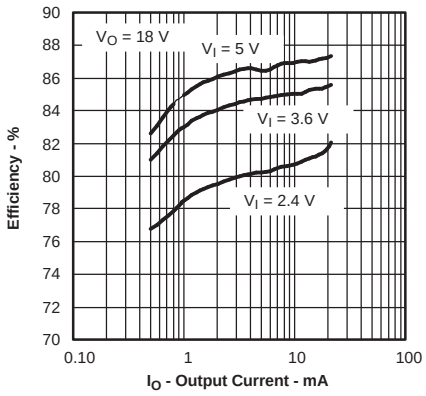

Please be aware that an important notice concerning availability, standard warranty, and use in critical applications of Texas Instruments semiconductor products and disclaimers thereto appears at the end of this data sheet.

PRODUCTION DATA information is current as of publication date. Products conform to specifications per the terms of the Texas Instruments standard warranty. Production processing does not necessarily include testing of all parameters.

Copyright © 2005–2012, Texas Instruments Incorporated

This integrated circuit can be damaged by ESD. Texas Instruments recommends that all integrated circuits be handled with appropriate precautions. Failure to observe proper handling and installation procedures can cause damage.

ESD damage can range from subtle performance degradation to complete device failure. Precision integrated circuits may be more susceptible to damage because very small parametric changes could cause the device not to meet its published specifications.

ORDERING INFORMATION (1) (2)

T_J	SWITCH CURRENT LIMIT	SOT23 PACKAGE(3)	PACKAGE MARKING
-40°C to 125°C	400 mA	TPS61040QDBVRQ1	PHOQ
	250 mA	TPS61041QDBVRQ1	PHPQ

(1) For the most current package and ordering information, see the Package Option Addendum at the end of this document, or see the TI web site at www.ti.com.
(2) The DBV package is available in tape and reel. Add R suffix (DBVR) to order quantities of 3000 parts.
(3) Package drawings, thermal data, and symbolization are available at www.ti.com/packaging.

FUNCTIONAL BLOCK DIAGRAM

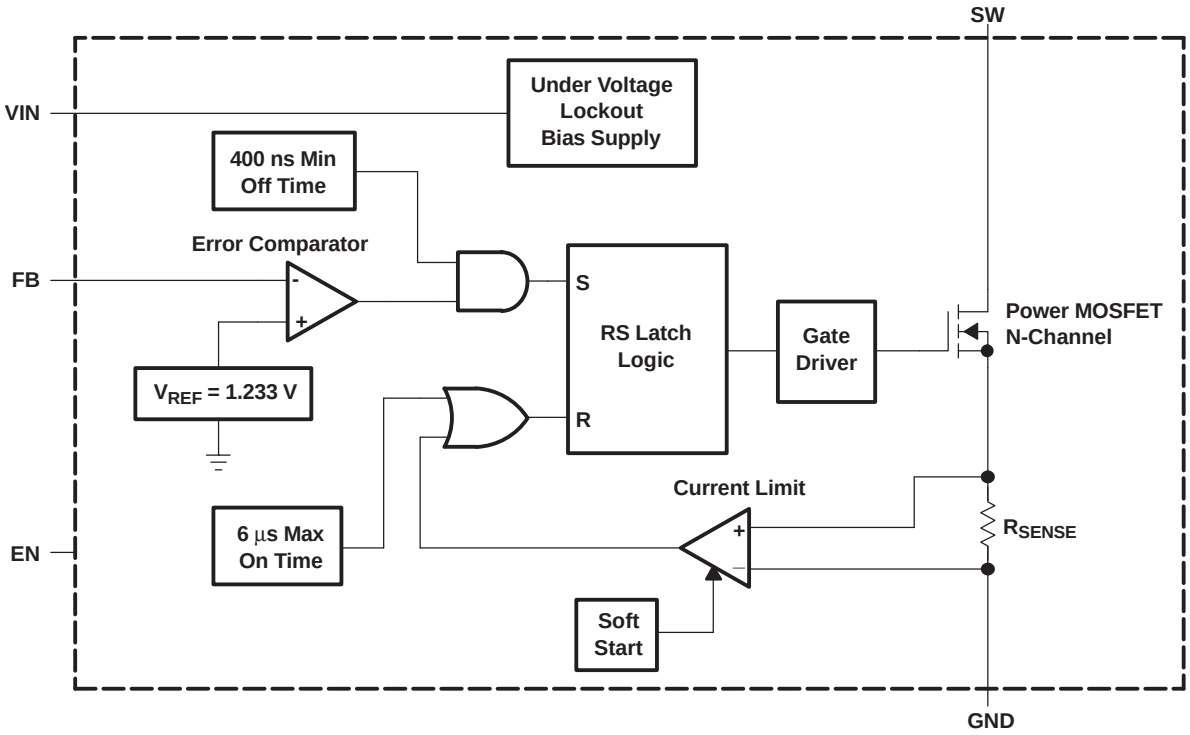

Terminal Functions

TERMINAL NAME	TERMINAL NO.	I/O	DESCRIPTION
SW	1	I	Connect the inductor and the Schottky diode to this pin. This is the switch pin and is connected to the drain of the internal power MOSFET.
GND	2		Ground
FB	3	I	This is the feedback pin of the device. Connect this pin to the external voltage divider to program the desired output voltage.
EN	4	I	This is the enable pin of the device. Pulling this pin to ground forces the device into shutdown mode reducing the supply current to less than 1 µA. This pin should not be left floating and needs to be terminated.
VIN	5	I	Supply voltage pin

Copyright © 2005–2012, Texas Instruments Incorporated

DETAILED DESCRIPTION

OPERATION

The TPS61040/41 operates with an input voltage range of 1.8 V to 6 V and can generate output voltages up to 28 V. The device operates in a pulse frequency modulation (PFM) scheme with constant peak current control. This control scheme maintains high efficiency over the entire load current range, and with a switching frequency up to 1 MHz, the device enables the use of very small external components.

The converter monitors the output voltage, and as soon as the feedback voltage falls below the reference voltage of typically 1.233 V, the internal switch turns on and the current ramps up. The switch turns off as soon as the inductor current reaches the internally set peak current of typically 400 mA (TPS61040) or 250 mA (TPS61041). See the *Peak Current Control* section for more information. The second criteria that turns off the switch is the maximum on-time of 6 µs (typical). This is just to limit the maximum on-time of the converter to cover for extreme conditions. As the switch is turned off, the external Schottky diode is forward biased delivering the current to the output. The switch remains off for a minimum of 400 ns (typical), or until the feedback voltage drops below the reference voltage again. Using this PFM peak current control scheme, the converter operates in discontinuous conduction mode (DCM) where the switching frequency depends on the output current, which results in high efficiency over the entire load current range. This regulation scheme is inherently stable, allowing a wider selection range for the inductor and output capacitor.

PEAK CURRENT CONTROL

The internal switch turns on until the inductor current reaches the typical dc current limit (I_{LIM}) of 400 mA (TPS61040) or 250 mA (TPS61042). Due to the internal propagation delay of typical 100 ns, the actual current exceeds the dc-current limit threshold by a small amount. The typical peak current limit can be calculated:

$$I_{peak(typ)} = I_{LIM} + \frac{Vin}{L} \times 100\ ns$$

$$I_{peak(typ)} = 400\ mA + \frac{Vin}{L} \times 100\ ns \text{ for the TPS61040}$$

$$I_{peak(typ)} = 250\ mA + \frac{Vin}{L} \times 100\ ns \text{ for the TPS61041} \quad (1)$$

The higher the input voltage and the lower the inductor value, the greater the peak.

By selecting the TPS61040 or TPS61041, it is possible to tailor the design to the specific application current limit requirements. A lower current limit supports applications requiring lower output power and allows the use of an inductor with a lower current rating and a smaller form factor. A lower current limit usually has a lower output voltage ripple as well.

SOFTSTART

All inductive step-up converters exhibit high inrush current during start-up if no special precaution is made. This can cause voltage drops at the input rail during start up and may result in an unwanted or early system shut down.

The TPS61040/41 limits this inrush current by increasing the current limit in two steps starting from $\frac{I_{LIM}}{4}$ for 256 cycles to $\frac{I_{LIM}}{2}$ for the next 256 cycles, and then full current limit (see Figure 14).

Copyright © 2005–2012, Texas Instruments Incorporated

ENABLE

Pulling the enable (EN) to ground shuts down the device reducing the shutdown current to 1 µA (typical). Since there is a conductive path from the input to the output through the inductor and Schottky diode, the output voltage is equal to the input voltage during shutdown. The enable pin needs to be terminated and should not be left floating. Using a small external transistor disconnects the input from the output during shutdown as shown in Figure 18.

UNDERVOLTAGE LOCKOUT

An undervoltage lockout prevents misoperation of the device at input voltages below typical 1.5 V. When the input voltage is below the undervoltage threshold the main switch is turned off.

THERMAL SHUTDOWN

An internal thermal shutdown is implemented and turns off the internal MOSFETs when the typical junction temperature of 168°C is exceeded. The thermal shutdown has a hysteresis of typically 25°C. This data is based on statistical means and is not tested during the regular mass production of the IC.

ABSOLUTE MAXIMUM RATINGS

over operating free-air temperature (unless otherwise noted) (1)

		UNIT
	Supply voltages on pin VIN (2)	-0.3 V to 7 V
	Voltages on pins EN, FB (2)	-0.3 V to V_{IN} + 0.3 V
	Switch voltage on pin SW (2)	30 V
	Continuous power dissipation	See Dissipation Rating Table
T_J	Operating junction temperature	-40°C to 150°C
T_{Stg}	Storage temperature	-65°C to 150°C
	Lead temperature (soldering 10 seconds)	260°C

(1) Stresses beyond those listed under absolute maximum ratings may cause permanent damage to the device. These are stress ratings only, and functional operation of the device at these or any other conditions beyond those indicated under recommended operating conditions is not implied. Exposure to absolute-maximum-rated conditions for extended periods may affect device reliability.
(2) All voltage values are with respect to network ground terminal.

DISSIPATION RATING TABLE(1)

PACKAGE	T_A ≤ 25°C POWER RATING	DERATING FACTOR ABOVE T_A = 25°C	T_A = 70°C POWER RATING	T_A = 85°C POWER RATING
DBV	357 mW	3.5 mW/°C	192 mW	140 mW

(1) The thermal resistance junction to ambient of the 5-pin SOT23 is 250°C/W.

RECOMMENDED OPERATING CONDITIONS

		MIN	TYP	MAX	UNIT
V_{IN}	Input voltage range	1.8		6	V
V_{OUT}	Output voltage range			28	V
L	Inductor(1)	2.2	10		µH
f	Switching frequency(1)			1	MHz
C_{IN}	Input capacitor (1)		4.7		µF
C_{OUT}	Output capacitor (1)	1			µF
T_J	Operating junction temperature	-40		125	°C

(1) See *Application Information* for further information.

Copyright © 2005–2012, Texas Instruments Incorporated

ELECTRICAL CHARACTERISTICS

V_{IN} = 2.4 V, EN = V_{IN}, T_J = -40°C to 125°C, typical values are at T_A = 25°C (unless otherwise noted)

PARAMETER		TEST CONDITIONS		MIN	TYP	MAX	UNIT
SUPPLY CURRENT							
V_{IN}	Input voltage range			1.8		6	V
I_Q	Operating quiescent current	I_{OUT} = 0 mA, not switching, V_{FB} = 1.3 V			28	50	µA
I_{SD}	Shutdown current	EN = GND			0.1	1	µA
V_{UVLO}	Under-voltage lockout threshold				1.5	1.7	V
ENABLE							
V_{IH}	EN high level input voltage			1.3			V
V_{IL}	EN low level input voltage					0.4	V
I_I	EN input leakage current	EN = GND or V_{IN}			0.1	1	µA
POWER SWITCH AND CURRENT LIMIT							
Vsw	Maximum switch voltage					30	V
t_{off}	Minimum off time			250	400	550	ns
t_{on}	Maximum on time			4	6	7.5	µs
$R_{DS(ON)}$	MOSFET on-resistance	V_{IN} = 2.4 V; Isw = 200 mA; TPS61040			600	1100	mΩ
$R_{DS(ON)}$	MOSFET on-resistance	V_{IN} = 2.4 V; Isw = 200 mA; TPS61041			750	1300	mΩ
	MOSFET leakage current	V_{sw} = 28 V			1	10	µA
I_{LIM}	MOSFET current limit	TPS61040		325	400	500	mA
I_{LIM}	MOSFET current limit	TPS61041		200	250	325	mA
OUTPUT							
V_{OUT}	Adjustable output voltage range (1)			V_{IN}		28	V
V_{ref}	Internal voltage reference				1.233		V
I_{FB}	Feedback input bias current	V_{FB} = 1.3 V				1	µA
V_{FB}	Feedback trip point voltage	1.8 V ≤ V_{IN} ≤ 6 V	T_J = -40°C to 85°C	1.208	1.233	1.258	V
			T_J = -40°C to 125°C	1.2	1.233	1.27	
	Line regulation (2)	1.8 V ≤ V_{IN} ≤ 6 V; V_{OUT} = 18 V; I_{load} = 10 mA; Cff = not connected			0.05		%/V
	Load regulation (2)	V_{IN} = 2.4 V; V_{OUT} = 18 V; 0 mA ≤ I_{OUT} ≤ 30 mA			0.15		%/mA

(1) Cannot be production tested. Assured by design.
(2) The line and load regulation depend on the external component selection. See the *Application Section* for further information.

Copyright © 2005–2012, Texas Instruments Incorporated

TYPICAL CHARACTERISTICS

Table of Graphs

			FIGURE
η	Efficiency	vs Load current	1, 2, 3
		vs Input voltage	4
I_Q	Quiescent current	vs Input voltage and temperature	5
V_{FB}	Feedback voltage	vs Temperature	6
I_{SW}	Switch current limit	vs Temperature	7
I_{CL}	Switch current limit	vs Supply voltage, TPS61041	8
		vs Supply voltage, TPS61040	9
RDS_{on}	RDSon	vs Temperature	10
		vs Supply voltage	11
	Line transient response		12
	Load transient response		13
	Start-up behavior		14

EFFICIENCY vs OUTPUT CURRENT

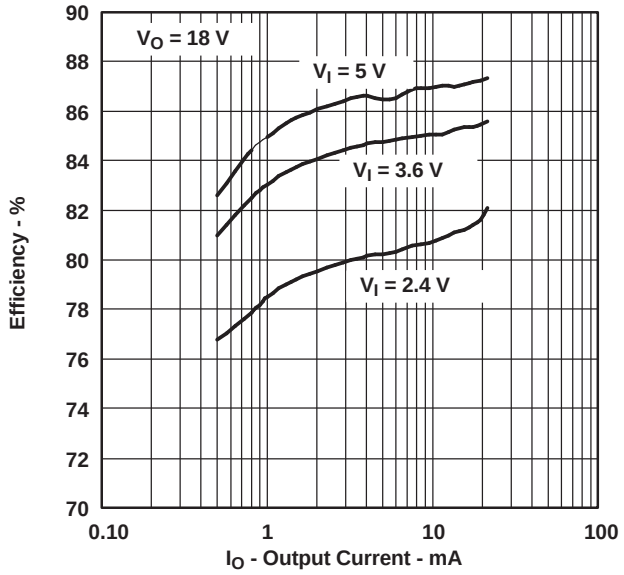

Figure 1.

EFFICIENCY vs LOAD CURRENT

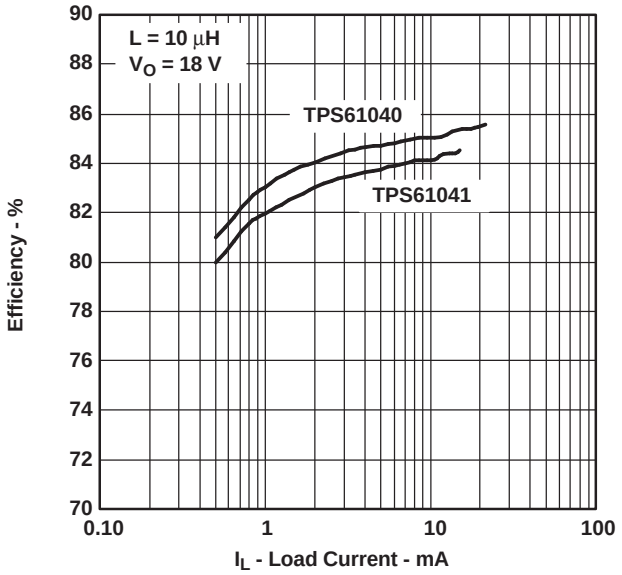

Figure 2.

Copyright © 2005–2012, Texas Instruments Incorporated

EFFICIENCY vs LOAD CURRENT

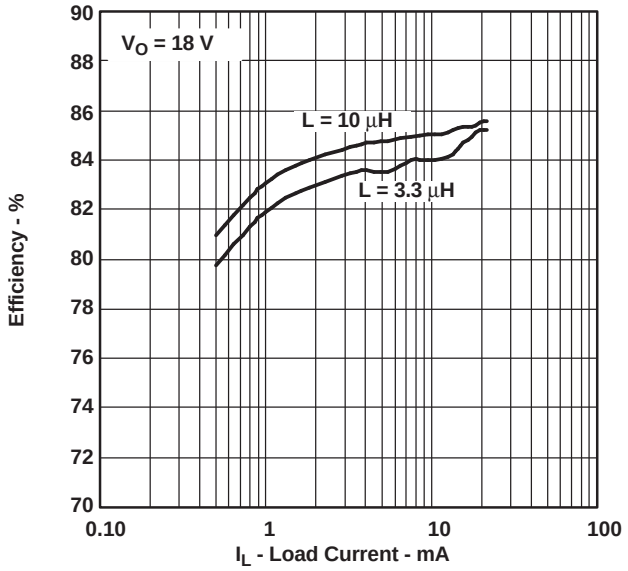

Figure 3.

EFFICIENCY vs INPUT VOLTAGE

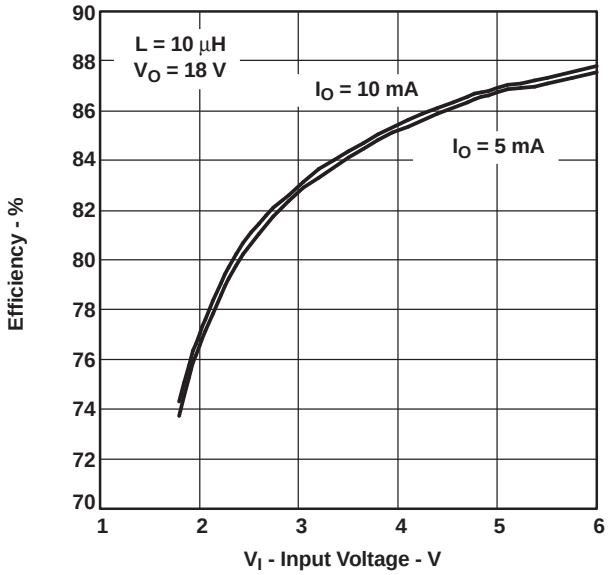

Figure 4.

TPS61040 QUIESCENT CURRENT vs INPUT VOLTAGE

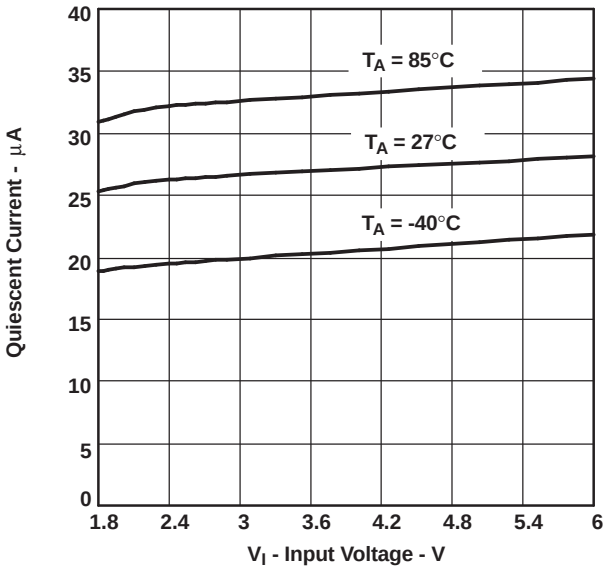

Figure 5.

FEEDBACK VOLTAGE vs FREE-AIR TEMPERATIRE

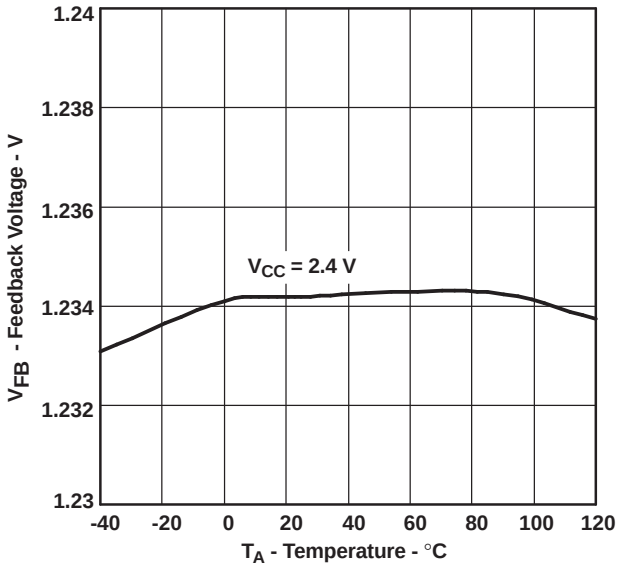

Figure 6.

Copyright © 2005–2012, Texas Instruments Incorporated

TPS61040/41
SWITCH CURRENT LIMIT
vs
FREE-AIR TEMPERATURE

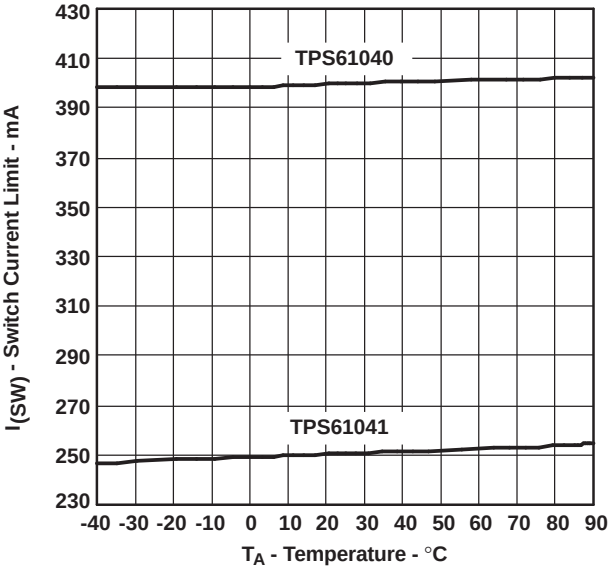

Figure 7.

TPS61041
CURRENT LIMIT
vs
SUPPLY VOLTAGE

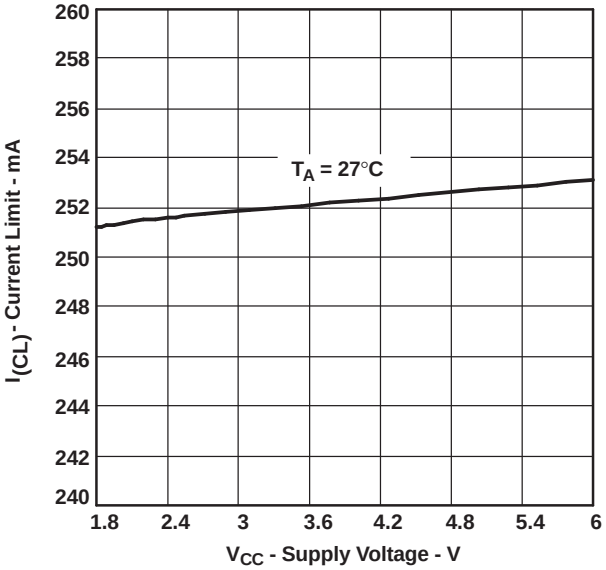

Figure 8.

TPS61040
CURRENT LIMIT
vs
SUPPLY VOLTAGE

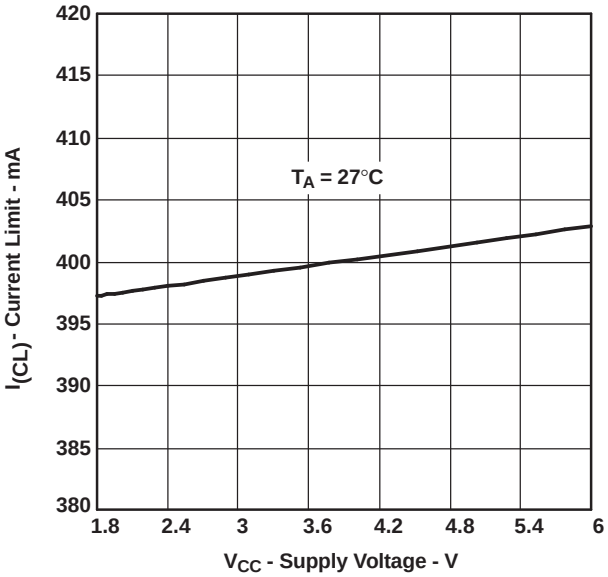

Figure 9.

TPS61040/41
STATIC DRAIN-SOURCE ON-STATE RESISTANCE
vs
FREE-AIR TEMPERATURE

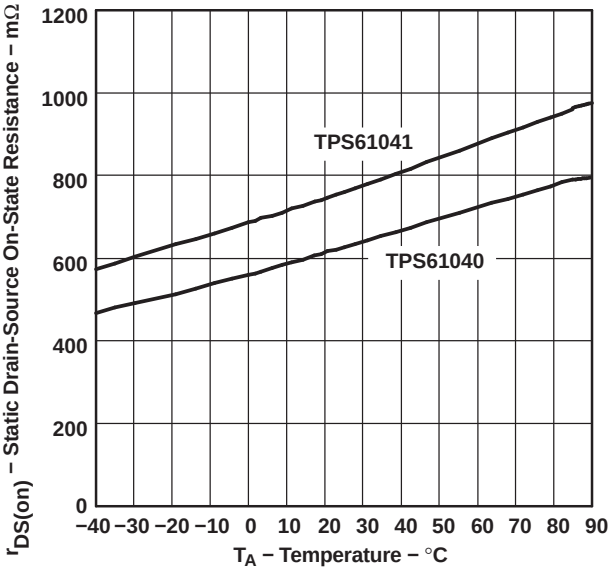

Figure 10.

Copyright © 2005–2012, Texas Instruments Incorporated

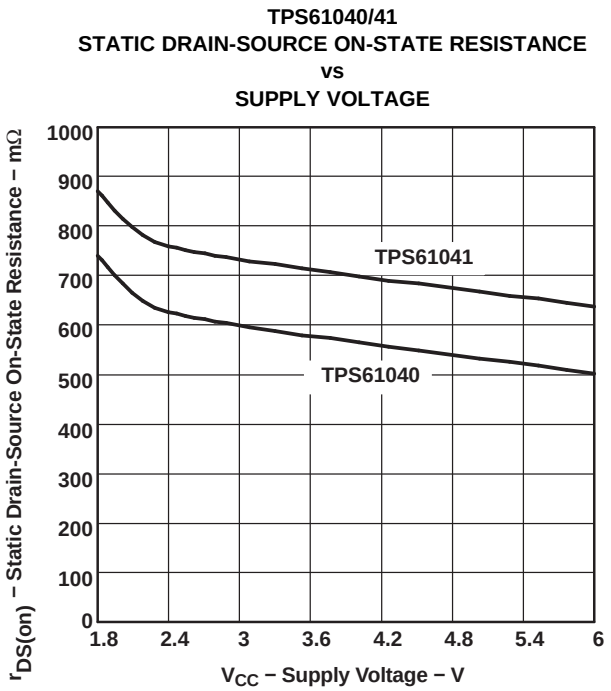

Figure 11.

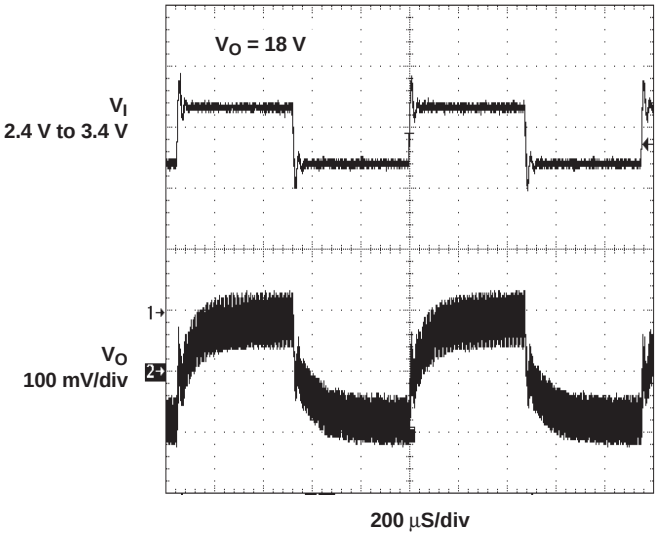

Figure 12. Line Transient Response

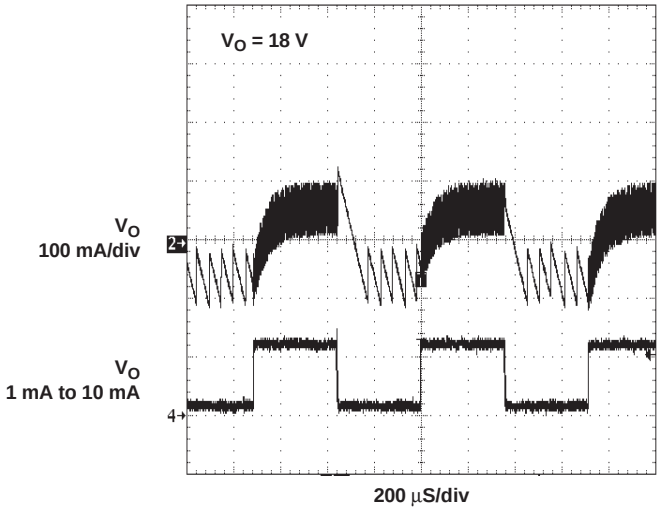

Figure 13. Load Transient Rresponse

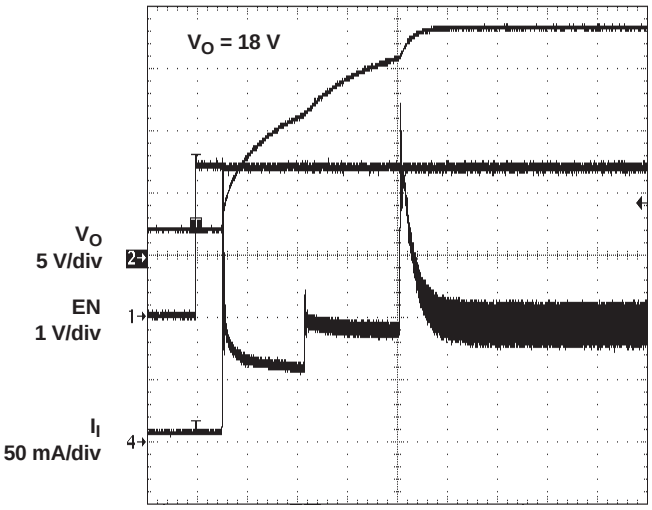

Figure 14. Start-Up Behavior

Copyright © 2005–2012, Texas Instruments Incorporated

APPLICATION INFORMATION

INDUCTOR SELECTION, MAXIMUM LOAD CURRENT

Since the PFM peak current control scheme is inherently stable, the inductor value does not affect the stability of the regulator. The selection of the inductor together with the nominal load current, input and output voltage of the application determines the switching frequency of the converter. Depending on the application, inductor values between 2.2 µH up to 47 µH are recommended. The maximum inductor value is determined by the maximum on time of the switch, typically 6 µs. The peak current limit of 400 mA/250 mA (typically) should be reached within this 6-µs period for proper operation.

The inductor value determines the maximum switching frequency of the converter. Therefore, select the inductor value that ensures the maximum switching frequency at the converter maximum load current is not exceeded. The maximum switching frequency is calculated by the following formula:

$$fS_{max} = \frac{Vin_{min} \times (Vout - Vin)}{I_P \times L \times Vout}$$

Where:

I_P = Peak current as described in the previous *peak current control* section

L = Selected inductor value

Vin_{min} = The highest switching frequency occurs at the minimum input voltage (2)

If the selected inductor value does not exceed the maximum switching frequency of the converter, the next step is to calculate the switching frequency at the nominal load current using the following formula:

$$fS\left(I_{load}\right) = \frac{2 \times I_{load} \times (Vout - Vin + Vd)}{I_P^2 \times L}$$

Where:

I_P = Peak current as described in the previous *peak current control* section

L = Selected inductor value

I_{load} = Nominal load current

Vd = Rectifier diode forward voltage (typically 0.3 V) (3)

A smaller inductor value gives a higher converter switching frequency, but lowers the efficiency.

The inductor value has less effect on the maximum available load current and is only of secondary order. The best way to calculate the maximum available load current under certain operating conditions is to estimate the expected converter efficiency at the maximum load current. This number can be taken out of the efficiency graphs shown in Figure 1, Figure 2, Figure 3, and Figure 4. The maximum load current can then be estimated as follows:

$$I_{load\ max} = \eta \frac{I_P^2 \times L \times fS_{max}}{2 \times (Vout - Vin)}$$

Where:

I_P = Peak current as described in the previous *peak current control* section

L = Selected inductor value

fS_{max} = Maximum switching frequency as calculated previously

η = Expected converter efficiency. Typically 70% to 85%. (4)

Copyright © 2005–2012, Texas Instruments Incorporated

The maximum load current of the converter is the current at the operation point where the converter starts to enter the continuous conduction mode. Usually the converter should always operate in discontinuous conduction mode.

Last, the selected inductor should have a saturation current that meets the maximum peak current of the converter (as calculated in the *peak current control* section). Use the maximum value for I_{LIM} for this calculation.

Another important inductor parameter is the dc resistance. The lower the dc resistance, the higher the efficiency of the converter. See the Table 1 and the *Typical Applications* section for the inductor selection.

Table 1. Recommended Inductor for Typical LCD Bias Supply (see Figure 15)

DEVICE	INDUCTOR VALUE	COMPONENT SUPPLIER	COMMENTS
TPS61040	10 µH	Sumida CR32-100	High efficiency
	10 µH	Sumida CDRH3D16-100	High efficiency
	10 µH	Murata LQH4C100K04	High efficiency
	4.7 µH	Sumida CDRH3D16-4R7	Small solution size
	4.7 µH	Murata LQH3C4R7M24	Small solution size
TPS61041	10 µH	Murata LQH3C100K24	High efficiency Small solution size

SETTING THE OUTPUT VOLTAGE

The output voltage is calculated as:

$$V_{out} = 1.233\ V \times \left(1 + \frac{R1}{R2}\right) \tag{5}$$

For battery powered applications, a high impedance voltage divider should be used with a typical value for R2 of ≤200 kΩ and a maximum value for R1 of 2.2 MΩ. Smaller values might be used to reduce the noise sensitivity of the feedback pin.

A feed-forward capacitor across the upper feedback resistor R1 is required to provide sufficient overdrive for the error comparator. Without a feed-forward capacitor, or one whose value is too small, the TPS61040/41 shows *double pulses* or a pulse burst instead of single pulses at the switch node (SW), causing higher output voltage ripple. If this higher output voltage ripple is acceptable, the feed-forward capacitor can be left out.

The lower the switching frequency of the converter, the larger the feed-forward capacitor value required. A good starting point is to use a 10-pF feed-forward capacitor. As a first estimation, the required value for the feed-forward capacitor at the operation point can also be calculated using the following formula:

$$C_{FF} = \frac{1}{2 \times \pi \times \frac{fS}{20} \times R1}$$

Where:

R1 = Upper resistor of voltage divider

fS = Switching frequency of the converter at the nominal load current (see the previous section for calculating the switching frequency)

C_{FF} = Choose a value that comes closest to the result of the calculation (6)

The larger the feed-forward capacitor the worse the line regulation of the device. Therefore, when concern for line regulation is paramount, the selected feed-forward capacitor should be as small as possible. See the next section for more information about line and load regulation.

LINE AND LOAD REGULATION

The line regulation of the TPS61040/41 depends on the voltage ripple on the feedback pin. Usually a 50-mV peak-to-peak voltage ripple on the feedback pin FB gives good results.

Some applications require a very tight line regulation and can only allow a small change in output voltage over a certain input voltage range. If no feed-feedforwardforward capacitor C_{FF} is used across the upper resistor of the voltage feedback divider, the device has the best line regulation. Without the feed-forward capacitor the output voltage ripple is higher because the TPS61040/41 shows output voltage bursts instead of single pulses on the switch pin (SW), increasing the output voltage ripple. Increasing the output capacitor value reduces the output voltage ripple.

If a larger output capacitor value is not an option, a feed-forward capacitor C_{FF} can be used as described in the previous section. The use of a feed-forward capacitor increases the amount of voltage ripple present on the feedback pin (FB). The greater the voltage ripple on the feedback pin (≥50 mV), the worse the line regulation. There are two ways to improve the line regulation further:

1. Use a smaller inductor value to increase the switching frequency which will lower the output voltage ripple, as well as the voltage ripple on the feedback pin.
2. Add a small capacitor from the feedback pin (FB) to ground to reduce the voltage ripple on the feedback pin down to 50 mV again. As a starting point, the same capacitor value as selected for the feed-forward capacitor C_{FF} can be used.

OUTPUT CAPACITOR SELECTION

For best output voltage filtering, a low ESR output capacitor is recommended. Ceramic capacitors have a low ESR value but tantalum capacitors can be used as well, depending on the application.

Assuming the converter does not show double pulses or pulse bursts on the switch node (SW), the output voltage ripple can be calculated as:

$$\Delta V_{out} = \frac{I_{out}}{C_{out}} \times \left(\frac{1}{fS(Iout)} - \frac{I_P \times L}{Vout + Vd - Vin} \right) + I_P \times ESR$$

Where:

I_P = Peak current as described in the previous *Peak Current Control* section

L = Selected inductor value

I_{out} = Nominal load current

fS (I_{out}) = Switching frequency at the nominal load current as calculated previously

Vd = Rectifier diode forward voltage (typically 0.3 V)

C_{out} = Selected output capacitor

ESR = Output capacitor ESR value (7)

Refer to Table 2 and *typical applications* section for choosing the output capacitor.

Table 2. Recommended Input and Output Capacitors

DEVICE	CAPACITOR	VOLTAGE RATING	COMPONENT SUPPLIER	COMMENTS
TPS61040/41	4.7 µF/X5R/0805	6.3 V	Tayo Yuden JMK212BY475MG	C_{IN}/C_{OUT}
	10 µF/X5R/0805	6.3 V	Tayo Yuden JMK212BJ106MG	C_{IN}/C_{OUT}
	1.0 µF/X7R/1206	25 V	Tayo Yuden TMK316BJ105KL	C_{OUT}
	1.0 µF/X5R/1206	35 V	Tayo Yuden GMK316BJ105KL	C_{OUT}
	4.7 µF/X5R/1210	25 V	Tayo Yuden TMK325BJ475MG	C_{OUT}

Copyright © 2005–2012, Texas Instruments Incorporated

INPUT CAPACITOR SELECTION

For good input voltage filtering, low ESR ceramic capacitors are recommended. A 4.7-µF ceramic input capacitor is sufficient for most of the applications. For better input voltage filtering this value can be increased. See Table 2 and the *Typical Applications* section for input capacitor recommendations.

DIODE SELECTION

To achieve high efficiency a Schottky diode should be used. The current rating of the diode should meet the peak current rating of the converter as it is calculated in the section peak current control. Use the maximum value for I_{LIM} for this calculation. See Table 3 and the *Typical Applications* section for the selection of the Schottky diode.

Table 3. Recommended Schottky Diode for Typical LCD Bias Supply (see Figure 15)

DEVICE	REVERSE VOLTAGE	COMPONENT SUPPLIER	COMMENTS
TPS61040/41	30 V	ON Semiconductor MBR0530	
	20 V	ON Semiconductor MBR0520	
	20 V	ON Semiconductor MBRM120L	High efficiency
	30 V	Toshiba CRS02	

LAYOUT CONSIDERATIONS

Typical for all switching power supplies, the layout is an important step in the design; especially at high peak currents and switching frequencies. If the layout is not carefully done, the regulator might show noise problems and duty cycle jitter.

The input capacitor should be placed as close as possible to the input pin for good input voltage filtering. The inductor and diode should be placed as close as possible to the switch pin to minimize the noise coupling into other circuits. Since the feedback pin and network is a high impedance circuit the feedback network should be routed away from the inductor. The feedback pin and feedback network should be shielded with a ground plane or trace to minimize noise coupling into this circuit.

Wide traces should be used for connections in bold as shown in Figure 15. A star ground connection or ground plane minimizes ground shifts and noise.

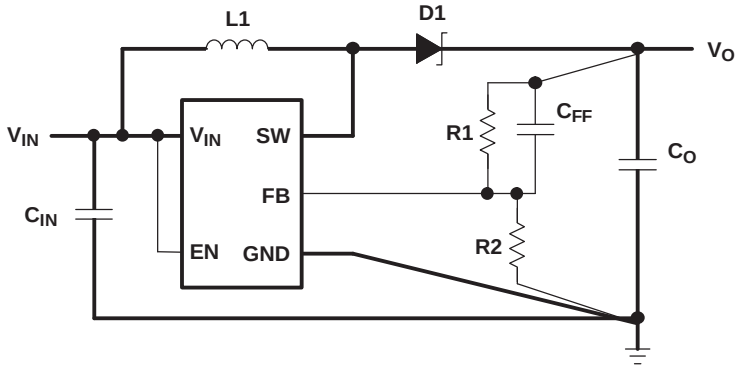

Figure 15. Layout Diagram

Copyright © 2005–2012, Texas Instruments Incorporated

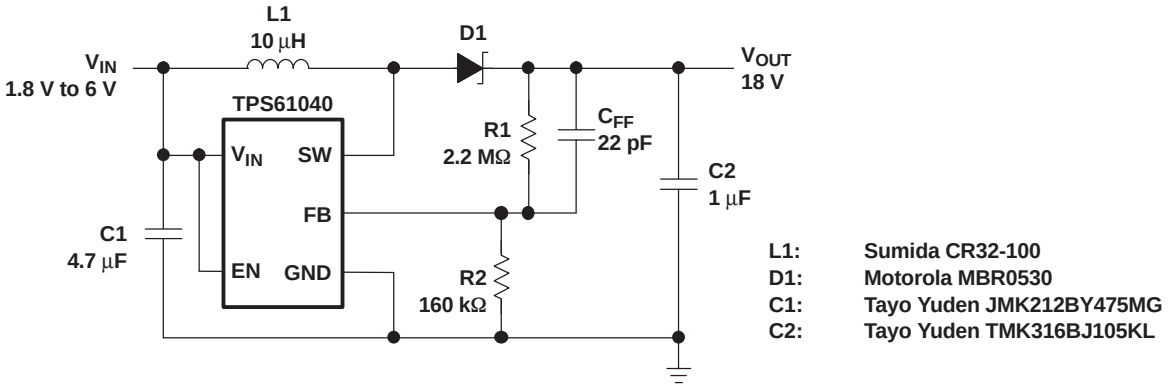

Figure 16. LCD Bias Supply

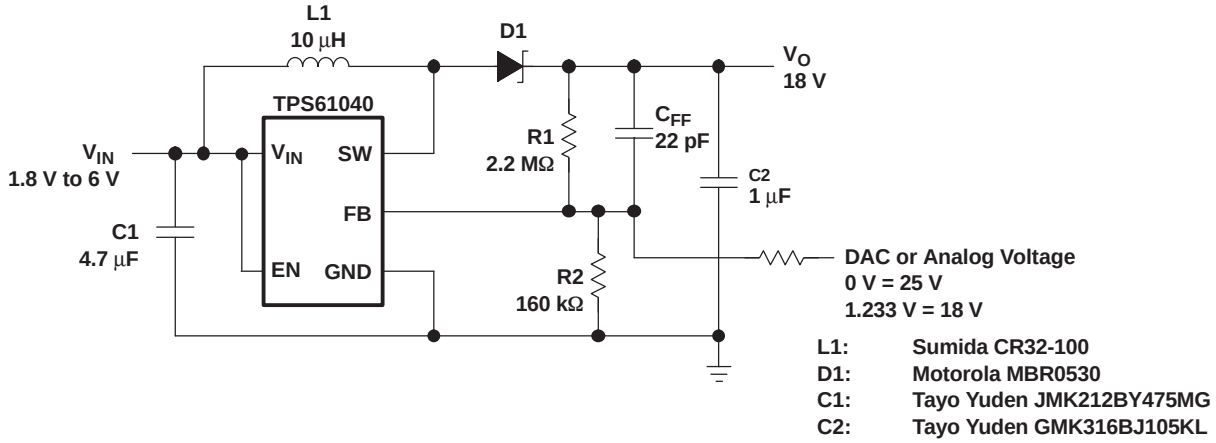

Figure 17. LCD Bias Supply With Adjustable Output Voltage

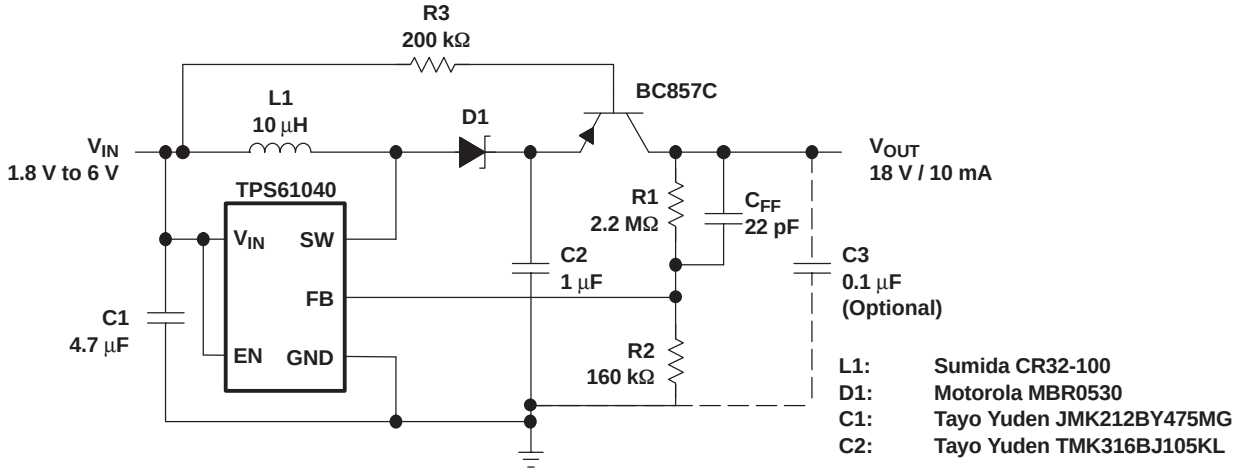

Figure 18. LCD Bias Supply With Load Disconnect

Copyright © 2005–2012, Texas Instruments Incorporated

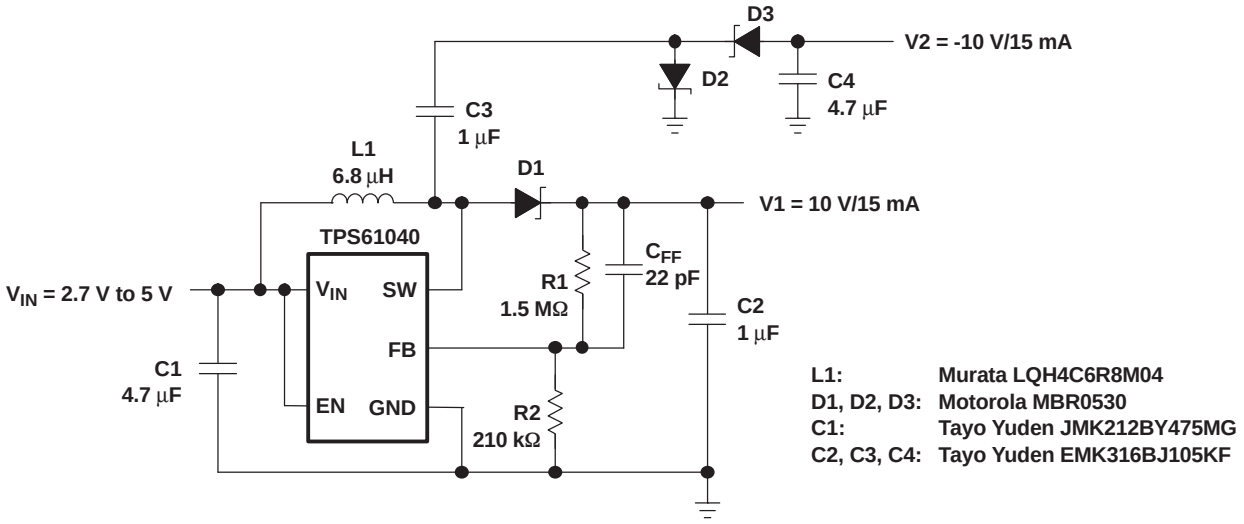

Figure 19. Positive and Negative Output LCD Bias Supply

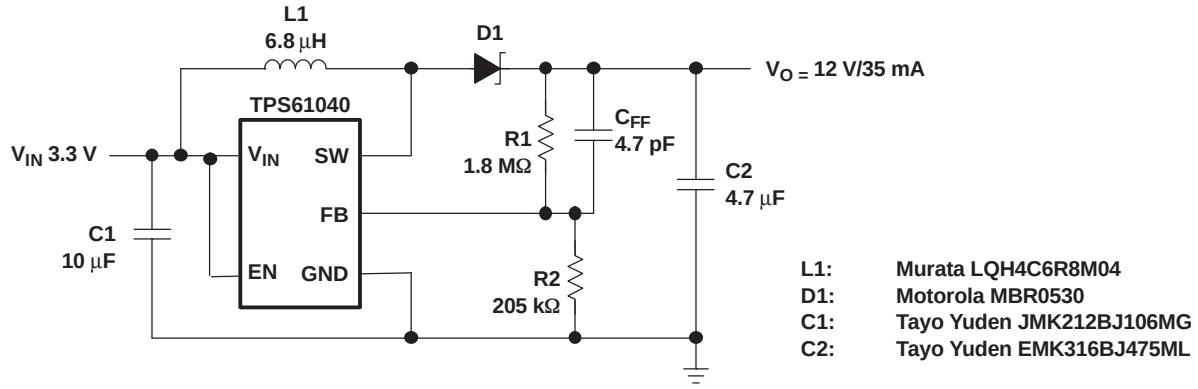

Figure 20. Standard 3.3-V to 12-V Supply

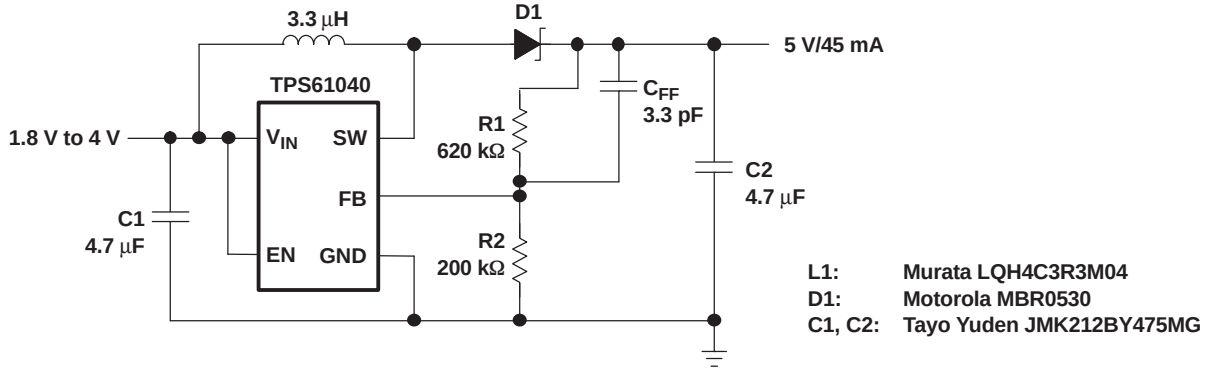

Figure 21. Dual Battery Cell to 5 V/50-mA Conversion Efficiency Aprox. Equals 84% at V_{IN} = 2.4 V to V_O = 5 V/45 mA

Copyright © 2005–2012, Texas Instruments Incorporated

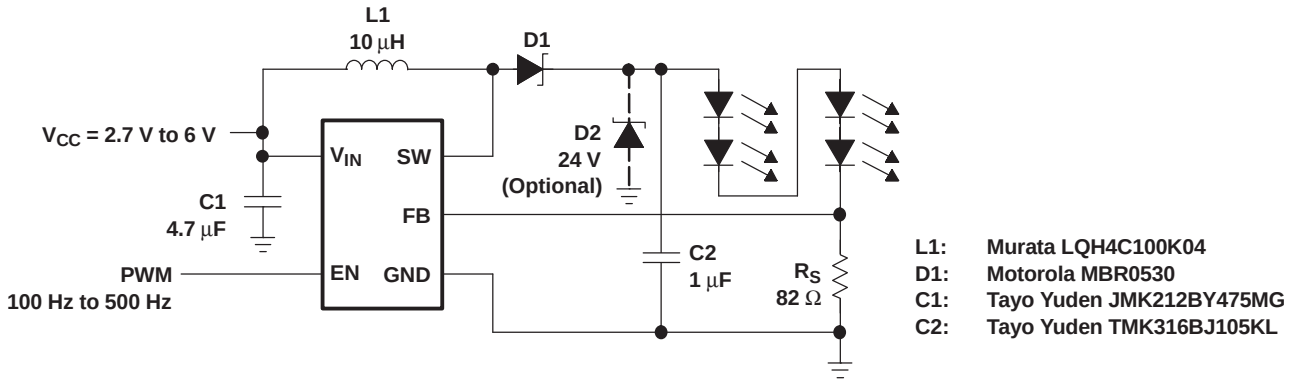

Figure 22. White LED Supply With Adjustable Brightness Control Using a PWM Signal on the Enable Pin Efficiency Aprox. Equals 86% at V_{IN} = 3 V, I_{LED} = 15 mA

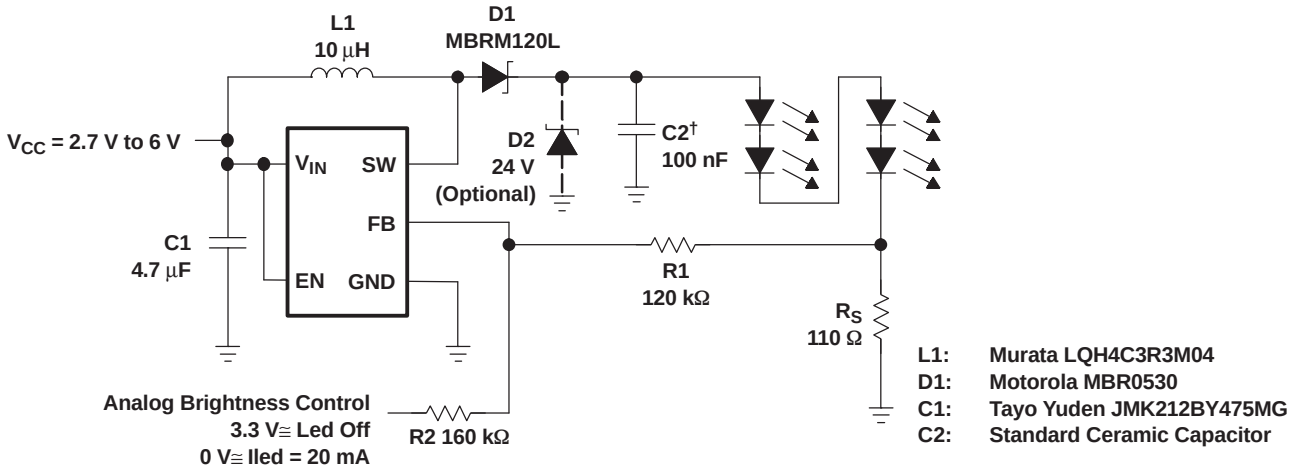

A. A smaller output capacitor value for C2 causes a larger LED ripple.

Figure 23. White LED Supply With Adjustable Brightness Control Using an Analog Signal on the Feedback Pin

Copyright © 2005–2012, Texas Instruments Incorporated

REVISION HISTORY

Changes from Revision B (July 2011) to Revision C	Page
• Added THERMAL SHUTDOWN section between UNDERVOLTAGE LOCKOUT and ABS MAX Table.	4

Copyright © 2005–2012, Texas Instruments Incorporated

PACKAGING INFORMATION

Orderable Device	Status (1)	Package Type	Package Drawing	Pins	Package Qty	Eco Plan (2)	Lead/Ball Finish	MSL Peak Temp (3)	Op Temp (°C)	Top-Side Markings (4)	Samples
TPS61040QDBVRQ1	ACTIVE	SOT-23	DBV	5	3000	Green (RoHS & no Sb/Br)	CU NIPDAU	Level-1-260C-UNLIM	-40 to 125	PHOQ	Samples
TPS61041QDBVRQ1	ACTIVE	SOT-23	DBV	5	3000	Green (RoHS & no Sb/Br)	CU NIPDAU	Level-1-260C-UNLIM	-40 to 125	PHPQ	Samples

(1) The marketing status values are defined as follows:
ACTIVE: Product device recommended for new designs.
LIFEBUY: TI has announced that the device will be discontinued, and a lifetime-buy period is in effect.
NRND: Not recommended for new designs. Device is in production to support existing customers, but TI does not recommend using this part in a new design.
PREVIEW: Device has been announced but is not in production. Samples may or may not be available.
OBSOLETE: TI has discontinued the production of the device.

(2) Eco Plan - The planned eco-friendly classification: Pb-Free (RoHS), Pb-Free (RoHS Exempt), or Green (RoHS & no Sb/Br) - please check http://www.ti.com/productcontent for the latest availability information and additional product content details.
TBD: The Pb-Free/Green conversion plan has not been defined.
Pb-Free (RoHS): TI's terms "Lead-Free" or "Pb-Free" mean semiconductor products that are compatible with the current RoHS requirements for all 6 substances, including the requirement that lead not exceed 0.1% by weight in homogeneous materials. Where designed to be soldered at high temperatures, TI Pb-Free products are suitable for use in specified lead-free processes.
Pb-Free (RoHS Exempt): This component has a RoHS exemption for either 1) lead-based flip-chip solder bumps used between the die and package, or 2) lead-based die adhesive used between the die and leadframe. The component is otherwise considered Pb-Free (RoHS compatible) as defined above.
Green (RoHS & no Sb/Br): TI defines "Green" to mean Pb-Free (RoHS compatible), and free of Bromine (Br) and Antimony (Sb) based flame retardants (Br or Sb do not exceed 0.1% by weight in homogeneous material)

(3) MSL, Peak Temp. -- The Moisture Sensitivity Level rating according to the JEDEC industry standard classifications, and peak solder temperature.

(4) Multiple Top-Side Markings will be inside parentheses. Only one Top-Side Marking contained in parentheses and separated by a "~" will appear on a device. If a line is indented then it is a continuation of the previous line and the two combined represent the entire Top-Side Marking for that device.

Important Information and Disclaimer: The information provided on this page represents TI's knowledge and belief as of the date that it is provided. TI bases its knowledge and belief on information provided by third parties, and makes no representation or warranty as to the accuracy of such information. Efforts are underway to better integrate information from third parties. TI has taken and continues to take reasonable steps to provide representative and accurate information but may not have conducted destructive testing or chemical analysis on incoming materials and chemicals. TI and TI suppliers consider certain information to be proprietary, and thus CAS numbers and other limited information may not be available for release.

In no event shall TI's liability arising out of such information exceed the total purchase price of the TI part(s) at issue in this document sold by TI to Customer on an annual basis.

OTHER QUALIFIED VERSIONS OF TPS61040-Q1, TPS61041-Q1 :

- Catalog: TPS61040, TPS61041

NOTE: Qualified Version Definitions:

- Catalog - TI's standard catalog product

TAPE AND REEL INFORMATION

REEL DIMENSIONS

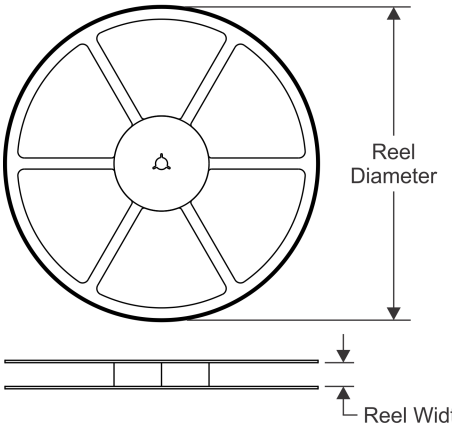

TAPE DIMENSIONS

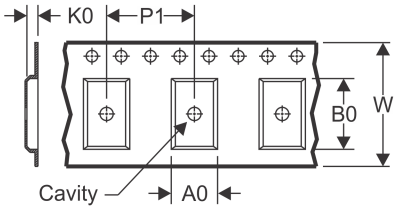

A0	Dimension designed to accommodate the component width
B0	Dimension designed to accommodate the component length
K0	Dimension designed to accommodate the component thickness
W	Overall width of the carrier tape
P1	Pitch between successive cavity centers

QUADRANT ASSIGNMENTS FOR PIN 1 ORIENTATION IN TAPE

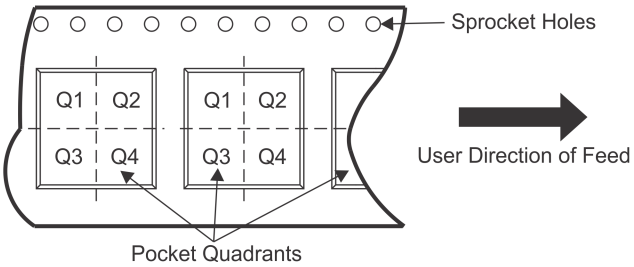

*All dimensions are nominal

Device	Package Type	Package Drawing	Pins	SPQ	Reel Diameter (mm)	Reel Width W1 (mm)	A0 (mm)	B0 (mm)	K0 (mm)	P1 (mm)	W (mm)	Pin1 Quadrant
TPS61040QDBVRQ1	SOT-23	DBV	5	3000	180.0	9.0	3.15	3.2	1.4	4.0	8.0	Q3
TPS61041QDBVRQ1	SOT-23	DBV	5	3000	180.0	9.0	3.15	3.2	1.4	4.0	8.0	Q3

TAPE AND REEL BOX DIMENSIONS

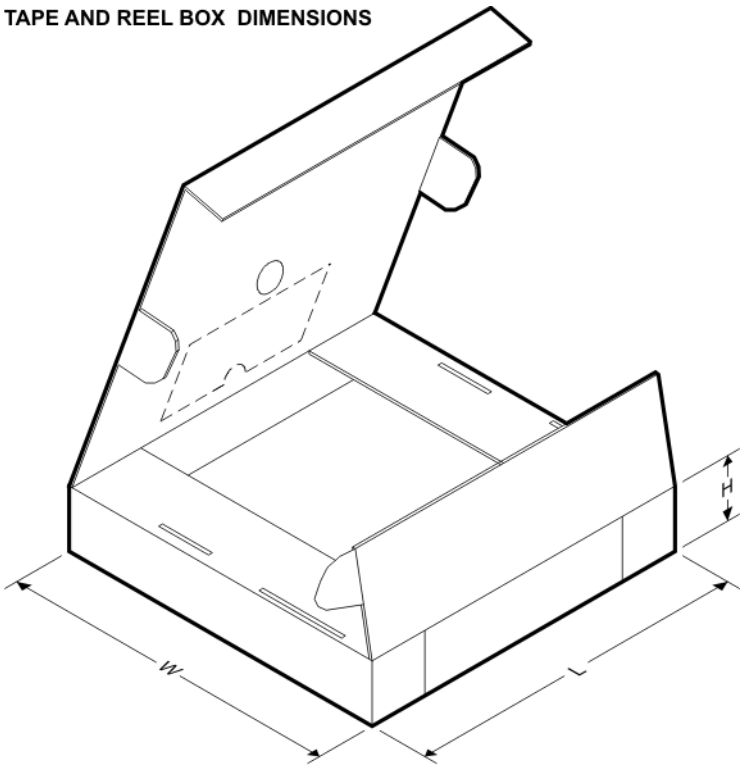

*All dimensions are nominal

Device	Package Type	Package Drawing	Pins	SPQ	Length (mm)	Width (mm)	Height (mm)
TPS61040QDBVRQ1	SOT-23	DBV	5	3000	182.0	182.0	20.0
TPS61041QDBVRQ1	SOT-23	DBV	5	3000	182.0	182.0	20.0

DBV (R–PDSO–G5) PLASTIC SMALL–OUTLINE PACKAGE

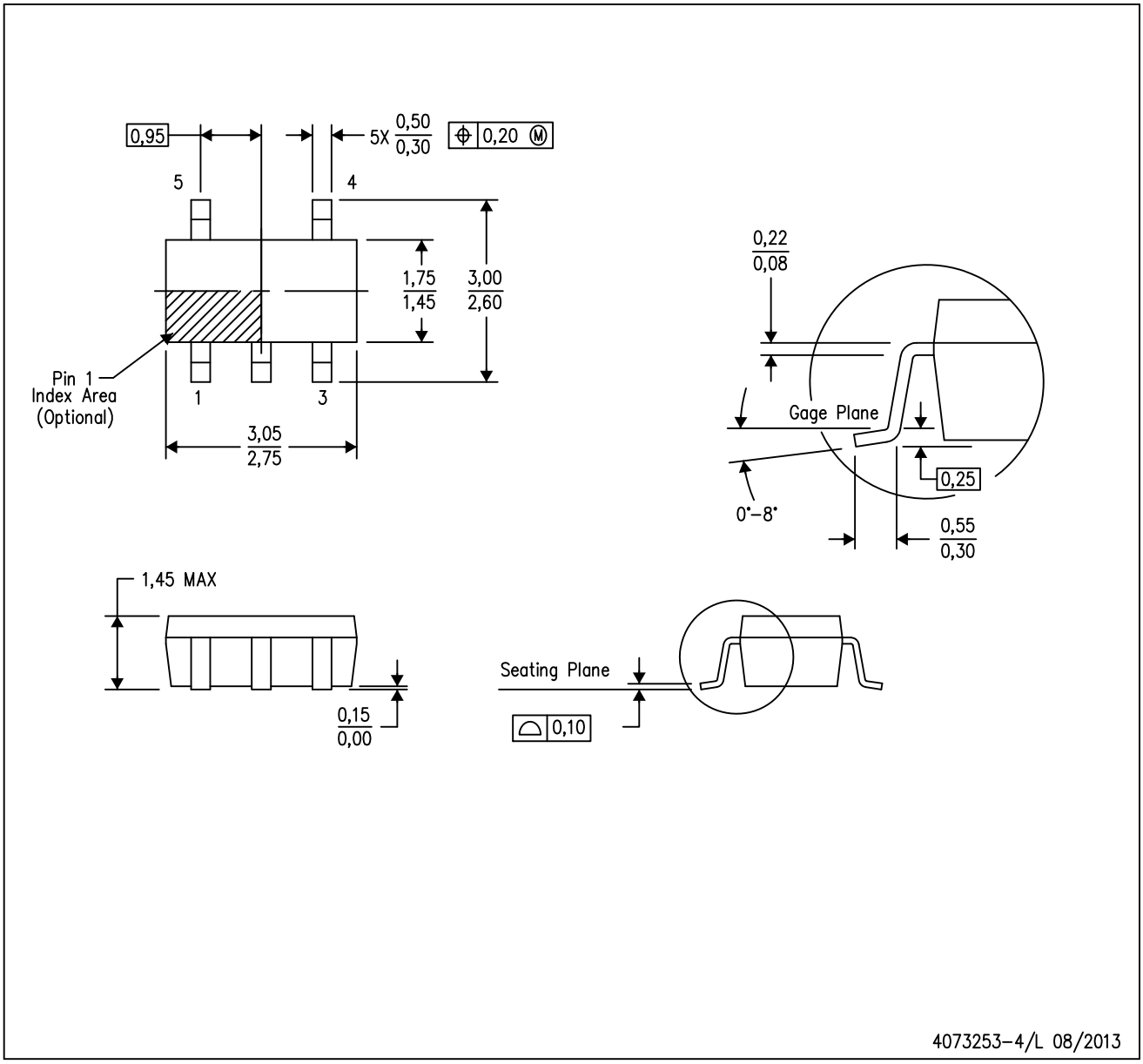

NOTES:
A. All linear dimensions are in millimeters.
B. This drawing is subject to change without notice.
C. Body dimensions do not include mold flash or protrusion. Mold flash and protrusion shall not exceed 0.15 per side.
D. Falls within JEDEC MO–178 Variation AA.

DBV (R-PDSO-G5) PLASTIC SMALL OUTLINE

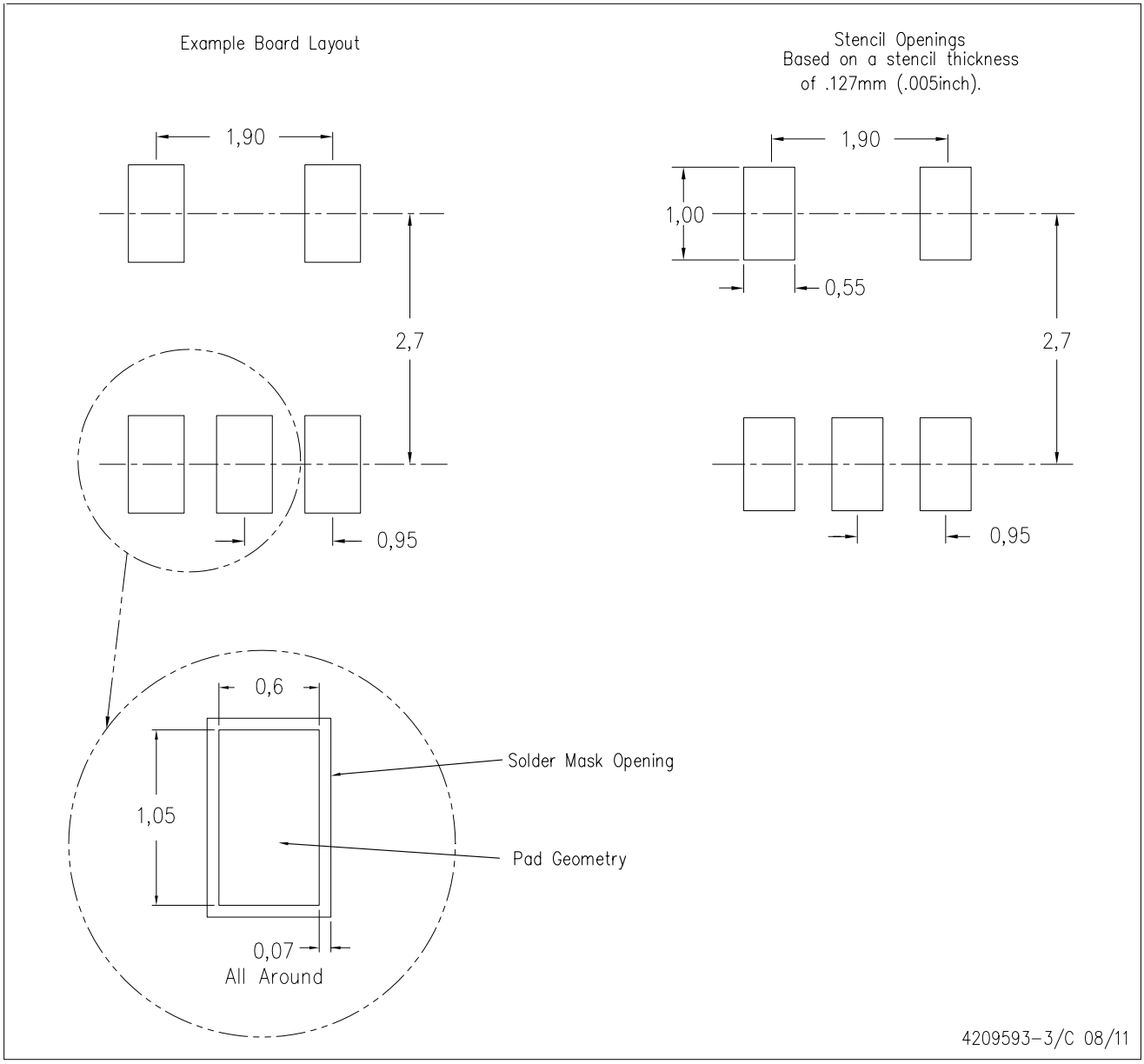

NOTES:
A. All linear dimensions are in millimeters.
B. This drawing is subject to change without notice.
C. Customers should place a note on the circuit board fabrication drawing not to alter the center solder mask defined pad.
D. Publication IPC-7351 is recommended for alternate designs.
E. Laser cutting apertures with trapezoidal walls and also rounding corners will offer better paste release. Customers should contact their board assembly site for stencil design recommendations. Example stencil design based on a 50% volumetric metal load solder paste. Refer to IPC-7525 for other stencil recommendations.

IMPORTANT NOTICE

Texas Instruments Incorporated and its subsidiaries (TI) reserve the right to make corrections, enhancements, improvements and other changes to its semiconductor products and services per JESD46, latest issue, and to discontinue any product or service per JESD48, latest issue. Buyers should obtain the latest relevant information before placing orders and should verify that such information is current and complete. All semiconductor products (also referred to herein as “components”) are sold subject to TI’s terms and conditions of sale supplied at the time of order acknowledgment.

TI warrants performance of its components to the specifications applicable at the time of sale, in accordance with the warranty in TI’s terms and conditions of sale of semiconductor products. Testing and other quality control techniques are used to the extent TI deems necessary to support this warranty. Except where mandated by applicable law, testing of all parameters of each component is not necessarily performed.

TI assumes no liability for applications assistance or the design of Buyers’ products. Buyers are responsible for their products and applications using TI components. To minimize the risks associated with Buyers’ products and applications, Buyers should provide adequate design and operating safeguards.

TI does not warrant or represent that any license, either express or implied, is granted under any patent right, copyright, mask work right, or other intellectual property right relating to any combination, machine, or process in which TI components or services are used. Information published by TI regarding third-party products or services does not constitute a license to use such products or services or a warranty or endorsement thereof. Use of such information may require a license from a third party under the patents or other intellectual property of the third party, or a license from TI under the patents or other intellectual property of TI.

Reproduction of significant portions of TI information in TI data books or data sheets is permissible only if reproduction is without alteration and is accompanied by all associated warranties, conditions, limitations, and notices. TI is not responsible or liable for such altered documentation. Information of third parties may be subject to additional restrictions.

Resale of TI components or services with statements different from or beyond the parameters stated by TI for that component or service voids all express and any implied warranties for the associated TI component or service and is an unfair and deceptive business practice. TI is not responsible or liable for any such statements.

Buyer acknowledges and agrees that it is solely responsible for compliance with all legal, regulatory and safety-related requirements concerning its products, and any use of TI components in its applications, notwithstanding any applications-related information or support that may be provided by TI. Buyer represents and agrees that it has all the necessary expertise to create and implement safeguards which anticipate dangerous consequences of failures, monitor failures and their consequences, lessen the likelihood of failures that might cause harm and take appropriate remedial actions. Buyer will fully indemnify TI and its representatives against any damages arising out of the use of any TI components in safety-critical applications.

In some cases, TI components may be promoted specifically to facilitate safety-related applications. With such components, TI’s goal is to help enable customers to design and create their own end-product solutions that meet applicable functional safety standards and requirements. Nonetheless, such components are subject to these terms.

No TI components are authorized for use in FDA Class III (or similar life-critical medical equipment) unless authorized officers of the parties have executed a special agreement specifically governing such use.

Only those TI components which TI has specifically designated as military grade or “enhanced plastic” are designed and intended for use in military/aerospace applications or environments. Buyer acknowledges and agrees that any military or aerospace use of TI components which have ***not*** been so designated is solely at the Buyer's risk, and that Buyer is solely responsible for compliance with all legal and regulatory requirements in connection with such use.

TI has specifically designated certain components as meeting ISO/TS16949 requirements, mainly for automotive use. In any case of use of non-designated products, TI will not be responsible for any failure to meet ISO/TS16949.

Products		**Applications**	
Audio	www.ti.com/audio	Automotive and Transportation	www.ti.com/automotive
Amplifiers	amplifier.ti.com	Communications and Telecom	www.ti.com/communications
Data Converters	dataconverter.ti.com	Computers and Peripherals	www.ti.com/computers
DLP® Products	www.dlp.com	Consumer Electronics	www.ti.com/consumer-apps
DSP	dsp.ti.com	Energy and Lighting	www.ti.com/energy
Clocks and Timers	www.ti.com/clocks	Industrial	www.ti.com/industrial
Interface	interface.ti.com	Medical	www.ti.com/medical
Logic	logic.ti.com	Security	www.ti.com/security
Power Mgmt	power.ti.com	Space, Avionics and Defense	www.ti.com/space-avionics-defense
Microcontrollers	microcontroller.ti.com	Video and Imaging	www.ti.com/video
RFID	www.ti-rfid.com		
OMAP Applications Processors	www.ti.com/omap	**TI E2E Community**	e2e.ti.com
Wireless Connectivity	www.ti.com/wirelessconnectivity		

Mailing Address: Texas Instruments, Post Office Box 655303, Dallas, Texas 75265
Copyright © 2013, Texas Instruments Incorporated

AMEYA360
Components Supply Platform

Authorized Distribution Brand :

Website :

Welcome to visit www.ameya360.com

Contact Us :

- ## Address :

401 Building No.5, JiuGe Business Center, Lane 2301, Yishan Rd
Minhang District, Shanghai , China

- ## Sales :

Direct +86 (21) 6401-6692

Email amall@ameya360.com

QQ 800077892

Skype ameyasales1 ameyasales2

- ## Customer Service :

Email service@ameya360.com

- ## Partnership :

Tel +86 (21) 64016692-8333

Email mkt@ameya360.com