CP2102/9

SINGLE-CHIP USB TO UART BRIDGE

Single-Chip USB to UART Data Transfer

- Integrated USB transceiver; no external resistors required
- Integrated clock; no external crystal required
- Internal 1024-byte programmable ROM for vendor ID, product ID, serial number, power descriptor, release number, and product description strings
  - EEPROM (CP2102)
  - EPROM (One-time programmable) (CP2109)
- On-chip power-on reset circuit
- On-chip voltage regulator
  - 3.3 V output (CP2102)
  - 3.45 V output (CP2109)
- 100% pin and software compatible with CP2101

USB Function Controller

- USB Specification 2.0 compliant; full-speed (12 Mbps)
- USB suspend states supported via SUSPEND pins

Asynchronous Serial Data BUS (UART)

- All handshaking and modem interface signals
- Data formats supported:
  - Data bits: 5, 6, 7, and 8
  - Stop bits: 1, 1.5, and 2
  - Parity: odd, even, mark, space, no parity
- Baud rates: 300 bps to 1 Mbps
- 576 Byte receive buffer; 640 byte transmit buffer
- Hardware or X-On/X-Off handshaking supported
- Event character support
- Line break transmission

Virtual COM Port Device Drivers

- Works with existing COM port PC Applications
- Royalty-free distribution license
- Windows 8/7/Vista/Server 2003/XP/2000
- Mac OS-X/OS-9
- Linux

USBXpress™ Direct Driver Support

- Royalty-Free Distribution License
- Windows 7/Vista/XP/Server 2003/2000
- Windows CE

Example Applications

- Upgrade of RS-232 legacy devices to USB
- Cellular phone USB interface cable
- USB interface cable
- USB to RS-232 serial adapter

Supply Voltage

- Self-powered: 3.0 to 3.6 V
- USB bus powered: 4.0 to 5.25 V

Package

- RoHS-compliant 28-pin QFN (5x5 mm)

Ordering Part Numbers

- CP2102-GM
- CP2109-A01-GM

Temperature Range: –40 to +85 °C

Note: For newer designs, the CP2102N devices offer compatible footprints and are recommended for use instead of the CP2102/9. See the Silicon Labs website (www.silabs.com/usbxpress) for more information.

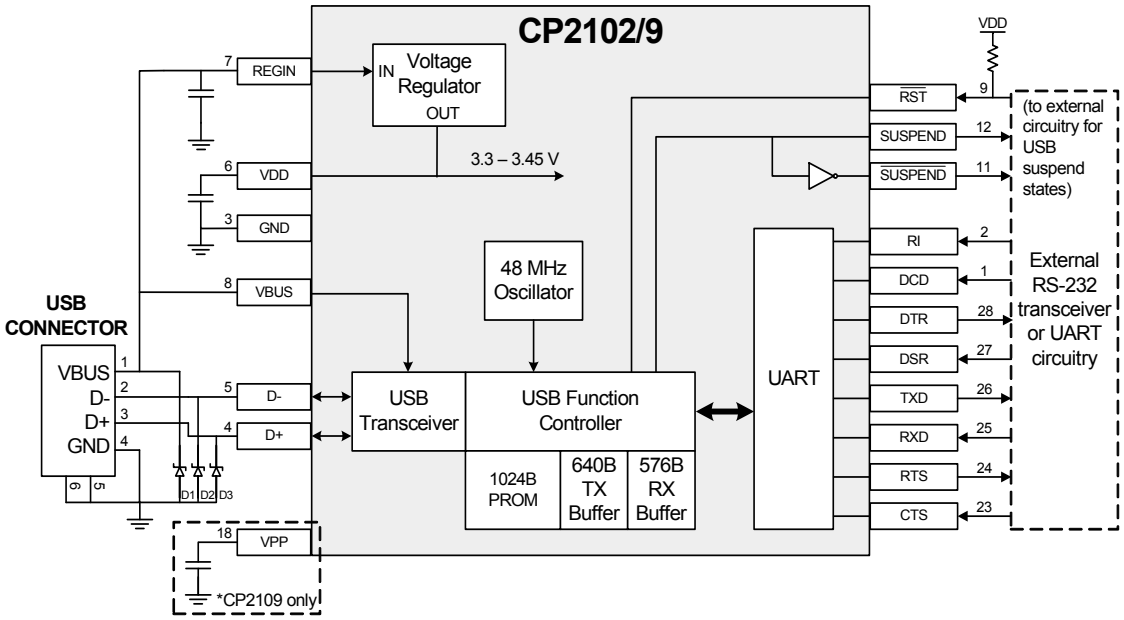

Figure 1. Example System Diagram

Copyright © 2016 by Silicon Laboratories

TABLE OF CONTENTS

Section **Page**

1. System Overview 3
2. Ordering Information 4
3. Electrical Specifications 5
4. Pinout and Package Definitions 10
5. QFN-28 Package Specifications 12
6. USB Function Controller and Transceiver 14
7. Asynchronous Serial Data Bus (UART) Interface 15
8. Internal Programmable ROM 16
9. CP2102/9 Device Drivers 17
9.1. Virtual COM Port Drivers 17
9.2. USBXpress Drivers 17
9.3. Driver Customization 17
9.4. Driver Certification 17
10. Voltage Regulator 18
11. Porting Considerations from CP2102 to CP2109 21
11.1. Pin-Compatibility 21
11.2. Distinguishing Factors 21
11.3. Differences in Electrical Specifications 21
12. Relevant Application Notes 23
Document Change List 24
Contact Information 26

1. System Overview

The CP2102/9 is a highly-integrated USB-to-UART Bridge Controller providing a simple solution for updating RS-232 designs to USB using a minimum of components and PCB space. The CP2102/9 includes a USB 2.0 full-speed function controller, USB transceiver, oscillator, EEPROM or EPROM, and asynchronous serial data bus (UART) with full modem control signals in a compact 5 x 5 mm QFN-28 package. No other external USB components are required.

The on-chip programmable ROM may be used to customize the USB Vendor ID, Product ID, Product Description String, Power Descriptor, Device Release Number, and Device Serial Number as desired for OEM applications. The programmable ROM is programmed on-board via the USB, allowing the programming step to be easily integrated into the product manufacturing and testing process.

Royalty-free Virtual COM Port (VCP) device drivers provided by Silicon Laboratories allow a CP2102/9-based product to appear as a COM port to PC applications. The CP2102/9 UART interface implements all RS-232 signals, including control and handshaking signals, so existing system firmware does not need to be modified. In many existing RS-232 designs, all that is required to update the design from RS-232 to USB is to replace the RS-232 level-translator with the CP2102/9. Direct access driver support is available through the Silicon Laboratories USBXpress driver set.

An evaluation kit for the CP2102 (Part Number: CP2102EK) is available. The kit includes a CP2102-based USB-to-UART/RS-232 evaluation board, a complete set of VCP device drivers, USB and RS-232 cables, and full documentation. Contact a Silicon Labs sales representative or go to www.silabs.com to order the CP2102 Evaluation Kit. The CP2102 Evaluation Kit serves as an evaluation kit for both the CP2102 and CP2109.

2. Ordering Information

Table 1. Product Selection Guide

Ordering Part Number	Internal Programmable ROM (Byte)	EEPROM	EPROM	Calibrated Internal 48 MHz Oscillator	Supply Voltage Regulator	Lead-free (RoHS-Compliant)	Package
CP2102-GM*	1024	Y	N	Y	Y	Y	QFN28
CP2109-A01-GM*	1024	N	Y	Y	Y	Y	QFN28
***Note:** Pin compatible with the CP2101-GM.							

3. Electrical Specifications

Table 2. Absolute Maximum Ratings

Parameter	Symbol	Test Condition	Min	Typ	Max	Unit
Ambient Temperature under Bias	T_{BIAS}		–55	—	125	°C
Storage Temperature	T_{STG}		–65	—	150	°C
Voltage on V_{DD} with respect to GND	V_{DD}		–0.3	—	4.2	V
Maximum Total Current through V_{DD} and GND			—	—	500	mA
Maximum Output Current sunk by $\overline{RST}$ or any I/O pin			—	—	100	mA
CP2102						
Voltage on any I/O Pin, VBUS, or $\overline{RST}$ with respect to GND			–0.3	—	5.8	V
CP2109						
Voltage on any I/O Pin, VBUS, or $\overline{RST}$ with respect to GND		$V_{DD} \geq 3.0$ V V_{DD} not powered	–0.3 –0.3	— —	5.8 V_{DD} + 3.6	V

Note: Stresses above those listed may cause permanent device damage. This is a stress rating only, and functional operation of the devices at or exceeding the conditions in the operation listings of this specification is not implied. Exposure to maximum rating conditions for extended periods may affect device reliability.

Table 3. Recommended Operating Conditions

V_{DD} = 3.0 to 3.6 V, –40 to +85 °C unless otherwise specified

Parameter	Symbol	Test Condition	Min	Typ	Max	Unit
Supply Voltage	V_{DD}		3.0	3.3	3.6	V
Supply Current - USB Pull-up[1]	I_{PU}		—	200	230	µA
Specified Operating Temperature Range	T_A		–40	—	+85	°C
Thermal Resistance[2]	θ_{JA}		—	32	—	°C/W
CP2102						
Supply Current—Normal[3]	I_{REGIN}	Normal Operation; V_{REG} Enabled	—	20	26	mA
Supply Current—Suspended[3]	I_{REGIN}	Bus Powered; V_{REG} Enabled	—	80	100	µA
CP2109						
Supply Current—Normal[3]	I_{REGIN}	Normal Operation; V_{REG} Enabled	—	17	23	mA
Supply Current—Suspended[3]	I_{REGIN}	Bus Powered; V_{REG} Enabled	—	90	230	µA

Notes:

1. The USB Pull-up supply current values are calculated values based on USB specifications. USB Pull-up supply current is current flowing from V_{DD} to GND through USB pull-down/pull-up resistors on D+ and D-.
2. Thermal resistance assumes a multi-layer PCB with any exposed pad soldered to a PCB pad.
3. USB Pull-up current should be added for total supply current. Normal and suspended supply current is current flowing into V_{REGIN}. Normal and suspended supply current is guaranteed by characterization.

Table 4. UART and Suspend I/O DC Electrical Characteristics

V_{DD} = 3.0 to 3.6 V, –40 to +85 °C unless otherwise specified

Parameter	Symbol	Test Condition	Min	Typ	Max	Unit
Baud Rate			—	—	921600	bps
Input Leakage Current	I_L		—	25	50	µA
CP2102						
Output High Voltage	V_{OH}	I_{OH} = –10 µA I_{OH} = –3 mA I_{OH} = –10 mA	V_{DD} – 0.1 V_{DD} – 0.7 —	— — V_{DD} – 0.8	— — —	V
Output Low Voltage	V_{OL}	I_{OL} = 10 µA I_{OL} = 8.5 mA I_{OL} = 25 mA	— — —	— — 1.0	0.1 0.6 —	V
Input High Voltage	V_{IH}		2.0	—	—	V
Input Low Voltage	V_{IL}		—	—	0.8	V
CP2109						
Output High Voltage	V_{OH}	I_{OH} = –10 µA I_{OH} = –3 mA I_{OH} = –10 mA	V_{DD} – 0.1 V_{DD} – 0.2 —	— — V_{DD} – 0.4	— — —	V
Output Low Voltage	V_{OL}	I_{OL} = 10 µA I_{OL} = 8.5 mA I_{OL} = 25 mA	— — —	— — 0.6	0.1 0.4 —	V
Input High Voltage	V_{IH}		0.7 x V_{DD}	—	—	V
Input Low Voltage	V_{IL}		—	—	0.6	V

Table 5. Reset Electrical Characteristics

–40 to +85 °C unless otherwise specified

Parameter	Symbol	Test Condition	Min	Typ	Max	Unit
V_{DD} Ramp Time	t_{RMP}	Time to V_{DD} ≥ 2.7 V	—	—	1	ms
$\overline{RST}$ Low Time to Generate a System Reset	t_{RSTL}		15	—	—	µs
CP2102						
$\overline{RST}$ Input High Voltage	$V_{IHRESET}$		0.7 x V_{DD}	—	—	V
$\overline{RST}$ Input Low Voltage	$V_{ILRESET}$		—	—	0.25 x V_{DD}	V
CP2109						
$\overline{RST}$ Input High Voltage	$V_{IHRESET}$		0.75 x V_{DD}	—	—	V
$\overline{RST}$ Input Low Voltage	$V_{ILRESET}$		—	—	0.6	V

Table 6. Voltage Regulator Electrical Specifications

–40 to +85 °C unless otherwise specified.

Parameter	Symbol	Test Condition	Min	Typ	Max	Unit
CP2102						
Input Voltage Range	V_{REGIN}		4.0	—	5.25	V
Output Voltage	V_{DDOUT}	Output Current = 1 to 100 mA*	3.0	3.3	3.6	V
VBUS Detection Input Threshold	V_{VBUSTH}		1.0	1.8	2.9	V
Bias Current			—	90	—	µA
CP2109						
Input Voltage Range	V_{REGIN}		3.0	—	5.25	V
Output Voltage	V_{DDOUT}	Output Current = 1 to 100 mA*	3.3	3.45	3.6	V
VBUS Detection Input Threshold	V_{VBUSTH}		2.5	—	—	V
Bias Current			—	83	99	µA
***Note:** The maximum regulator supply current is 100 mA.						

Table 7. USB Transceiver Electrical Specifications

V_{DD} = 3.0 V to 3.6 V, –40 to +85 °C unless otherwise specified.

Parameter	Symbol	Test Condition	Min	Typ	Max	Unit
Transmitter						
Output High Voltage	V_{OH}		2.8	—	—	V
Output Low Voltage	V_{OL}		—	—	0.8	V
Output Crossover Point	V_{CRS}		1.3	—	2.0	V
Output Impedance (CP2102)	Z_{DRV}	Driving High Driving Low	— —	38 38	— —	Ω
Output Impedance (CP2109)	Z_{DRV}	Driving High Driving Low	— —	36 36	— —	Ω
Pull-up Resistance	R_{PU}	Full Speed (D+ Pull-up) Low Speed (D- Pull-up)	1.425	1.5	1.575	kΩ
Output Rise Time	T_R	Low Speed Full Speed	75 4	— —	300 20	ns
Output Fall Time	T_F	Low Speed Full Speed	75 4	— —	300 20	ns
Receiver						
Differential Input Sensitivity	V_{DI}	| (D+) - (D-) |	0.2	—	—	V
Differential Input Common Mode Range	V_{CM}		0.8	—	2.5	V
Input Leakage Current	I_L	Pullups Disabled	—	< 1.0	—	µA
***Note:** Refer to the USB Specification for timing diagrams and symbol definitions.						

Table 8. EPROM Electrical Characteristics

Parameter	Test Condition	Min	Typ	Max	Unit
CP2109					
Voltage on V_{PP} with respect to GND during a ROM programming operation	$V_{DD} \geq 3.3$ V	5.75	—	V_{DD} + 3.6	V
Capacitor on V_{PP} for In-system Programming		—	4.7	—	µF

4. Pinout and Package Definitions

Table 9. CP2102/9 Pin Definitions

Name	Pin #	Type	Description
V_{DD}	6	Power In Power Out	3.0–3.6 V Power Supply Voltage Input. 3.3 V Voltage Regulator Output. See "10. Voltage Regulator" on page 18.
GND	3		Ground
RST	9	D I/O	Device Reset. Open-drain output of internal POR or V_{DD} monitor. An external source can initiate a system reset by driving this pin low for at least 15 µs.
REGIN	7	Power In	5 V Regulator Input. This pin is the input to the on-chip voltage regulator.
VBUS	8	D In	VBUS Sense Input. This pin should be connected to the VBUS signal of a USB network. A 5 V signal on this pin indicates a USB network connection.
NC[1] / V_{PP}[2]	18	 A Power	This pin should be left unconnected or tied to V_{DD}. This pin is unused on the CP2102 and may be connected to the Vpp programming capacitor to maintain board compatibility with the CP2109. V_{PP} Programming Supply Voltage
D+	4	D I/O	USB D+
D–	5	D I/O	USB D–
TXD	26	D Out	Asynchronous data output (UART Transmit)
RXD	25	D In	Asynchronous data input (UART Receive)
CTS	23[3]	D In	Clear To Send control input (active low)
RTS	24[3]	D Out	Ready to Send control output (active low)
DSR	27[3]	D in	Data Set Ready control input (active low)
DTR	28[3]	D Out	Data Terminal Ready control output (active low)
DCD	1[3]	D In	Data Carrier Detect control input (active low)
RI	2[3]	D In	Ring Indicator control input (active low)
SUSPEND	12[3]	D Out	This pin is driven high when the CP2102/9 enters the USB suspend state.
$\overline{\text{SUSPEND}}$	11[3]	D Out	This pin is driven low when the CP2102/9 enters the USB suspend state.
NC	10, 13–22		These pins should be left unconnected or tied to V_{DD}.

Notes:
1. For CP2102, pin is no connect (NC).
2. For CP2109, pin is V_{PP}. V_{PP} can be left unconnected when not used for in-application programming.
3. Pins can be left unconnected when not used.

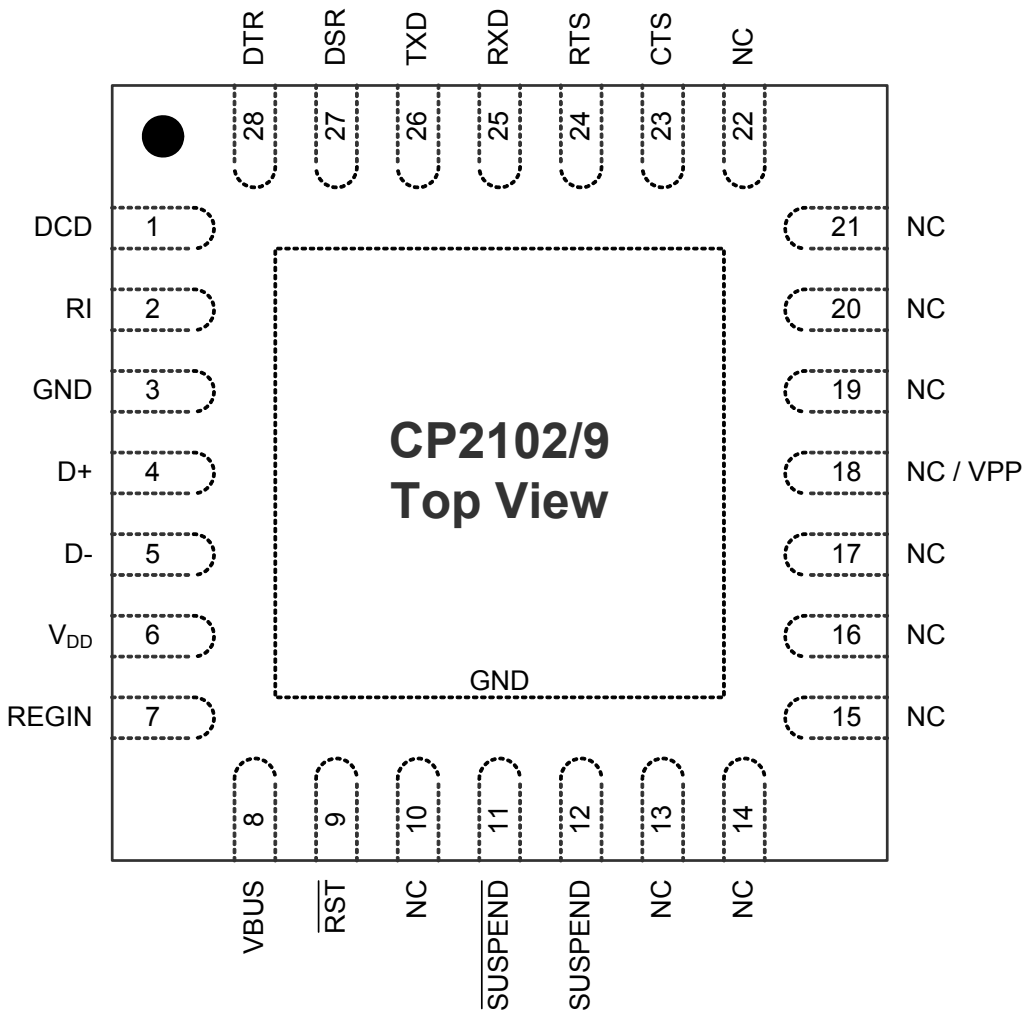

Figure 2. QFN-28 Pinout Diagram (Top View)

5. QFN-28 Package Specifications

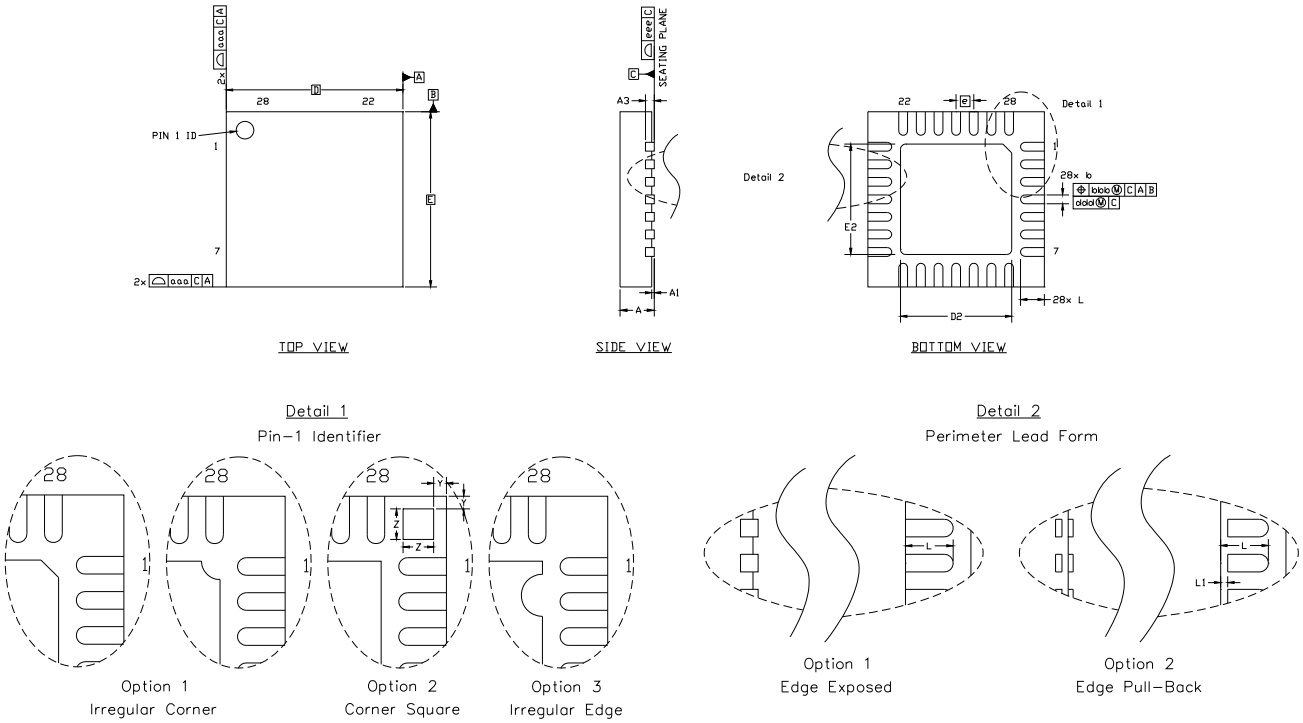

Figure 3. QFN-28 Package Drawing

Table 10. QFN-28 Package Dimensions

Dimension	Min	Typ	Max
A	0.80	0.90	1.00
A1	0.00	0.02	0.05
A3		0.25 REF	
b	0.18	0.23	0.30
D		5.00 BSC.	
D2	2.90	3.15	3.35
e		0.50 BSC.	
E		5.00 BSC.	
E2	2.90	3.15	3.35

Dimension	Min	Typ	Max
L	0.35	0.55	0.65
L1	0.00	—	0.15
aaa		0.15	
bbb		0.10	
ddd		0.05	
eee		0.08	
Z		0.44	
Y		0.18	

Notes:

1. All dimensions shown are in millimeters (mm) unless otherwise noted.
2. Dimensioning and Tolerancing per ANSI Y14.5M-1994.
3. This drawing conforms to the JEDEC Solid State Outline MO-220, variation VHHD except for custom features D2, E2, Z, Y, and L, which are toleranced per supplier designation.
4. Recommended card reflow profile is per the JEDEC/IPC J-STD-020 specification for Small Body Components.

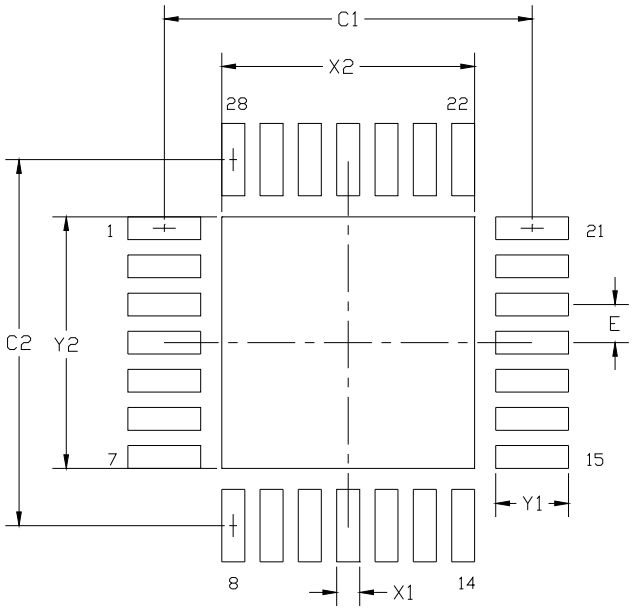

Figure 4. QFN-28 Recommended PCB Land Pattern

Table 11. QFN-28 PCB Land Pattern Dimensions

Dimension	Min	Max
C1	4.80	
C2	4.80	
E	0.50	
X1	0.20	0.30

Dimension	Min	Max
X2	3.20	3.30
Y1	0.85	0.95
Y2	3.20	3.30

Notes:

General

1. All dimensions shown are in millimeters (mm) unless otherwise noted.
2. Dimensioning and Tolerancing is per the ANSI Y14.5M-1994 specification.
3. This Land Pattern Design is based on the IPC-7351 guidelines.

Solder Mask Design

4. All metal pads are to be non-solder mask defined (NSMD). Clearance between the solder mask and the metal pad is to be 60 µm minimum, all the way around the pad.

Stencil Design

5. A stainless steel, laser-cut and electro-polished stencil with trapezoidal walls should be used to assure good solder paste release.
6. The stencil thickness should be 0.125 mm (5 mils).
7. The ratio of stencil aperture to land pad size should be 1:1 for all perimeter pins.
8. A 3x3 array of 0.90 mm openings on a 1.1 mm pitch should be used for the center pad to assure the proper paste volume (67% Paste Coverage).

Card Assembly

9. A No-Clean, Type-3 solder paste is recommended.
10. The recommended card reflow profile is per the JEDEC/IPC J-STD-020 specification for Small Body Components.

6. USB Function Controller and Transceiver

The Universal Serial Bus function controller in the CP2102/9 is a USB 2.0 compliant full-speed device with integrated transceiver and on-chip matching and pull-up resistors. The USB function controller manages all data transfers between the USB and the UART as well as command requests generated by the USB host controller and commands for controlling the function of the UART.

The USB Suspend and Resume signals are supported for power management of both the CP2102/9 device as well as external circuitry. The CP2102/9 will enter Suspend mode when Suspend signaling is detected on the bus. On entering Suspend mode, the CP2102/9 asserts the SUSPEND and $\overline{\text{SUSPEND}}$ signals. SUSPEND and $\overline{\text{SUSPEND}}$ are also asserted after a CP2102/9 reset until device configuration during USB Enumeration is complete.

The CP2102/9 exits Suspend mode when any of the following occur: (1) Resume signaling is detected or generated, (2) a USB Reset signal is detected, or (3) a device reset occurs. On exit of Suspend mode, the SUSPEND and $\overline{\text{SUSPEND}}$ signals are de-asserted.

Both SUSPEND and $\overline{\text{SUSPEND}}$ temporarily float high during a CP2102/9 reset. If this behavior is undesirable, a strong pulldown (10 kΩ) can be used to ensure $\overline{\text{SUSPEND}}$ remains low during reset. See Figure 5 for other recommended options.

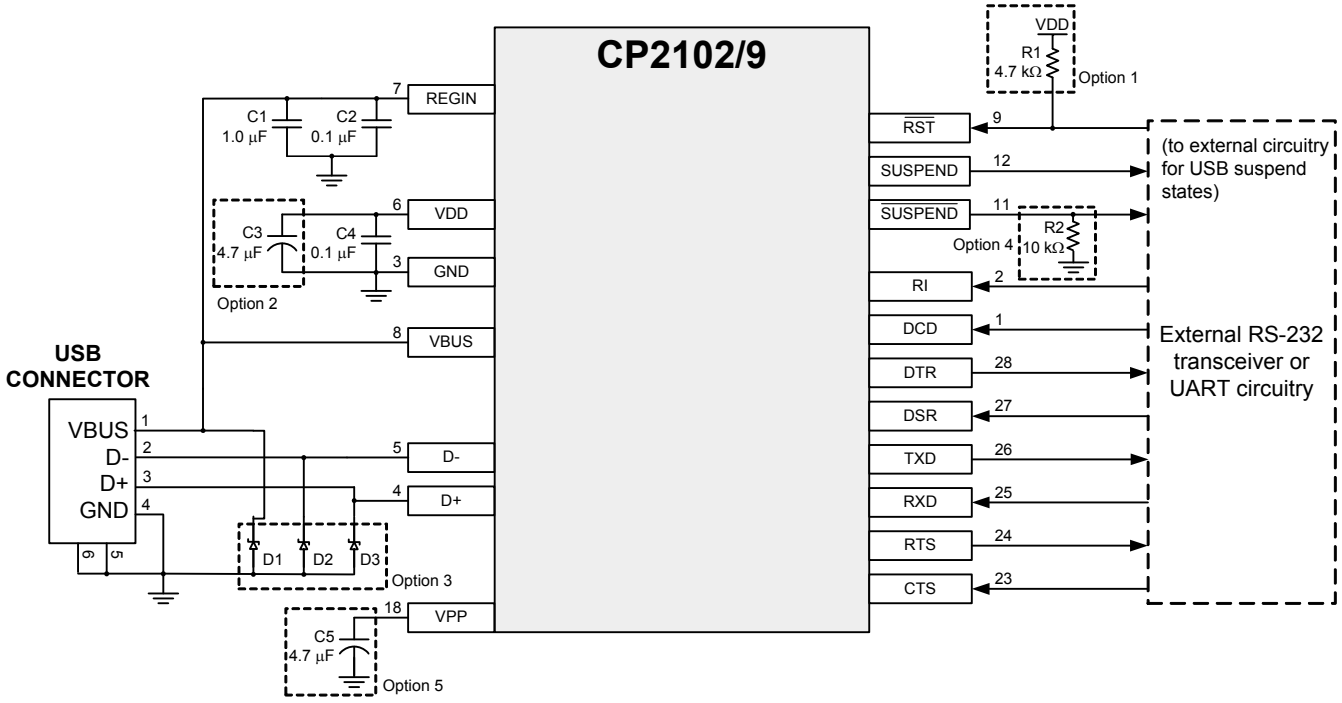

Option 1: A 4.7 kΩ pull-up resistor can be added to increase noise immunity.
Option 2: A 4.7 µF capacitor can be added if powering other devices from the on-chip regulator.
Option 3: Avalanche transient voltage suppression diodes should be added for ESD protection. Use Littlefuse p/n SP0503BAHT or equivalent.
Option 4: 10 kΩ resistor to ground to hold $\overline{\text{SUSPEND}}$ low on initial power on or device reset.
Option 5: A 4.7 µF capacitor can be added for in-system programming (CP2109 only).

Figure 5. Typical Connection Diagram

7. Asynchronous Serial Data Bus (UART) Interface

The CP2102/9 UART interface consists of the TX (transmit) and RX (receive) data signals as well as the RTS, CTS, DSR, DTR, DCD, and RI control signals. The UART supports RTS/CTS, DSR/DTR, and X-On/X-Off handshaking.

The UART is programmable to support a variety of data formats and baud rates. If the Virtual COM Port drivers are used, the data format and baud rate are set during COM port configuration on the PC. If the USBXpress drivers are used, the CP2102/9 is configured through the USBXpress API. The data formats and baud rates available are listed in Table 12.

Table 12. Data Formats and Baud Rates

Data Bits	5, 6, 7, and 8
Stop Bits	1, 1.5[1], and 2
Parity Type	None, Even, Odd, Mark, Space
Baud Rates[2]	300, 600, 1200, 1800, 2400, 4000, 4800, 7200, 9600, 14400, 16000, 19200, 28800, 38400, 51200, 56000, 57600, 64000, 76800, 115200, 128000, 153600, 230400, 250000, 256000, 460800, 500000, 576000, 921600[3]

Notes:
1. 5-bit only.
2. Additional baud rates are supported. See “AN721: CP210x/CP211x Device Customization Guide”.
3. 7 or 8 data bits only.

8. Internal Programmable ROM

The CP2102 includes an internal electrically erasable programmable read-only memory (EEPROM), and the CP2109 includes an internal one-time programmable (OTP) erasable programmable read-only memory (EPROM). Either may be used to customize the USB Vendor ID (VID), Product ID (PID), Product Description String, Power Descriptor, Device Release Number and Device Serial Number as desired for OEM applications. If the EEPROM/EPROM is not programmed with OEM data, the default configuration data shown in Table 13 is used. The EEPROM has a typical endurance of 100,000 write cycles with a data retention of 100 years. The EPROM can only be written one time and cannot be erased.

While customization of the USB configuration data is optional, it is recommended to customize the VID/PID combination. A unique VID/PID combination will prevent the driver from conflicting with any other USB driver. A vendor ID can be obtained from http://www.usb.org/ or Silicon Laboratories can provide a free PID for the OEM product that can be used with the Silicon Laboratories VID. It is also recommended to customize the serial number if the OEM application is one in which it is possible for multiple CP2102/9-based devices to be connected to the same PC.

The internal programmable ROM is programmed via the USB. This allows the OEM's USB configuration data and serial number to be written to the CP2102/9 on-board ROM during the manufacturing and testing process. A stand-alone utility for programming the internal programmable ROM is available from Silicon Laboratories. A library of routines provided in the form of a Windows® DLL is also available. This library can be used to integrate the programmable ROM programming step into custom software used by the OEM to streamline testing and serial number management during manufacturing.

USB descriptors can be locked to prevent future modification on the CP2102. The CP2109 can be programmed in-system over the USB interface by adding a capacitor to the PCB. If configuration ROM is to be programmed in-system, a 4.7 µF capacitor must be added between the V_{PP} pin and ground. **No other circuitry should be connected to V_{PP} during a programming operation, and V_{DD} must remain at 3.3 V or higher to successfully write to the configuration ROM.**

Table 13. Default USB Configuration Data

Name	Value
Vendor ID	10C4h
Product ID	EA60h
Power Descriptor (Attributes)	80h
Power Descriptor (Max. Power)	32h
Release Number	0100h
CP2102 Serial Number	0001 (63 characters maximum)
CP2109 Serial Number	Unique 8 character ASCII string (63 characters maximum)
CP2102 Product Description String	“CP2102 USB to UART Bridge Controller” (126 characters maximum)
CP2109 Product Description String	“CP2109 USB to UART Bridge Controller” (126 characters maximum)

9. CP2102/9 Device Drivers

There are two sets of device drivers available for the CP2102/9 devices: the Virtual COM Port (VCP) drivers and the USBXpress Direct Access drivers. Only one set of drivers is necessary to interface with the device.

The latest drivers are available at http://www.silabs.com/support/Pages/software-downloads.aspx.

9.1. Virtual COM Port Drivers

The CP2102/9 Virtual COM Port (VCP) device drivers allow a CP2102/9-based device to appear to the PC's application software as a COM port. Application software running on the PC accesses the CP2102/9-based device as it would access a standard hardware COM port. However, actual data transfer between the PC and the CP2102/9 device is performed over the USB interface. Therefore, existing COM port applications may be used to transfer data via the USB to the CP2102/9-based device without modifying the application. See “AN197: Serial Communications Guide for the CP210x” for Example Code for Interfacing to a CP2102/9 using the Virtual COM drivers.

9.2. USBXpress Drivers

The Silicon Laboratories USBXpress drivers provide an alternate solution for interfacing with CP2102/9 devices. No Serial Port protocol expertise is required. Instead, a simple, high-level application program interface (API) is used to provide simpler CP210x connectivity and functionality. The USBXpress for CP210x Development Kit includes Windows device drivers, Windows device driver installer and uninstallers, and a host interface function library (host API) provided in the form of a Windows Dynamic Link Library (DLL). The USBXpress driver set is recommended for new products that also include new PC software. The USBXpress interface is described in “AN169: USBXpress® Programmer's Guide.”

9.3. Driver Customization

In addition to customizing the device as described in "8. Internal Programmable ROM" on page 16, the drivers and the drivers installation package can be also be customized. See “AN220: USB Driver Customization” for more information on generating customized VCP and USBXpress drivers.

9.4. Driver Certification

The default drivers that are shipped with the CP2102/9 are Microsoft WHQL (Windows Hardware Quality Labs) certified. The certification means that the drivers have been tested by Microsoft and their latest operating systems (2000, Server 2003, XP, Vista, 7, and 8) will allow the drivers to be installed without any warnings or errors. Some installations of Windows will prevent unsigned drivers from being installed at all.

The customized drivers that are generated using the AN220 software are not automatically certified. They must first go through the Microsoft Driver Reseller Submission process. Contact Silicon Laboratories support for assistance with this process.

10. Voltage Regulator

The CP2102/9 includes an on-chip 5 to 3 V voltage regulator. This allows the CP2102/9 to be configured as either a USB bus-powered device or a USB self-powered device. These configurations are shown in Figure 6, Figure 7, Figure 8, Figure 9, and Figure 10. When enabled, the 3 V voltage regulator output appears on the V_{DD} pin and can be used to power external 3 V devices. See Table 6 for the voltage regulator electrical characteristics.

Alternatively, if 3 V power is supplied to the V_{DD} pin, the CP2102/9 can function as a USB self-powered device with the voltage regulator disabled. For this configuration, it is recommended that the REGIN input be tied to the 3 V net to disable the voltage regulator. In addition, if VDD or REGIN may be unpowered while VBUS is 5 V, a resistor divider (or functionally-equivalent circuit) shown in Note 1 of Figure 8 and Figure 10 is required to meet the absolute maximum voltage on VBUS specification in Table 2.

The USB max power and power attributes descriptor must match the device power usage and configuration. See "AN721: CP210x/CP211x Device Customization Guide" for information on how to customize USB descriptors for the CP2102/9.

Note: It is recommended to connect additional decoupling capacitance (e.g., 0.1 µF in parallel with 1.0 µF) to the REGIN input.

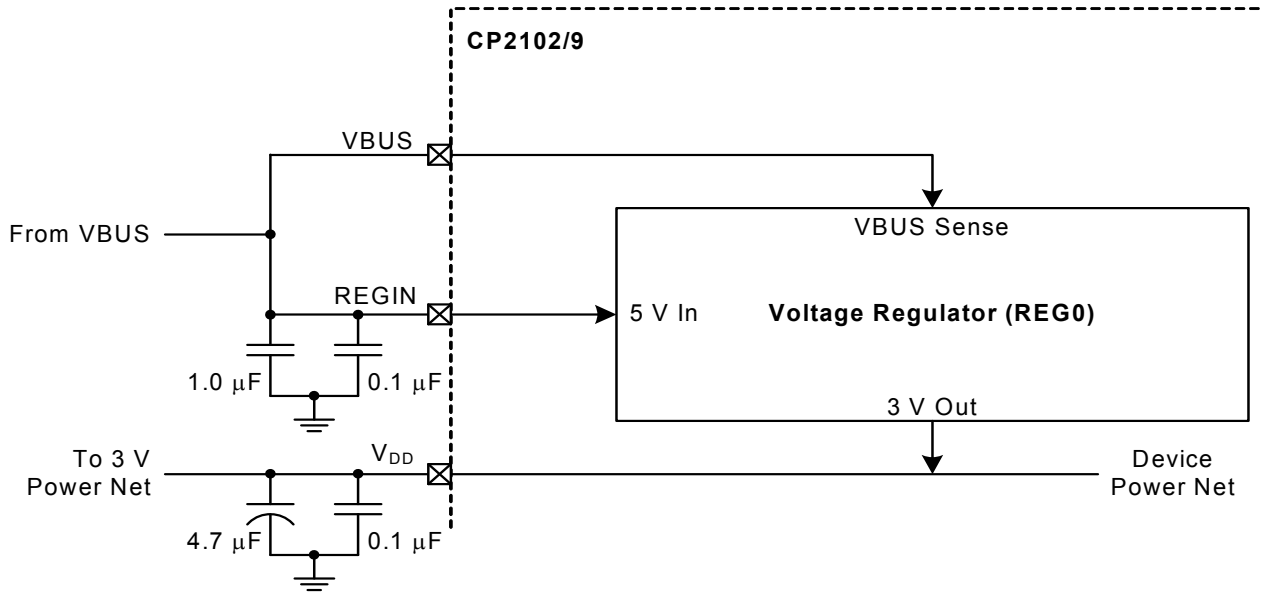

Figure 6. Configuration 1: USB Bus-Powered

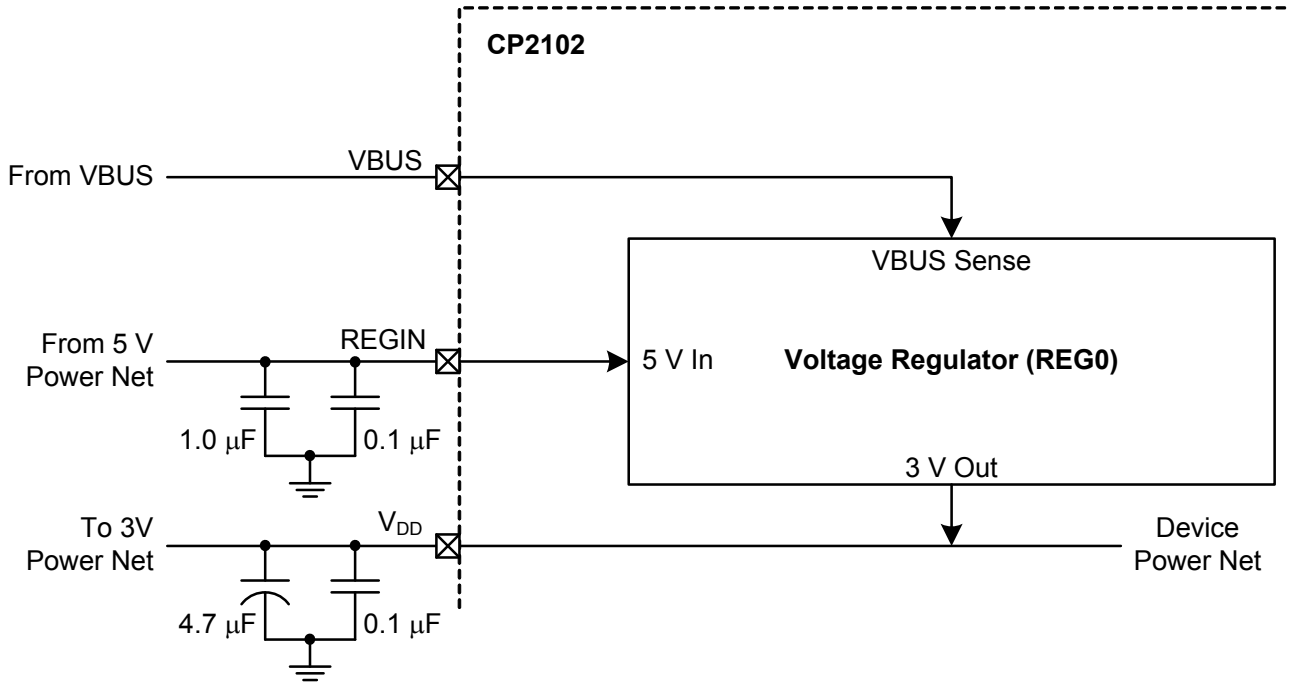

Figure 7. CP2102 Configuration 2: USB Self-Powered

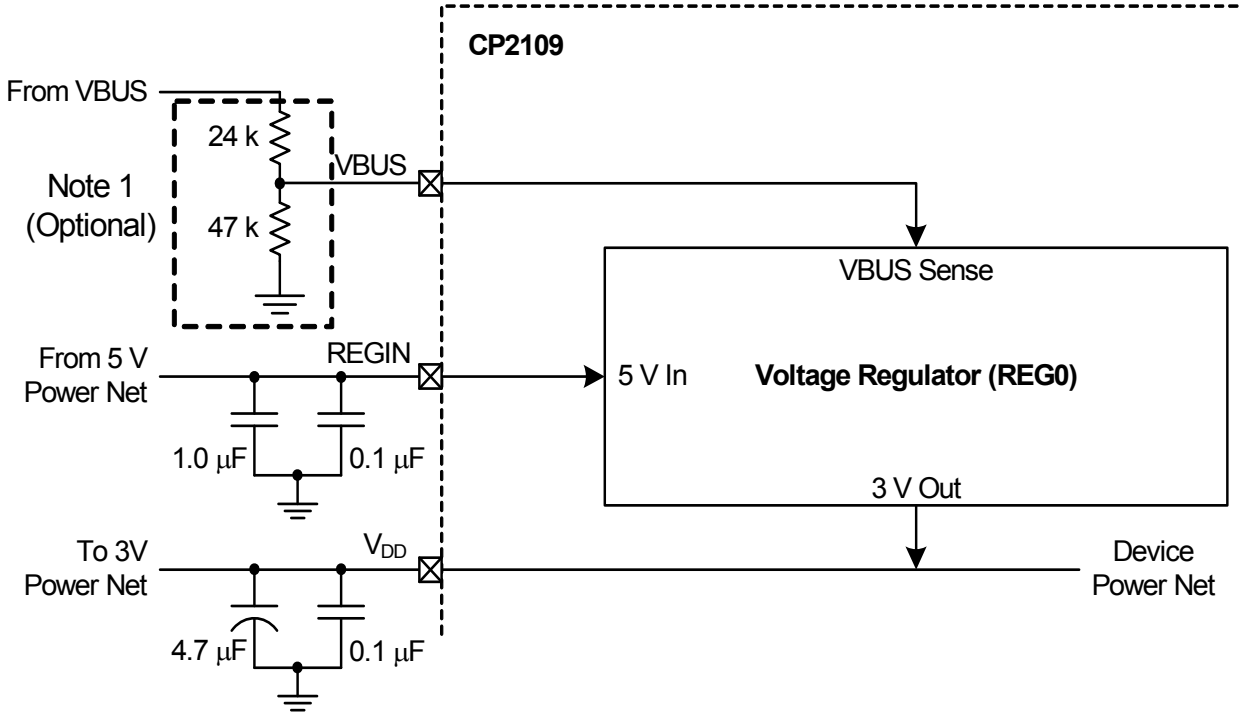

Note 1 : For self-powered systems where VDD or REGIN may be unpowered when VBUS is connected to 5 V, a resistor divider (or functionally-equivalent circuit) on VBUS is required to meet the absolute maximum voltage on VBUS specification in the Electrical Characteristics section.

Figure 8. CP2109 Configuration 2: USB Self-Powered

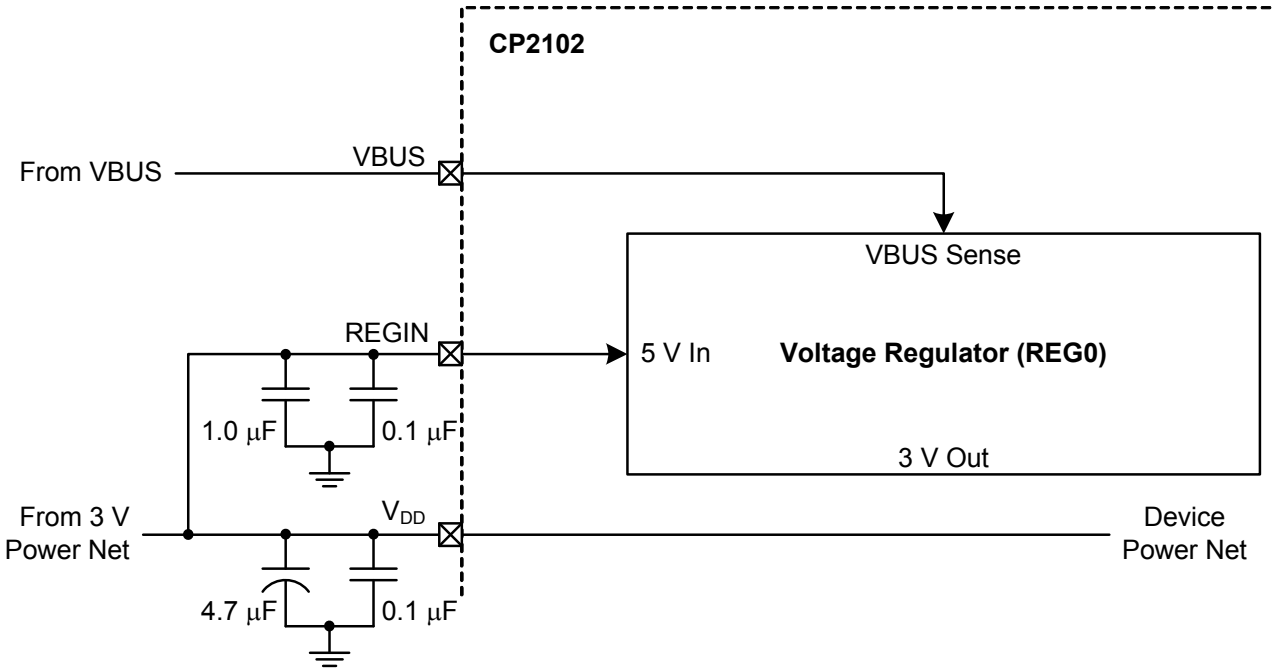

Figure 9. CP2102 Configuration 3: USB Self-Powered, Regulator Bypassed

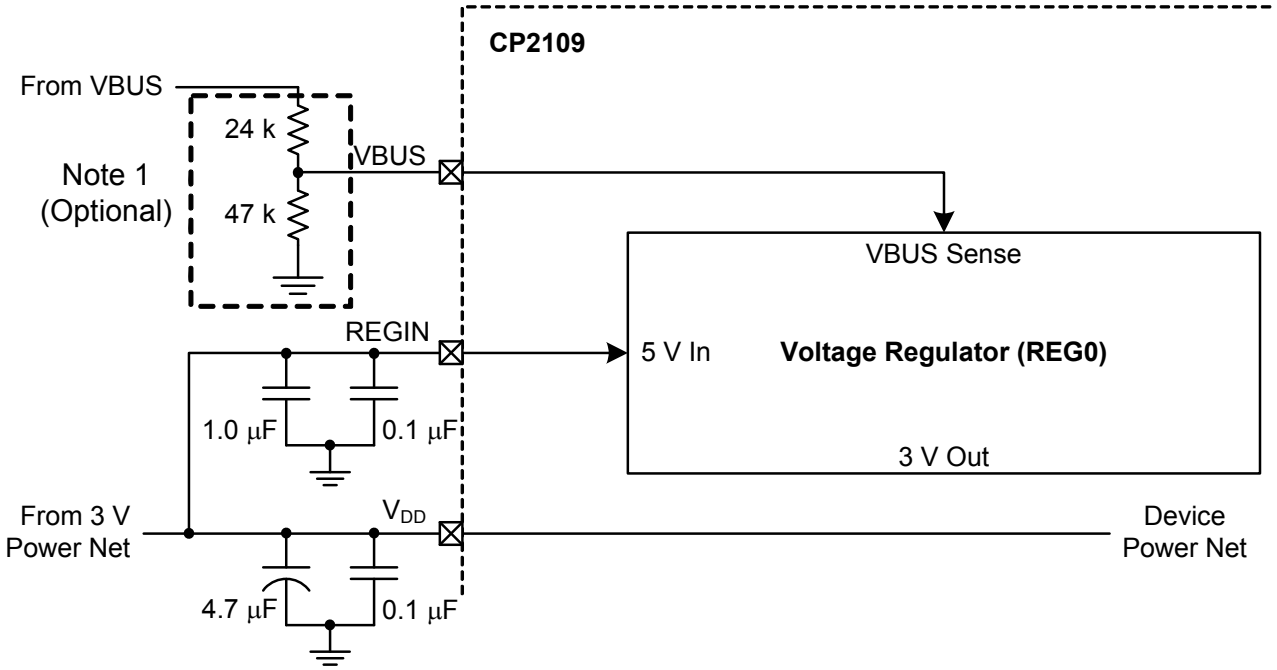

Note 1 : For self-powered systems where VDD or REGIN may be unpowered when VBUS is connected to 5 V, a resistor divider (or functionally-equivalent circuit) on VBUS is required to meet the absolute maximum voltage on VBUS specification in the Electrical Characteristics section.

Figure 10. CP2109 Configuration 3: USB Self-Powered, Regulator Bypassed

11. Porting Considerations from CP2102 to CP2109

This section highlights the differences between the CP2102 and CP2109. These devices are designed to be pin-compatible, and thus require very minor changes when porting hardware between devices. The CP2109 is an updated, cost-reduced version of the CP2102 with a one-time programmable ROM.

11.1. Pin-Compatibility

The CP2109 is pin-compatible with the CP2102 with a single exception; the CP2109 requires an additional capacitor between V_{PP} and GND for in-application programming. This capacitor is not required after the CP2109 EPROM has been successfully programmed or if the CP2109 does not need to be customized in system.

11.2. Distinguishing Factors

The CP2102 has 1024 bytes of EEPROM for vendor ID (VID), product ID (PID), serial number, power descriptor, release number, and product description strings. This configuration EEPROM can be written and re-written multiple times. The CP2109 has 1024 bytes of one-time programmable EPROM for configuration. This configuration EPROM can only be written one time.

The CP2109 may require an additional capacitor on V_{PP} if in-application programming is desired.

The CP2102 default serial number is always “0001”. Every CP2109 is programmed from the factory with a unique serial number.

11.3. Differences in Electrical Specifications

Table 14 and Table 15 list differences in absolute maximum and electrical specifications between the CP2102 and CP2109. Refer to "3. Electrical Specifications" on page 5 for the comprehensive electrical specifications.

Table 14. Differences in Absolute Maximum Specifications between CP2102 and CP2109

Parameter	Symbol	Test Condition	CP2102	CP2109	Unit
Voltage on any I/O Pin, VBUS, or RST with respect to GND, Maximum		V_{DD} > 3.0 V V_{DD} not powered	5.8 5.8	5.8 V_{DD} + 3.6	V

Table 15. Differences in Electrical Specifications between CP2102 and CP2109

Parameter	Symbol	Test Condition	CP2102	CP2109	Unit
Supply Current—Normal, Typical	I_{REGIN}	Normal Operation; V_{REG} Enabled	20	17	mA
Supply Current—Normal, Maximum	I_{REGIN}	Normal Operation; V_{REG} Enabled	26	23	mA
Supply Current—Suspended, Typical	I_{REGIN}	Bus Powered; V_{REG} Enabled	80	90	µA
Supply Current—Suspended, Maximum	I_{REGIN}	Bus Powered; V_{REG} Enabled	100	230	µA
Output High Voltage, Minimum	V_{OH}	I_{OH} = –3 mA	V_{DD} – 0.7	V_{DD} – 0.2	V
Output High Voltage, Typical	V_{OH}	I_{OH} = –10 mA	V_{DD} – 0.8	V_{DD} – 0.4	V
Output Low Voltage, Maximum	V_{OL}	I_{OL} = 8.5 mA	0.6	0.4	V
Output Low Voltage, Typical	V_{OL}	I_{OL} = 25 mA	1.0	0.6	V
Input High Voltage, Minimum	V_{IH}		2.0	0.7 x V_{DD}	V
Input Low Voltage, Maximum	V_{IL}		0.8	0.6	V

Table 15. Differences in Electrical Specifications between CP2102 and CP2109 (Continued)

Parameter	Symbol	Test Condition	CP2102	CP2109	Unit
$\overline{RST}$ Input High Voltage, Minimum	$V_{IHRESET}$		0.7 x V_{DD}	0.75 x V_{DD}	V
$\overline{RST}$ Input Low Voltage, Maximum	$V_{ILRESET}$		0.25 x V_{DD}	0.6	V
Regulator Input Voltage Range, Minimum	V_{REGIN}		4.0	3.0	V
Regulator Output Voltage, Minimum	V_{DDOUT}	Output Current = 1 to 100 mA*	3.0	3.3	V
Regulator Output Voltage, Typical	V_{DDOUT}	Output Current = 1 to 100 mA*	3.3	3.45	V
VBUS Detection Input Threshold, Minimum	V_{VBUSTH}		1.0	2.5	V
VBUS Detection Input Threshold, Typical	V_{VBUSTH}		1.8	—	V
VBUS Detection Input Threshold, Maximum	V_{VBUSTH}		2.9	—	V
Regulator Bias Current, Typical			90	83	µA
Regulator Bias Current, Maximum			—	99	µA
USB Transceiver Output Impedance, Typical	Z_{DRV}	Driving High Driving Low	38 38	36 36	Ω
Voltage on V_{PP} with respect to GND during a ROM programming operation, Minimum		V_{DD} > 3.3 V	—	5.75	V
Voltage on V_{PP} with respect to GND during a ROM programming operation, Maximum		V_{DD} > 3.3 V	—	V_{DD} + 3.6	V
Capacitor on V_{PP} for In-application Programming, Typical			—	4.7	µF

12. Relevant Application Notes

The following application notes are applicable to the CP2102/9. The latest versions of these application notes and their accompanying software are available at:
http://www.silabs.com/products/mcu/Pages/ApplicationNotes.aspx.

- **AN169: USBXpress® Programmer's Guide**—This application note describes the USBXpress API interface and includes example code.
- **AN197: Serial Communications Guide for the CP210x**—This application note describes how to use the standard Windows COM port function to communicate with the CP2102/9 and includes example code.
- **AN220: USB Driver Customization—**This application note describes how to use the AN220 software to customize the VCP or USBXpress drivers with OEM information.
- **AN721: CP210x/CP211x Device Customization Guide**—This application note describes how to use the AN721 software to configure the USB parameters on the CP2102/9 devices.

DOCUMENT CHANGE LIST

Revision 1.0 to Revision 1.1

- Updated “Linux 2.40” bullet on page 1.
- Changed MLP to QFN throughout.

Revision 1.1 to Revision 1.2

- Added additional supported operating systems on page 1.
- Changed VDD conditions of Tables 3 and 4 from a minimum of 2.7 to 3.0 V.
- Updated typical and max Supply Current number in Table 3.
- Removed tantalum requirement in Figure 5.
- Consolidated Sections 8 and 9.
- Added Section "12. Relevant Application Notes" on page 23.

Revision 1.2 to Revision 1.3

- Updated Figure 1 on page 1.
- Updated Figure 5 on page 14.
- Updated Maximum VBUS Detection Input Threshold in Table 6 on page 8.

Revision 1.3 to Revision 1.4

- Updated Table 4 RST Input Low Voltage
- Updated Table 10, Note 4.
- Updated Table 11, Note 10.

Revision 1.4 to Revision 1.5

- Added CP2109.
- Updated Single-Chip USB to UART Data Transfer bullet on page 1.
- Added CP2109 to Ordering Part Numbers on page 1.
- Updated Section "1. System Overview" on page 3.
- Updated Figure 1.
- Added Section "2. Ordering Information" on page 4.
- Added Symbol columns to Tables in Section "3. Electrical Specifications" on page 5.
- Updated Table 3.
  - Added CP2109, Note 1, Note 2.
  - Updated thermal resistance spec.
  - Updated normal supply current spec.
- Updated Table 4, added CP2109, added Baud Rate.
- Updated Table 5, added CP2109, added V_{DD} Ramp Time.
- Moved Table 6.
- Updated Table 6, added CP2109.
- Added Table 7.
- Added Table 8.
- Updated Table 9.
  - Updated pin 18 spec, Note 1, Note 2.
- Updated Figure 2, added CP2109, pin 18.
- Updated Section "6. USB Function Controller and Transceiver" on page 14, added CP2109.
- Updated Figure 5, added CP2109, Option 5.

- Updated Section "8. Internal Programmable ROM" on page 16, added CP2109.
- Updated Table 12.
  - Updated Note 2 app note reference.
- Updated Table 13.
  - Added CP2109.
- Updated Table 15.
  - Updated normal maximum and suspended maximum supply current specs.
- Updated Section "10. Voltage Regulator" on page 18, changed AN144 to AN721.
- Added Section "11. Porting Considerations from CP2102 to CP2109" on page 21.
- Updated "11.2. Distinguishing Factors" on page 21.
  - Updated CP2102 default serial number to “0001”.
- Updated Section "12. Relevant Application Notes" on page 23.
  - Replaced AN144/AN205 with AN721.

Revision 1.5 to Revision 1.6

- Added mention of VBUS in Table 2, “Absolute Maximum Ratings,” on page 5 and split out port I/O maximums for CP2102 and CP2109.
- Added V_{PP} voltage specifications to Table 8, “EPROM Electrical Characteristics,” on page 9.
- Updated "10. Voltage Regulator" on page 18 to add CP2109 absolute maximum voltage on VBUS requirements in self-powered systems.
- Updated "11.3. Differences in Electrical Specifications" on page 21 to include the new or modified specifications.

Revision 1.6 to Revision 1.7

- Added Note to front page

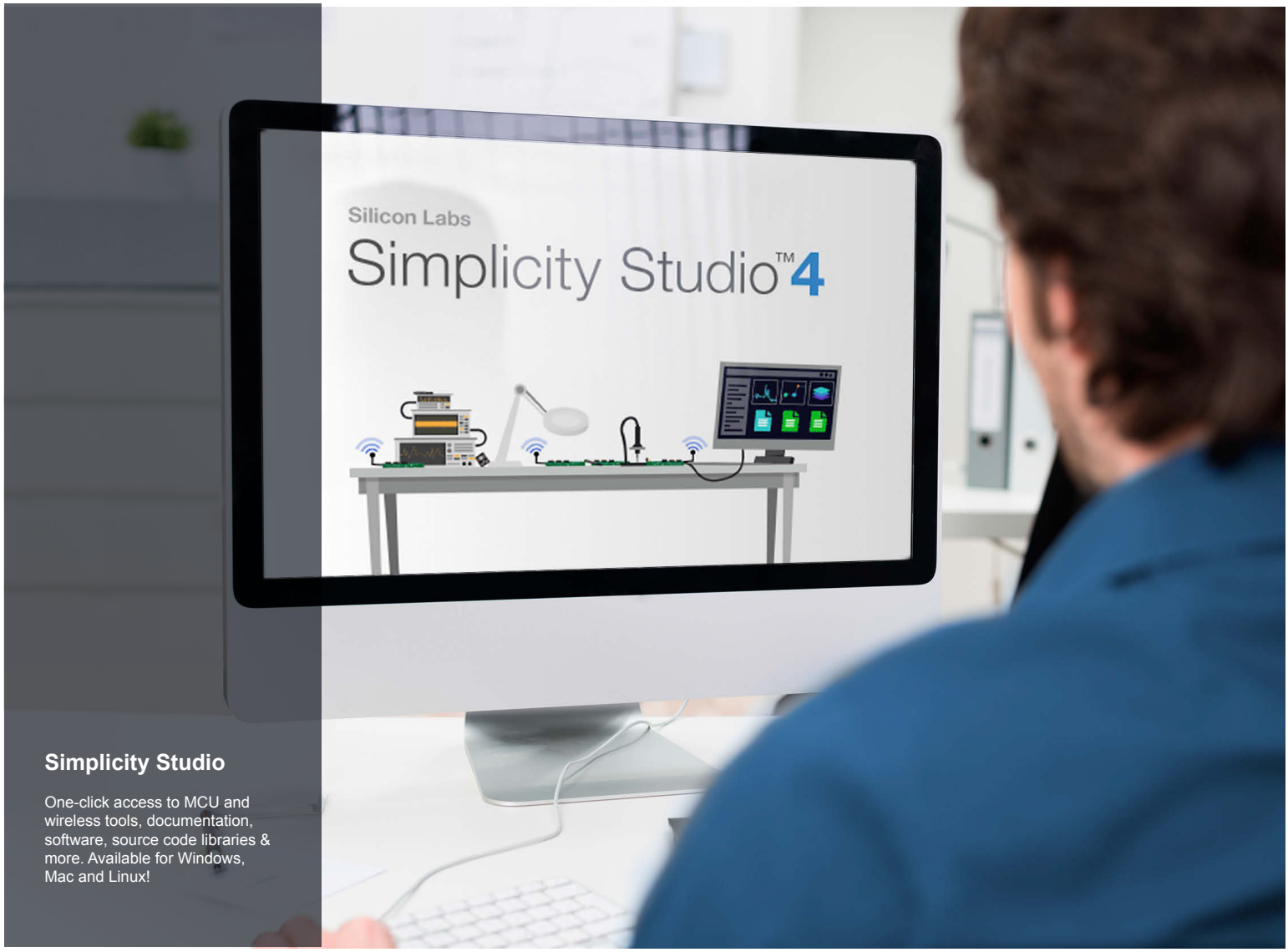

Simplicity Studio

One-click access to MCU and wireless tools, documentation, software, source code libraries & more. Available for Windows, Mac and Linux!

IoT Portfolio
www.silabs.com/IoT

SW/HW
www.silabs.com/simplicity

Quality
www.silabs.com/quality

Support and Community
community.silabs.com

Disclaimer
Silicon Laboratories intends to provide customers with the latest, accurate, and in-depth documentation of all peripherals and modules available for system and software implementers using or intending to use the Silicon Laboratories products. Characterization data, available modules and peripherals, memory sizes and memory addresses refer to each specific device, and "Typical" parameters provided can and do vary in different applications. Application examples described herein are for illustrative purposes only. Silicon Laboratories reserves the right to make changes without further notice and limitation to product information, specifications, and descriptions herein, and does not give warranties as to the accuracy or completeness of the included information. Silicon Laboratories shall have no liability for the consequences of use of the information supplied herein. This document does not imply or express copyright licenses granted hereunder to design or fabricate any integrated circuits. The products are not designed or authorized to be used within any Life Support System without the specific written consent of Silicon Laboratories. A "Life Support System" is any product or system intended to support or sustain life and/or health, which, if it fails, can be reasonably expected to result in significant personal injury or death. Silicon Laboratories products are not designed or authorized for military applications. Silicon Laboratories products shall under no circumstances be used in weapons of mass destruction including (but not limited to) nuclear, biological or chemical weapons, or missiles capable of delivering such weapons.

Trademark Information
Silicon Laboratories Inc.® , Silicon Laboratories®, Silicon Labs®, SiLabs® and the Silicon Labs logo®, Bluegiga®, Bluegiga Logo®, Clockbuilder®, CMEMS®, DSPLL®, EFM®, EFM32®, EFR, Ember®, Energy Micro, Energy Micro logo and combinations thereof, "the world's most energy friendly microcontrollers", Ember®, EZLink®, EZRadio®, EZRadioPRO®, Gecko®, ISOmodem®, Precision32®, ProSLIC®, Simplicity Studio®, SiPHY®, Telegesis, the Telegesis Logo®, USBXpress® and others are trademarks or registered trademarks of Silicon Laboratories Inc. ARM, CORTEX, Cortex-M3 and THUMB are trademarks or registered trademarks of ARM Holdings. Keil is a registered trademark of ARM Limited. All other products or brand names mentioned herein are trademarks of their respective holders.

SILICON LABS®

Silicon Laboratories Inc.
400 West Cesar Chavez
Austin, TX 78701
USA

http://www.silabs.com

AMEYA360
Components Supply Platform

Authorized Distribution Brand :

Website :

Welcome to visit www.ameya360.com

Contact Us :

- ## Address :

401 Building No.5, JiuGe Business Center, Lane 2301, Yishan Rd
Minhang District, Shanghai , China

- ## Sales :

Direct +86 (21) 6401-6692

Email amall@ameya360.com

QQ 800077892

Skype ameyasales1 ameyasales2

- ## Customer Service :

Email service@ameya360.com

- ## Partnership :

Tel +86 (21) 64016692-8333

Email mkt@ameya360.com