REV.	DESCRIPTION/ECO NO.	DATE
	RELEASED TO CAD	7/12/06

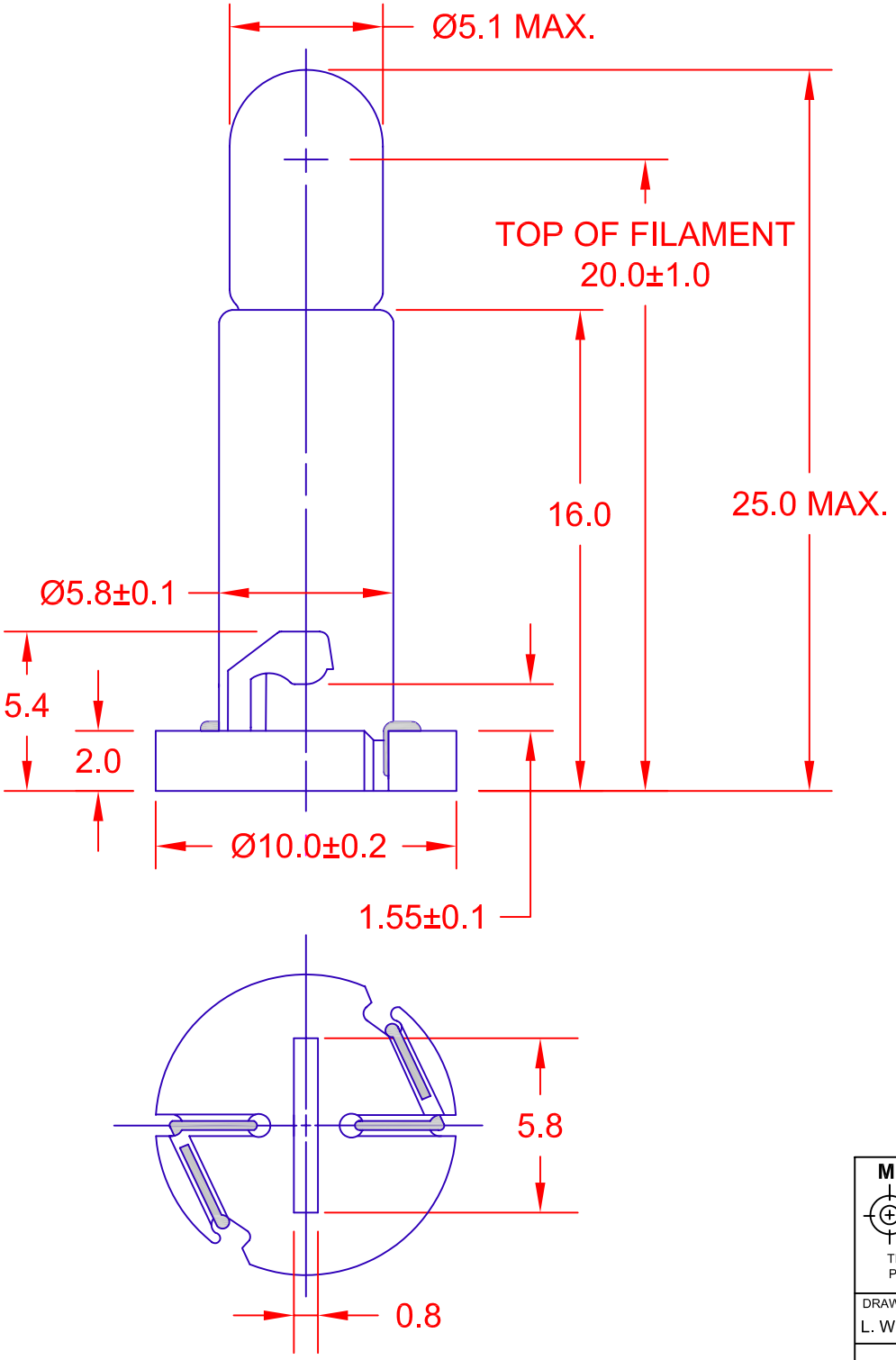

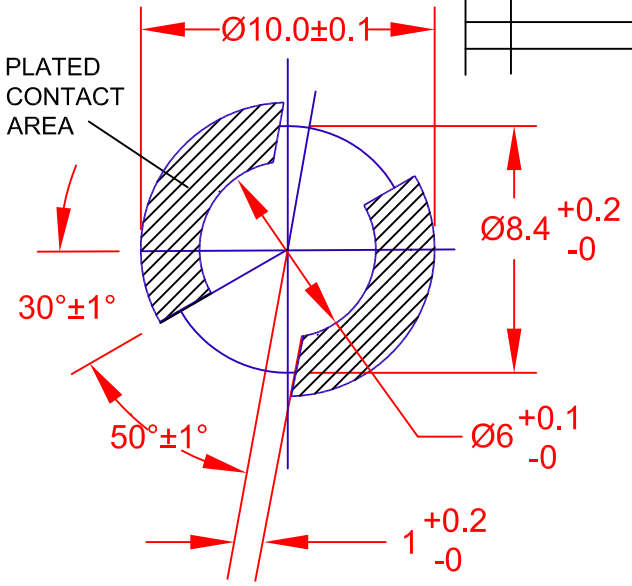

PC BOARD PUNCH PATTERN

JKL PART NUMBER: DNW1-EW37/25MM

LAMP NUMBER: EW37

VOLTS RATED	AMPS ± 10%	*MSCP ± 25%	*LUMENS ± 25%	AVERAGE LIFE HRS.	FILAMENT TYPE
14.0	.125	.700	9.00	10,000	C-2V

* LAMP RATING ONLY WITHOUT BASE.

METRIC THIRD ANGLE PROJECTION	DIMENSIONS ARE IN MILLIMETERS TOLERANCE UNLESS OTHERWISE SPECIFIED 1 PL +/- 0.2 2 PL +/- 0.20 ANGLE +/- 0	JKL COMPONENTS CORPORATION				
		TITLE	DNW1 EXTENDED NEO-WEDGE BASE WITH EW37 LAMP			
DRAWN BY L. WENGSTROM	APPV'D BY E.D. DATE 7/12/06	SIZE A	FSCM NO. 55335	DRAWING NO.	DNW1-EW37/25MM	
- CAD DRAWING - MANUAL REVISIONS NOT PERMITTED		SCALE NONE		RELEASED DATE 7/12/06	REVISION DATE	REV. NO. / SHEET 1 OF 1

AMEYA360
Components Supply Platform

Authorized Distribution Brand :

Website :

Welcome to visit www.ameya360.com

Contact Us :

- **Address :**

  401 Building No.5, JiuGe Business Center, Lane 2301, Yishan Rd
  Minhang District, Shanghai , China

- **Sales :**

  Direct +86 (21) 6401-6692

  Email amall@ameya360.com

  QQ 800077892

  Skype ameyasales1 ameyasales2

- **Customer Service :**

  Email service@ameya360.com

- **Partnership :**

  Tel +86 (21) 64016692-8333

  Email mkt@ameya360.com