19-5033; Rev 1; 8/10

EVALUATION KIT AVAILABLE

Two-Lane and Four-Lane DisplayPort Passive Switches with Separate AUX/HPD Control

MAX4998/MAX14998

General Description

The MAX4998/MAX14998 high-speed passive switches route DisplayPort™ between two possible destinations or vice versa in laptops or desktop PCs. The MAX4998/MAX14998 are intended to be used where ultra-high-speed performance and minimal input capacitance is required.

The MAX4998 has three double-pole/double-throw (DPDT) switches and one single-pole/double-throw (SPDT) switch. Two DPDT switches are for high-frequency switching, one DPDT switch is for AUX, and the one SPDT switch is for HPD. The two high-frequency switches are selected by SEL1, and the AUX and HPD are selected by SEL2. This part is suitable for two-lane DisplayPort switching.

The MAX14998 has six double-pole/double-throw (DPDT) switches. Four DPDT switches are for high-frequency switching, and two DPDT switches are for AUX and HPD. The four high-frequency switches are selected by SEL1, and the AUX and HPD are selected by SEL2. This part is suitable for four-lane DisplayPort switching.

The MAX4998/MAX14998 are fully specified to operate from a single +3.3V (typ) power supply. The MAX4998 is available in a 3.5mm x 5.5mm, 28-pin TQFN package with exposed pad, and the MAX14998 is available in a 3.5mm x 9mm, 42-pin TQFN package with exposed pad. Both devices operate over the -40°C to +85°C extended temperature range.

Applications

Notebook PCs

Desktop PCs

Features

- **Single 3.3V Power-Supply Voltage**
- **8.5GHz (typ) Bandwidth**
- **Support 1.6/5.4Gbps DisplayPort Signals**
  - **Handles DisplayPort v1.1 Signals**
  - **Handles DisplayPort v1.2 Signals**
- **Excellent Return Loss -13dB at 2.7GHz**
- **Independent High Frequency: AUX Select**
- **Designed for AC-Coupled Circuits**
- **Pass Throughs Are Maintained**
- **Low 850µA (max) Supply Current**
- **Small Packages**
  - **3.5mm x 5.5mm, 28-Pin TQFN Package with Exposed Pad**
  - **3.5mm x 9mm, 42-Pin TQFN Package with Exposed Pad**
- **Flow-Through Layout for Easy Board Layout**
- **ESD Protection for All I/O Pins: Human Body Model (HBM) ±4kV**

Ordering Information

PART	TEMP RANGE	PIN-PACKAGE
MAX4998ETI+T	-40°C to +85°C	28 TQFN-EP*
MAX14998ETO+T	-40°C to +85°C	42 TQFN-EP*

+Denotes a lead(Pb)-free/RoHS-compliant package.
T = Tape and reel.
**EP = Exposed pad.*

Typical Operating Circuit appears at end of data sheet.

DisplayPort is a trademark of Video Electronics Standards Association (VESA).

For pricing, delivery, and ordering information, please contact Maxim Direct at 1-888-629-4642, or visit Maxim's website at www.maxim-ic.com.

Two-Lane and Four-Lane DisplayPort Passive Switches with Separate AUX/HPD Control

ABSOLUTE MAXIMUM RATINGS

(All voltages referenced to GND, unless otherwise noted.)
V_{DD} ..... -0.3V to +4V
SEL1, SEL2, COM_, NO_, NC_ (Note 1) ..... -0.3V to +(V_{DD} + 0.3)V
$|V_{COM_} - V_{NO_}|$, $|V_{COM_} - V_{NC_}|$ (Note 1) ..... 0 to +2V
Continuous Current (COM_ to NO_/NC_) ..... ±70mA
Peak Current (COM_ to NO_/NC_)
(pulsed at 1ms, 10% duty cycle) ..... ±70mA
Continuous Current (SEL1, SEL2) ..... ±30mA
Peak Current (SEL1, SEL2)
(pulsed at 1ms, 10% duty cycle) ..... ±70mA
Continuous Power Dissipation (T_A = +70°C)
28-Pin TQFN (derate 28.6mW/°C above +70°C) 2285mW
42-Pin TQFN (derate 34.5mW/°C above +70°C) 2758mW
Operating Temperature Range ..... -40°C to +85°C
Junction Temperature ..... +150°C
Storage Temperature Range ..... -65°C to +150°C
Package Junction-to-Ambient Thermal Resistance (θ_{JA}) (Note 2)
28-Pin TQFN ..... 35°C/W
42-Pin TQFN ..... 29°C/W
Package Junction-to-Case Thermal Resistance (θ_{JC}) (Note 2)
28-Pin TQFN ..... 2.7°C/W
42-Pin TQFN ..... 2°C/W
Lead Temperature (soldering, 10s) ..... +300°C
Soldering Temperature (reflow) ..... +260°C

Note 1: Signals on COM_, NO_, NC_, SEL1, and SEL2 exceeding V_{DD} or GND are clamped by internal diodes. Limit forward-diode current to the maximum current rating.

Note 2: Package thermal resistances were obtained using the method described in JEDEC specification JESD51-7, using a four-layer board. For detailed information on package thermal considerations, refer to **www.maxim-ic.com/thermal-tutorial**.

Stresses beyond those listed under "Absolute Maximum Ratings" may cause permanent damage to the device. These are stress ratings only, and functional operation of the device at these or any other conditions beyond those indicated in the operational sections of the specifications is not implied. Exposure to absolute maximum rating conditions for extended periods may affect device reliability.

ELECTRICAL CHARACTERISTICS

(V_{DD} = +3.3V ±10%, T_A = T_{MIN} to T_{MAX}, unless otherwise noted. Typical values are at V_{DD} = +3.3V, T_A = +25°C, unless otherwise noted.) (Note 3)

PARAMETER	SYMBOL	CONDITIONS	MIN	TYP	MAX	UNITS
ANALOG SWITCH						
Analog Signal Range	$V_{COM_}$, $V_{NO_}$, $V_{NC_}$				(V_{DD} - 1.8)	V
Voltage Between COM_ and NO_/NC_	$\lvert V_{COM_} - V_{NO_}\rvert$, $\lvert V_{COM_} - V_{NC_}\rvert$		0		1.8	V
On-Resistance	R_{ON}	$I_{COM_}$ = 15mA; $V_{NO_}$, $V_{NC_}$ = 0V, +1.2V		7		Ω
On-Resistance Match Between Pairs of Same Channel	ΔR_{ON}	V_{DD} = +3.0V; $I_{COM_}$ = 15mA; $V_{NO_}$, $V_{NC_}$ = 0V (Notes 4, 5)		0.1	2	Ω
On-Resistance Match Between Channels	ΔR_{ON}	V_{DD} = +3.0V; $I_{COM_}$ = 15mA; $V_{NO_}$, $V_{NC_}$ = 0V (Notes 4, 5)		1.0	4	Ω
On-Resistance Flatness	$R_{FLAT(ON)}$	V_{DD} = +3.0V; $I_{COM_}$ = 15mA; $V_{NO_}$, $V_{NC_}$ = 0V, +1.2V (Notes 5, 6)		0.3	1.5	Ω
NO_ or NC_ Off-Leakage Current	$I_{NO_(OFF)}$ $I_{NC_(OFF)}$	V_{DD} = +3.6V; $V_{COM_}$ = 0V, +1.2V; $V_{NO_}$ or $V_{NC_}$ = +1.2V, 0V	-1		1	µA
COM_ On-Leakage Current	$I_{COM_(ON)}$	V_{DD} = +3.6V; $V_{COM_}$ = 0V, +1.2V; $V_{NO_}$ or $V_{NC_}$ = $V_{COM_}$ or unconnected	-1		1	µA
DIGITAL SIGNALS						
SEL1 and SEL2 to Switch Turn-On Time	t_{ON_SEL}	$V_{NO_}$ or $V_{NC_}$ = +1.0V, R_L = 50Ω, C_L = 100pF (Figure 1)		45	120	ns

ELECTRICAL CHARACTERISTICS (continued)

(V_{DD} = +3.3V ±10%, T_A = T_{MIN} to T_{MAX}, unless otherwise noted. Typical values are at V_{DD} = +3.3V, T_A = +25°C, unless otherwise noted.) (Note 3)

PARAMETER	SYMBOL	CONDITIONS	MIN	TYP	MAX	UNITS
SEL1 and SEL2 to Switch Turn-Off Time	t_{OFF_SEL}	$V_{NO_}$ or $V_{NC_}$ = +1.0V, R_L = 50Ω, C_L = 100pF (Figure 1)		5	50	ns
Differential Insertion Loss	S_{DD21}	f = 0.8GHz (Figure 2)		-0.67		dB
		f = 1.35GHz (Figure 2)		-0.95		
Differential Crosstalk	S_{DDCTK}	f = 0.8GHz (Figure 2)		-37		dB
		f = 1.35GHz (Figure 2)		-34		
Differential Return Loss	S_{DD11}	f = 0.8GHz (Figure 2)		-20		dB
		f = 1.35GHz (Figure 2)		-14		
Signal Data Rate	BR	R_S = R_L = 100Ω balanced		17		Gbps
Differential -3dB Bandwidth	f_{-3BW}	R_S = R_L = 100Ω balanced		8.5		GHz
Differential Off-Isolation	S_{DD21_OFF}	f = 1.35GHz (Figure 2)		-28		dB
LOGIC INPUT (SEL1, SEL2)						
Input Logic-High	V_{IH}		1.4			V
Input Logic-Low	V_{IL}				0.5	V
Input Logic Hysteresis	V_{HYST}			100		mV
Input Leakage Current	I_{IN}	$V_{SEL_}$ = 0V or V_{DD}	-1		+1	µA
POWER SUPPLY						
Power-Supply Range	V_{DD}		3.0		3.6	V
V_{DD} Supply Current	I_{DD}	$V_{SEL_}$ = 0V or V_{DD}		500	850	µA

Note 3: All units are 100% production tested at T_A = +85°C. Limits over the operating temperature range are guaranteed by design and characterization and are not production tested.

Note 4: $\Delta R_{ON} = R_{ON(MAX)} - R_{ON(MIN)}$.

Note 5: Guaranteed by design. Not production tested.

Note 6: Flatness is defined as the difference between the maximum and minimum value of on-resistance as measured over the specified analog signal range.

Test Circuits/Timing Diagrams

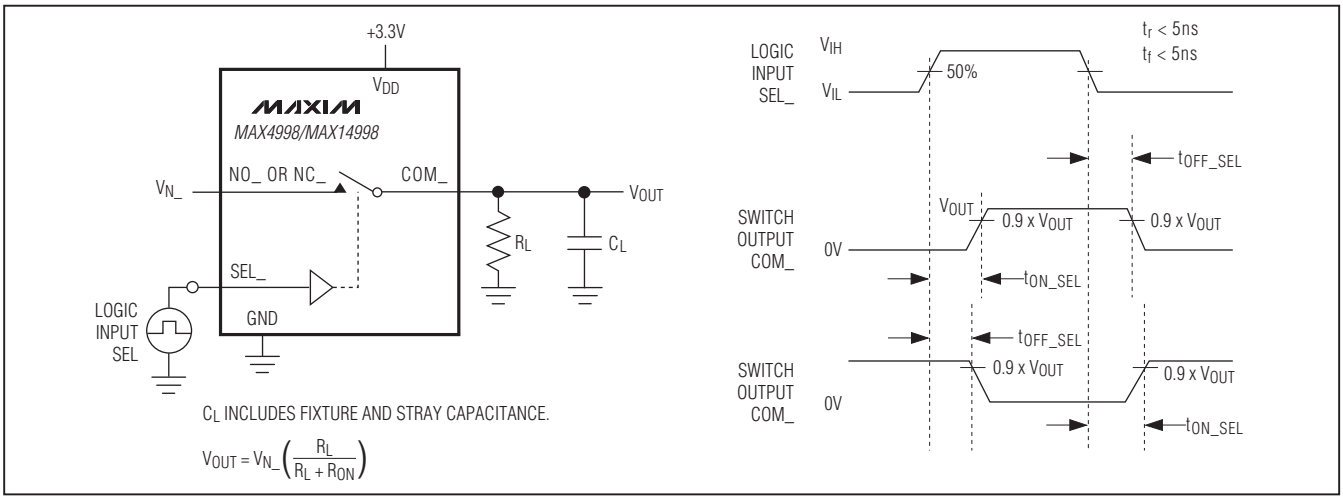

Figure 1. Switching Time

Two-Lane and Four-Lane DisplayPort Passive Switches with Separate AUX/HPD Control

Test Circuits/Timing Diagrams (continued)

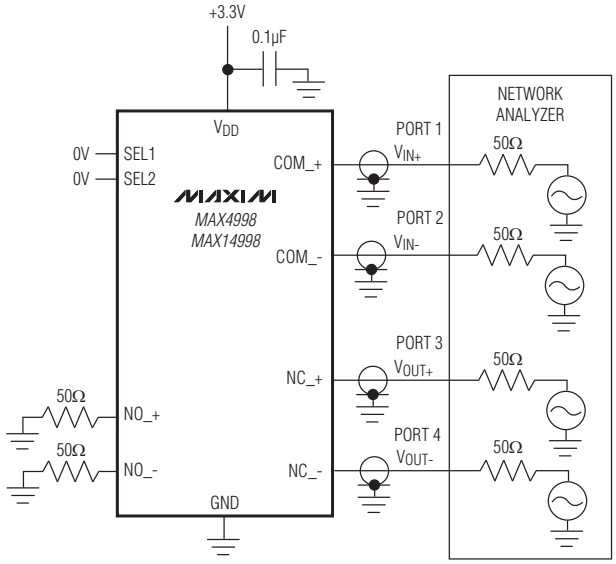

DIFFERENTIAL INSERTION LOSS/DIFFERENTIAL RETURN LOSS

$$\text{DIFFERENTIAL INSERTION LOSS} = 20\log\left(\frac{V_{OUT+} - V_{OUT-}}{V_{IN+} - V_{IN-}}\right)$$

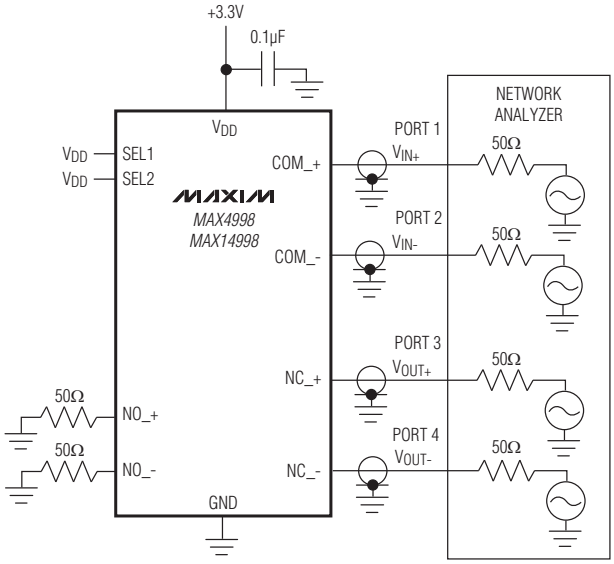

DIFFERENTIAL OFF-ISOLATION

$$\text{DIFFERENTIAL OFF-ISOLATION} = 20\log\left(\frac{V_{OUT+} - V_{OUT-}}{V_{IN+} - V_{IN-}}\right)$$

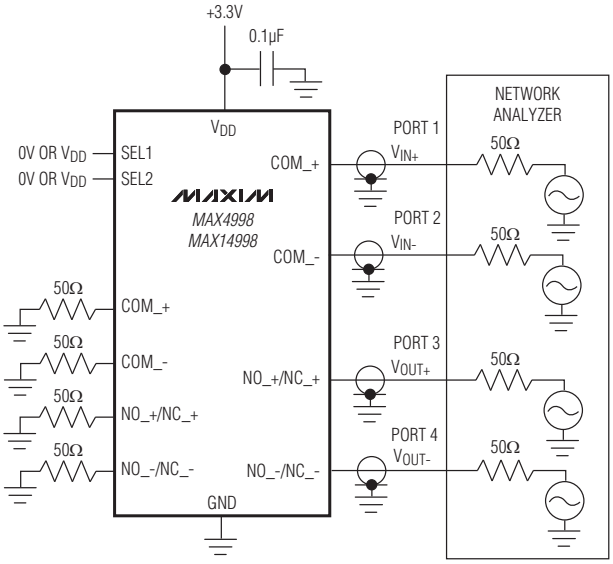

DIFFERENTIAL CROSSTALK

$$\text{DIFFERENTIAL CROSSTALK} = 20\log\left(\frac{V_{OUT+} - V_{OUT-}}{V_{IN+} - V_{IN-}}\right)$$

MEASUREMENTS ARE STANDARDIZED AGAINST SHORTS AT IC TERMINALS.
DIFFERENTIAL OFF-ISOLATION IS MEASURED BETWEEN COM_ AND "OFF" NO_ OR NC_ TERMINAL ON EACH SWITCH.
DIFFERENTIAL ON-LOSS IS MEASURED BETWEEN COM_ AND "ON" NO_ OR NC_ TERMINAL ON EACH SWITCH.
DIFFERENTIAL CROSSTALK IS MEASURED BETWEEN ANY TWO PAIRS.

Figure 2. Differential On-Loss, Differential Off-Isolation, and Differential Crosstalk

Typical Operating Characteristics

(T_A = +25°C, unless otherwise noted.)

ON-RESISTANCE vs. COM_ VOLTAGE

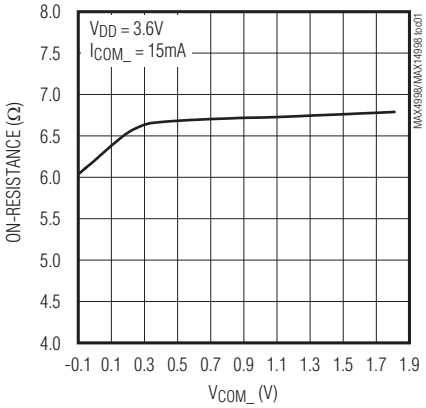

ON-RESISTANCE vs. COM_ VOLTAGE

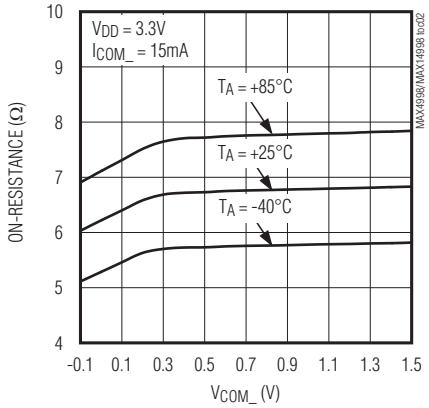

SUPPLY CURRENT vs. TEMPERATURE

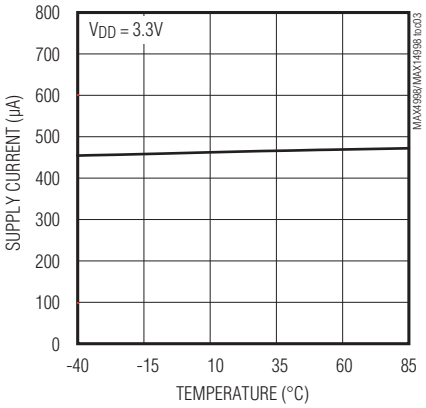

LOGIC THRESHOLD vs. SUPPLY VOLTAGE

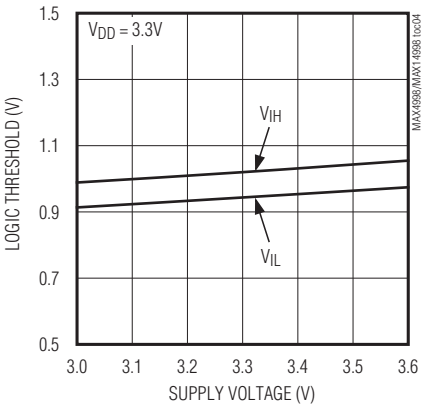

TURN-ON/OFF TIME vs. SUPPLY VOLTAGE

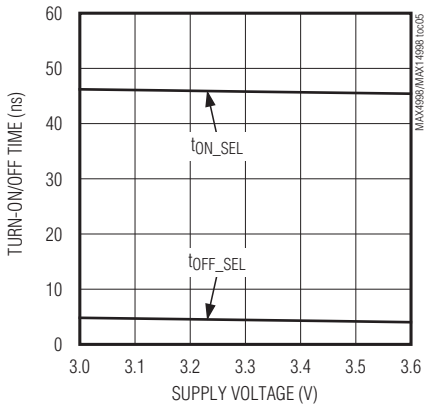

DIFFERENTIAL INSERTION LOSS

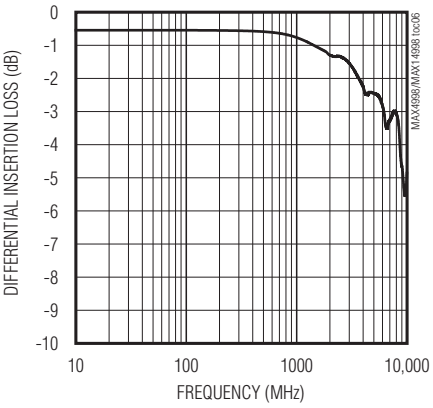

DIFFERENTIAL OFF-ISOLATION

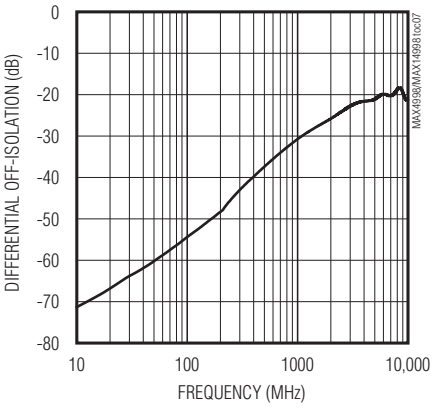

DIFFERENTIAL CROSSTALK

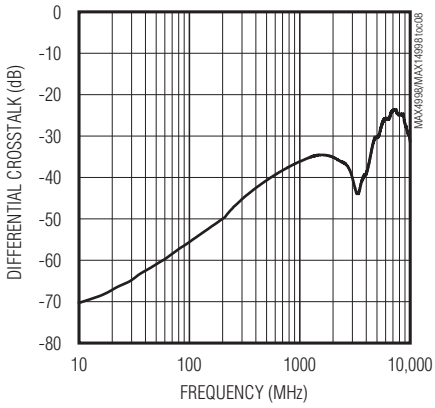

DIFFERENTIAL RETURN LOSS

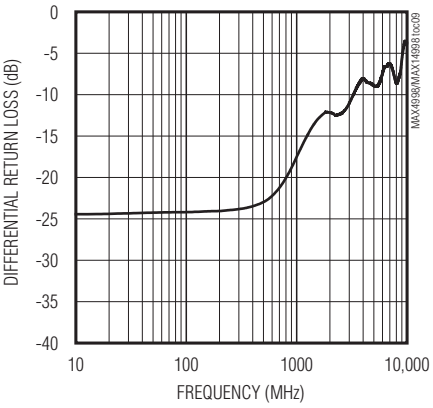

Two-Lane and Four-Lane DisplayPort Passive Switches with Separate AUX/HPD Control

Pin Configurations

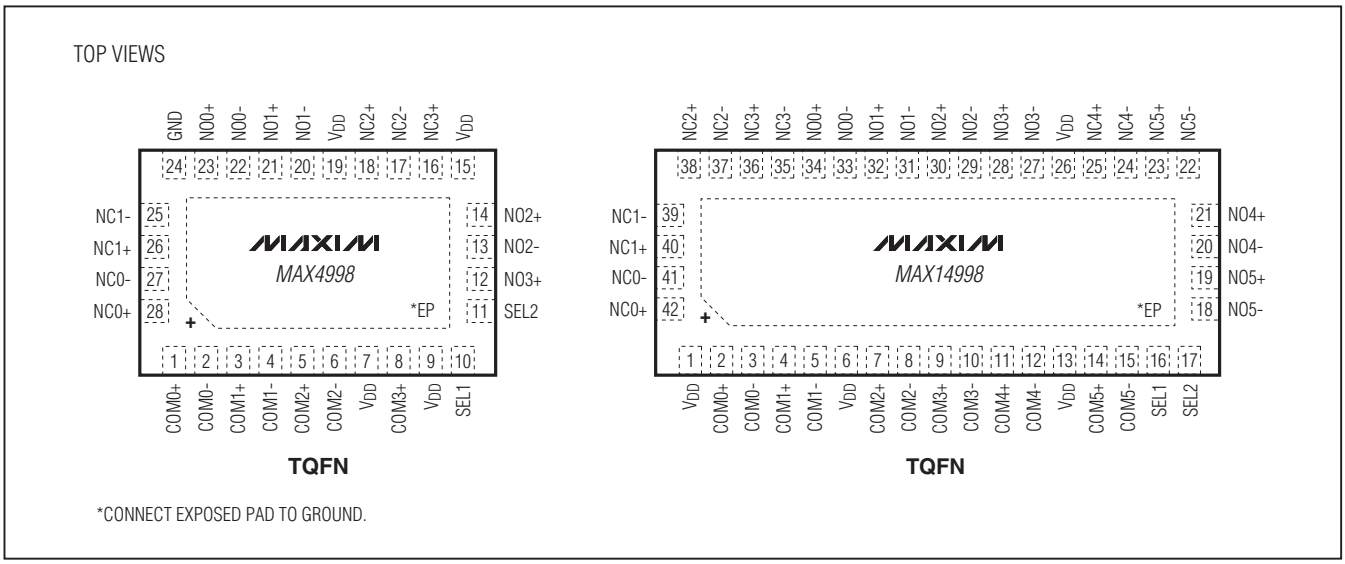

*CONNECT EXPOSED PAD TO GROUND.

Pin Description

PIN		NAME	FUNCTION
MAX4998	MAX14998		
1	2	COM0+	Analog Switch 1. Common positive terminal.
2	3	COM0-	Analog Switch 1. Common negative terminal.
3	4	COM1+	Analog Switch 2. Common positive terminal.
4	5	COM1-	Analog Switch 2. Common negative terminal.
5	7	COM2+	Analog Switch 3. Common positive terminal.
6	8	COM2-	Analog Switch 3. Common negative terminal.
7, 9, 15, 19	1, 6, 13, 26	V_{DD}	Positive Supply Voltage Input. Connect V_{DD} to a +3.0V to +3.6V supply voltage. Bypass V_{DD} to GND with a 0.1µF ceramic capacitor placed as close to the device as possible (see the *Board Layout* section).
8	9	COM3+	Analog Switch 4. Common positive terminal.
10	16	SEL1	Control Signal Input. Selects high-frequency switching.
11	17	SEL2	Control Signal Input. Selects AUX/HPD.
12	28	NO3+	Analog Switch 4. Normally Open positive terminal.
13	29	NO2-	Analog Switch 3. Normally Open negative terminal.
14	30	NO2+	Analog Switch 3. Normally Open positive terminal.
16	36	NC3+	Analog Switch 4. Normally Closed positive terminal.
17	37	NC2-	Analog Switch 3. Normally Closed negative terminal.
18	38	NC2+	Analog Switch 3. Normally Closed positive terminal.
20	31	NO1-	Analog Switch 2. Normally Open negative terminal.
21	32	NO1+	Analog Switch 2. Normally Open positive terminal.
22	33	NO0-	Analog Switch 1. Normally Open negative terminal.

Pin Description (continued)

PIN		NAME	FUNCTION
MAX4998	MAX14998		
23	34	NO0+	Analog Switch 1. Normally Open positive terminal.
24	—	GND	Ground
25	39	NC1-	Analog Switch 2. Normally Closed negative terminal.
26	40	NC1+	Analog Switch 2. Normally Closed positive terminal.
27	41	NC0-	Analog Switch 1. Normally Closed negative terminal.
28	42	NC0+	Analog Switch 1. Normally Closed positive terminal.
—	10	COM3-	Analog Switch 4. Common negative terminal.
—	11	COM4+	Analog Switch 5. Common positive terminal.
—	12	COM4-	Analog Switch 5. Common negative terminal.
—	14	COM5+	Analog Switch 6. Common positive terminal.
—	15	COM5-	Analog Switch 6. Common negative terminal.
—	18	NO5-	Analog Switch 6. Normally Open negative terminal.
—	19	NO5+	Analog Switch 6. Normally Open positive terminal.
—	20	NO4-	Analog Switch 5. Normally Open negative terminal.
—	21	NO4+	Analog Switch 5. Normally Open positive terminal.
—	22	NC5-	Analog Switch 6. Normally Closed negative terminal.
—	23	NC5+	Analog Switch 6. Normally Closed positive terminal.
—	24	NC4-	Analog Switch 5. Normally Closed negative terminal.
—	25	NC4+	Analog Switch 5. Normally Closed positive terminal.
—	27	NO3-	Analog Switch 4. Normally Open negative terminal.
—	35	NC3-	Analog Switch 4. Normally Closed negative terminal.
—	—	EP	Exposed Pad. Internally connected to GND. Connect to a large plane to maximize thermal performance. Not intended as an electrical part.

Detailed Description

The MAX4998/MAX14998 high-speed passive switches route one DisplayPort source between two possible destinations or vice versa. The MAX4998 is used to switch two-lanes plus AUX/HPD DisplayPort, and the MAX14998 is used to switch four-lanes plus AUX/HPD DisplayPort.

The MAX4998/MAX14998 feature two digital control inputs (SEL1, SEL2) to switch signal paths.

Digital Control Inputs (SEL1, SEL2)

The MAX4998/MAX14998 provide two digital control inputs (SEL1, SEL2) to select the signal path between the COM_ and NO_/NC_ channels. SEL1 selects high-frequency switching, while SEL2 selects AUX/HPD. On the MAX4998, switches 1 and 2 are high-frequency switches and switches 3 and 4 are both low-frequency switches. On the MAX14998, switches 1, 2, 3, and 4 are high-frequency switches and switches 5 and 6 are low-frequency switches. The truth tables for the MAX4998/MAX14998 are depicted in the *Functional Diagrams/Truth Tables*. Drive SEL_ 0V to V_{DD} to minimize power consumption.

Analog Signal Levels

The MAX4998/MAX14998 accept standard DisplayPort signals to a maximum of (V_{DD} - 1.8V). Signals on the COM_+ channels are routed to either the NO_+ or NC_+ channels. Signals on the COM_- channels are routed to either the NO_- or NC_- channels. The MAX4998/MAX14998 are bidirectional switches, allowing COM_, NO_, and NC_, to be used as either inputs or outputs.

Two-Lane and Four-Lane DisplayPort Passive Switches with Separate AUX/HPD Control

Functional Diagrams/Truth Tables

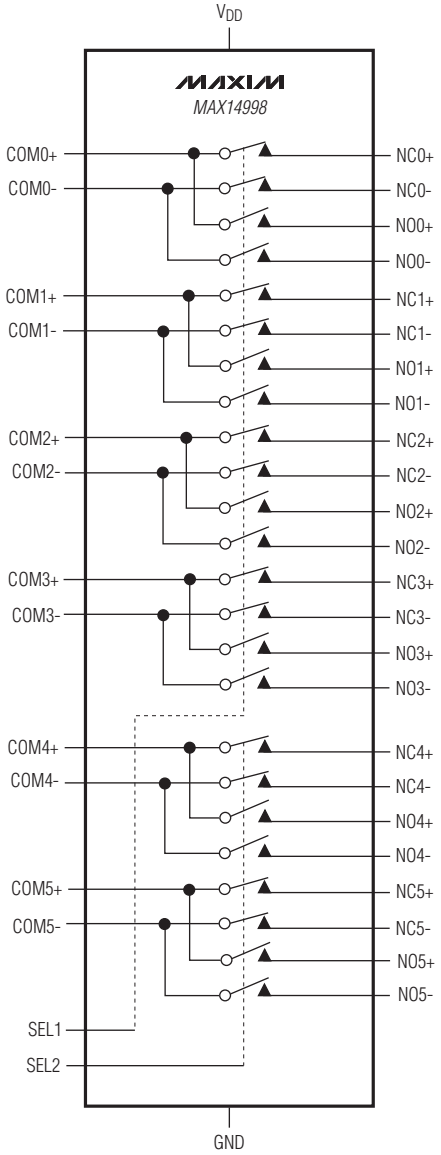

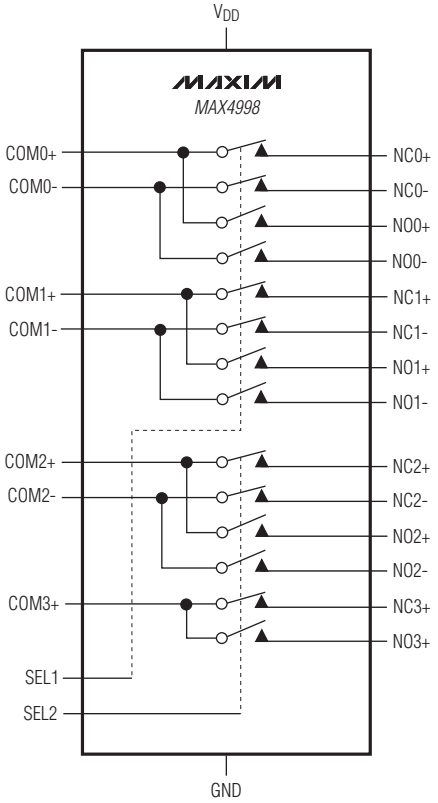

SEL1	EVENT	SWITCH
0	COM_ TO NC_	1, 2, 3, 4
1	COM_ TO NO_	1, 2, 3, 4

SEL2	EVENT	SWITCH
0	COM_ TO NC_	5, 6
1	COM_ TO NO_	5, 6

SEL1	EVENT	SWITCH
0	COM_ TO NC_	1, 2
1	COM_ TO NO_	1, 2

SEL2	EVENT	SWITCH
0	COM_ TO NC_	3, 4
1	COM_ TO NO_	3, 4

Typical Operating Circuit

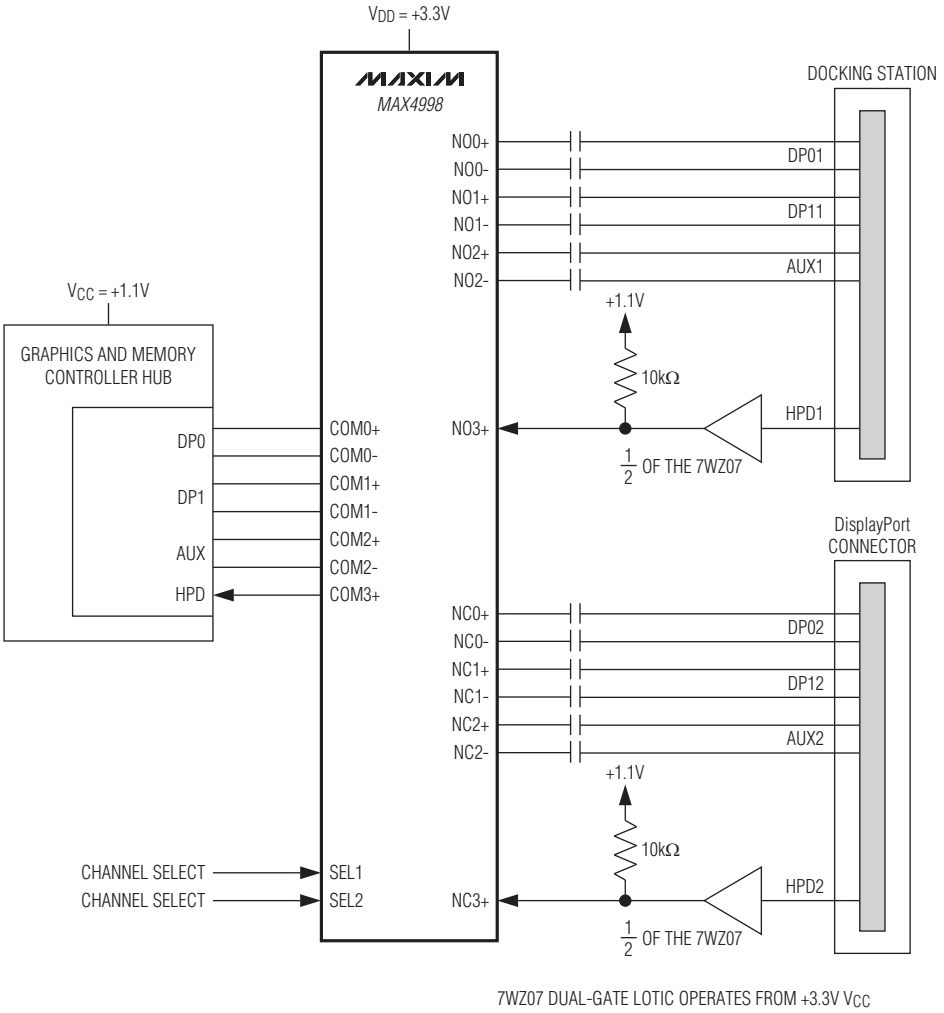

NOTE: THE APPLICATION SHOWN IS A TWO-LANE SWITCH BETWEEN THE DOCKING STATION AND DisplayPort CONNECTOR ON A LAPTOP. SEL2 NEEDS TO BE CHANGED FIRST WHEN SWITCHING SO THAT THE AUX/HPD SIGNAL CAN ESTABLISH CONTACT AND SET PARAMETERS THROUGH DDC. THE HPD SIGNALS FROM THE DOCKING STATION AND DP CONNECTOR NEED TO BE INPUT THROUGH A LEVEL TRANSLATOR, SUCH AS A 7WZ07 OR 742G07 NONINVERTING TO THE MAX4998. EACH OUTPUT IS PULLED UP TO MATCH THE LOGIC LEVEL OF THE GMCH. THE COM SIDE OF THE MAX4998 NEEDS TO BE CONNECTED DIRECTLY TO THE GMCH, RUNNING AT LOW VOLTAGE (APPROXIMATELY 1.1V). THIS ESTABLISHES THE COMMON-MODE VOLTAGE FOR THE SWITCH AND KEEPS THE SWITCH WITHIN ITS OPTIMAL RANGE. IF A FOUR-LANE DisplayPort SWITCH IS DESIRED, THE MAX14998 SHOULD BE USED. THE CIRCUIT IS THE SAME EXCEPT THAT DP0 TO DP3 IS USED WITH AUX, AND THE HPD CIRCUITRY IS THE SAME.

Two-Lane and Four-Lane DisplayPort Passive Switches with Separate AUX/HPD Control

Applications Information

Board Layout

High-speed switches require proper layout and design procedures for optimum performance. Keep design-controlled impedance PCB traces as short as possible. Ensure that power-supply bypass capacitors are placed as close to the device as possible. Multiple bypass capacitors are recommended. Connect all grounds and the exposed pad to large ground planes.

Chip Information

PROCESS: CMOS

Package Information

For the latest package outline information and land patterns, go to **www.maxim-ic.com/packages**. Note that a "+", "#", or "-" in the package code indicates RoHS status only. Package drawings may show a different suffix character, but the drawing pertains to the package regardless of RoHS status.

PACKAGE TYPE	PACKAGE CODE	OUTLINE NO.	LAND PATTERN NO.
28 TQFN-EP	T283555+1	**21-0184**	**90-0123**
42 TQFN-EP	T423590+1	**21-0181**	**90-0078**

Revision History

REVISION NUMBER	REVISION DATE	DESCRIPTION	PAGES CHANGED
0	10/09	Initial release	—
1	8/10	Removed future status from the MAX14998 in the *Ordering Information* table; changed the bandwidth to 8.5GHz (typ) in the *Features* section; changed the return loss to -13dB at 2.7GHz in the *Features* section; added sub-bullets describing the DisplayPort signals v1.1 and v1.2 to the *Features* section	1

Maxim cannot assume responsibility for use of any circuitry other than circuitry entirely embodied in a Maxim product. No circuit patent licenses are implied. Maxim reserves the right to change the circuitry and specifications without notice at any time.

© 2010 Maxim Integrated Products Maxim is a registered trademark of Maxim Integrated Products, Inc.

AMEYA360
Components Supply Platform

Authorized Distribution Brand :

Website :

Welcome to visit www.ameya360.com

Contact Us :

- ## Address :

401 Building No.5, JiuGe Business Center, Lane 2301, Yishan Rd
Minhang District, Shanghai , China

- ## Sales :

Direct +86 (21) 6401-6692

Email amall@ameya360.com

QQ 800077892

Skype ameyasales1 ameyasales2

- ## Customer Service :

Email service@ameya360.com

- ## Partnership :

Tel +86 (21) 64016692-8333

Email mkt@ameya360.com