TLC59116 16-Channel FM+ I²C-Bus Constant-Current LED Sink Driver

1 Features

- 16 LED Drivers (Each Output Programmable at Off, On, Programmable LED Brightness, or Programmable Group Dimming and Blinking Mixed With Individual LED Brightness)
- 16 Constant-Current Output Channels
- 256-Step (8-Bit) Linear Programmable Brightness Per LED Output Varying From Fully Off (Default) to Maximum Brightness Using a 97-kHz PWM Signal
- 256-Step Group Brightness Control Allows General Dimming [Using a 190-Hz PWM Signal From Fully Off to Maximum Brightness (Default)]
- 256-Step Group Blinking With Frequency Programmable From 24 Hz to 10.73 s and Duty Cycle From 0% to 99.6%
- Four Hardware Address Pins Allow 14 TLC59116 Devices to Be Connected to Same I²C Bus
- Four Software-Programmable I²C Bus Addresses (One LED Group Call Address and Three LED Sub Call Addresses) Allow Groups of Devices to Be Addressed at Same Time in Any Combination
- Software Reset Feature (SWRST Call) Allows Device to Be Reset Through I²C Bus
- Up to 14 Possible Hardware-Adjustable Individual I²C Bus Addresses Per Device, So That Each Device Can Be Programmed
- Open-Load and Overtemperature Detection Mode to Detect Individual LED Errors
- Output State Change Programmable on Acknowledge or Stop Command to Update Outputs Byte-by-Byte or All at Same Time (Default to Change on Stop)
- Output Current Adjusted Through an External Resistor
- Constant Output Current Range: 5 mA to 120 mA
- Maximum Output Voltage: 17 V
- 25-MHz Internal Oscillator Requires No External Components
- 1-MHz Fast-mode Plus (FMT) Compatible I²C Bus Interface With 30-mA High-Drive Capability on SDA Output for Driving High-Capacitive Buses
- Internal Power-On Reset
- Noise Filter on SCL and SDA Inputs
- No Glitch on Power-Up
- Active-Low Reset
- Supports Hot Insertion
- Low Standby Current
- 3.3-V or 5-V Supply Voltage
- 5.5-V Tolerant Inputs
- Offered in 28-Pin Thin Shrink Small-Outline Package (TSSOP) (PW) and 32-Pin Quad Flatpack No Lead (QFN)
- –40 °C to 85 °C Operation

2 Applications

- Gaming
- Small Signage
- Industrial Equipment

3 Description

The TLC59116 is an I²C bus controlled 16-channel LED driver that is optimized for red/green/blue/amber (RGBA) color mixing and backlight application. Each LED output has its own 8-bit resolution (256 steps) fixed-frequency individual PWM controller that operates at 97 kHz, with a duty cycle that is adjustable from 0% to 99.6%.

Device Information(1)

PART NUMBER	PACKAGE	BODY SIZE (NOM)
TLC59116	TSSOP (28)	9.70 mm × 4.40 mm
	VQFN (32)	5.00 mm × 5.00 mm

(1) For all available packages, see the orderable addendum at the end of the datasheet.

TLC59116 Typical Application

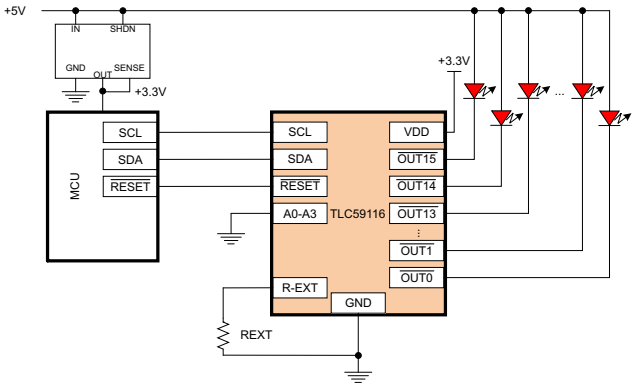

An IMPORTANT NOTICE at the end of this data sheet addresses availability, warranty, changes, use in safety-critical applications, intellectual property matters and other important disclaimers. PRODUCTION DATA.

Table of Contents

1 Features ... 1
2 Applications ... 1
3 Description ... 1
4 Revision History ... 2
5 Description (continued) ... 3
6 Pin Configuration and Functions ... 4
7 Specifications ... 6
7.1 Absolute Maximum Ratings ... 6
7.2 Handling Ratings ... 6
7.3 Recommended Operating Conditions ... 6
7.4 Thermal Information ... 6
7.5 Electrical Characteristics ... 7
7.6 Timing Requirements ... 8
7.7 Typical Characteristics ... 9
8 Parameter Measurement Information ... 10
9 Detailed Description ... 12
9.1 Overview ... 12
9.2 Functional Block Diagram ... 12
9.3 Feature Description ... 12
9.4 Device Functional Modes ... 15
9.5 Register Maps ... 15
10 Application and Implementation ... 23
10.1 Application Information ... 23
10.2 Typical Application ... 28
11 Power Supply Recommendations ... 30
12 Layout ... 30
12.1 Layout Guidelines ... 30
12.2 Layout Example ... 30
12.3 Thermal Considerations ... 31
13 Device and Documentation Support ... 32
13.1 Trademarks ... 32
13.2 Electrostatic Discharge Caution ... 32
13.3 Glossary ... 32
14 Mechanical, Packaging, and Orderable Information ... 32

4 Revision History

NOTE: Page numbers for previous revisions may differ from page numbers in the current version.

Changes from Revision D (June 2011) to Revision E	Page
• Added *Pin Configuration and Functions* section, *ESD Ratings* table, *Feature Description* section, *Device Functional Modes*, *Application and Implementation* section, *Power Supply Recommendations* section, *Layout* section, *Device and Documentation Support* section, and *Mechanical, Packaging, and Orderable Information* section	1

Changes from Revision C (June 2010) to Revision D	Page
• Added Output Current vs Output Voltage Figure.	9
• Changed "SLEEP" to "OSC" in Mode Register 1 (MODE1) Table.	16
• Added Bits 6 and 4 to the Mode Register 2 Bit Description Table.	16
• Changed VALUES column in the Mode Register 2 Bit Description Table.	16

Copyright © 2008–2014, Texas Instruments Incorporated

5 Description (continued)

The individual PWM controller allows each LED to be set to a specific brightness value. An additional 8-bit resolution (256 steps) group PWM controller has both a fixed frequency of 190 Hz and an adjustable frequency between 24 Hz to once every 10.73 seconds, with a duty cycle that is adjustable from 0% to 99.6%. The group PWM controller dims or blinks all LEDs with the same value.

Each LED output can be off, on (no PWM control), or set at its individual PWM controller value at both individual and group PWM controller values.

The TLC59116 operates with a supply voltage range of 3 V to 5.5 V and the outputs are 17 V tolerant. LEDs can be directly connected to the TLC59116 device outputs.

Software programmable LED Group and three Sub Call I^2C-bus addresses allow all or defined groups of TLC59116 devices to respond to a common I^2C-bus address, allowing for example, all the same color LEDs to be turned on or off at the same time or marquee chasing effect, thus minimizing I^2C-bus commands.

Four hardware address pins allow up to 14 devices on the same bus.

The Software Reset (SWRST) Call allows the master to perform a reset of the TLC59116 through the I^2C-bus, identical to the Power-On Reset (POR) that initializes the registers to their default state causing the outputs to be set high (LED off). This allows an easy and quick way to reconfigure all device registers to the same condition.

Copyright © 2008–2014, Texas Instruments Incorporated

6 Pin Configuration and Functions

PW PACKAGE
(TOP VIEW)

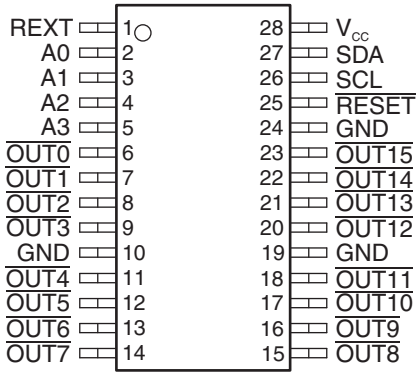

RHB PACKAGE
(TOP VIEW)

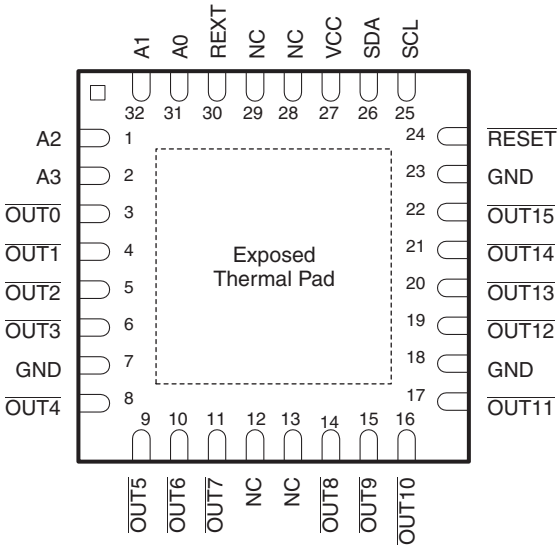

NC - No internal connection
If used, the exposed thermal pad must be connected as a secondary ground.

Pin Functions

PIN			I/O(1)	DESCRIPTION
NAME	PW NO.	RHB NO.		
REXT	1	30	I	Input terminal used to connect an external resistor for setting up all output currents
A0	2	31	I	Address input 0
A1	3	32	I	Address input 1
A2	4	1	I	Address input 2
A3	5	2	I	Address input 3
$\overline{\text{OUT0}}$	6	3	O	Constant current output 0
$\overline{\text{OUT1}}$	7	4	O	Constant current output 1
$\overline{\text{OUT2}}$	8	5	O	Constant current output 2
$\overline{\text{OUT3}}$	9	6	O	Constant current output 3
GND	10	7		Ground

(1) I = input, O = output

Copyright © 2008–2014, Texas Instruments Incorporated

Pin Functions (continued)

PIN			I/O[1]	DESCRIPTION
NAME	PW NO.	RHB NO.		
$\overline{OUT4}$	11	8	O	Constant current output 4
$\overline{OUT5}$	12	9	O	Constant current output 5
$\overline{OUT6}$	13	10	O	Constant current output 6
$\overline{OUT7}$	14	11	O	Constant current output 7
$\overline{OUT8}$	15	14	O	Constant current output 8
$\overline{OUT9}$	16	15	O	Constant current output 9
$\overline{OUT10}$	17	16	O	Constant current output 10
$\overline{OUT11}$	18	17	O	Constant current output 11
GND	19	18		Ground
$\overline{OUT12}$	20	19	O	Constant current output 12
$\overline{OUT13}$	21	20	O	Constant current output 13
$\overline{OUT14}$	22	21	O	Constant current output 14
$\overline{OUT15}$	23	22	O	Constant current output 15
GND	24	23		Ground
$\overline{RESET}$	25	24	I	Active-low reset input
SCL	26	25	I	Serial clock input
SDA	27	26	I/O	Serial data input/output
V_{CC}	28	27	—	Power supply
NC	—	12, 13, 28, 29	—	No internal connection

Copyright © 2008–2014, Texas Instruments Incorporated

7 Specifications

7.1 Absolute Maximum Ratings

over operating free-air temperature (unless otherwise noted)[1]

		MIN	MAX	UNIT
V_{CC}	Supply voltage	0	7	V
V_I	Input voltage	–0.4	V_{CC} + 0.4	V
V_O	Output voltage	–0.5	20	V
I_O	Output current per channel		120	mA
T_J	Junction temperature	–40	150	°C

(1) Stresses beyond those listed under *Absolute Maximum Ratings* may cause permanent damage to the device. These are stress ratings only, which do not imply functional operation of the device at these or any other conditions beyond those indicated under *Recommended Operating Conditions*. Exposure to absolute-maximum-rated conditions for extended periods may affect device reliability.

7.2 Handling Ratings

			MIN	MAX	UNIT
T_{stg}	Storage temperature range		–55	150	°C
$V_{(ESD)}$	Electrostatic discharge	Human body model (HBM), per ANSI/ESDA/JEDEC JS-001, all pins[1]		1500	V
		Charged device model (CDM), per JEDEC specification JESD22-C101, all pins[2]		500	

(1) JEDEC document JEP155 states that 500-V HBM allows safe manufacturing with a standard ESD control process.
(2) JEDEC document JEP157 states that 250-V CDM allows safe manufacturing with a standard ESD control process.

7.3 Recommended Operating Conditions

All unused inputs of the device must be held at V_{CC} or GND to ensure proper device operation

				MIN	MAX	UNIT
V_{CC}	Supply voltage			3	5.5	V
V_{IH}	High-level input voltage	SCL, SDA, $\overline{RESET}$, A0, A1, A2, A3		0.7 × V_{CC}	V_{CC}	V
V_{IL}	Low-level input voltage	SCL, SDA, $\overline{RESET}$, A0, A1, A2, A3		0	0.3 × V_{CC}	V
V_O	Supply voltage to output pins	$\overline{OUT0}$ to $\overline{OUT15}$			17	V
I_{OL}	Low-level output current sink	SDA	V_{CC} = 3 V		20	mA
			V_{CC} = 5 V		30	
I_O	Output current per channel	$\overline{OUT0}$ to $\overline{OUT15}$		5	120	mA
T_A	Operating free-air temperature			–40	85	°C

7.4 Thermal Information

THERMAL METRIC[1]		TLC59116		UNIT
		PW	RHB	
		28 PINS	32 PINS	
$R_{\theta JA}$	Junction-to-ambient thermal resistance	78	34.3	°C/W
$R_{\theta JC(top)}$	Junction-to-case (top) thermal resistance	18.8	26.3	
$R_{\theta JB}$	Junction-to-board thermal resistance	36	8.3	
ψ_{JT}	Junction-to-top characterization parameter	0.5	0.4	
ψ_{JB}	Junction-to-board characterization parameter	35.5	8.2	
$R_{\theta JC(bot)}$	Junction-to-case (bottom) thermal resistance	n/a	3.3	

(1) For more information about traditional and new thermal metrics, see the *IC Package Thermal Metrics* application report, SPRA953.

Copyright © 2008–2014, Texas Instruments Incorporated

7.5 Electrical Characteristics

V_{CC} = 3 V to 5.5 V, T_A = –40 °C to 85 °C (unless otherwise noted)

PARAMETER			TEST CONDITIONS		MIN	TYP(1)	MAX	UNIT
I_I	Input / output leakage current	SCL, SDA, A0, A1, A2, A3, $\overline{RESET}$	$V_I = V_{CC}$ or GND				±0.3	µA
	Output leakage current	$\overline{OUT0}$ to $\overline{OUT15}$	V_O = 17 V, T_J = 25°C				0.5	µA
V_{POR}	Power-on reset voltage					2.5		V
I_{OL}	Low-level output current	SDA	V_{CC} = 3 V, V_{OL} = 0.4 V		20			mA
			V_{CC} = 5 V, V_{OL} = 0.4 V		30			
$I_{O(1)}$	Output current 1	$\overline{OUT0}$ to $\overline{OUT15}$	V_O = 0.6 V, R_{ext} = 720 Ω, CG = 0.992(2)			26		mA
	Output current error	$\overline{OUT0}$ to $\overline{OUT15}$	I_O = 26 mA, V_O = 0.6 V, R_{ext} = 720 Ω, T_J = 25°C				±8%	
	Output channel to channel current error	$\overline{OUT0}$ to $\overline{OUT15}$	I_O = 26 mA, V_O = 0.6 V, R_{ext} = 720 Ω, T_J = 25°C				±6%	
$I_{O(2)}$	Output current 2	$\overline{OUT0}$ to $\overline{OUT15}$	V_O = 0.8 V, R_{ext} = 360 Ω, CG = 0.992(2)			52		mA
	Output current error	$\overline{OUT0}$ to $\overline{OUT15}$	I_O = 52 mA, V_O = 0.8 V, R_{ext} = 360 Ω, T_J = 25°C				±8%	
	Output channel to channel current error	$\overline{OUT0}$ to $\overline{OUT15}$	I_O = 52 mA, V_O = 0.8 V, R_{ext} = 360 Ω, T_J = 25°C				±6%	
I_{OUT} vs V_{OUT}	Output current vs output voltage regulation	$\overline{OUT0}$ to $\overline{OUT15}$	V_O = 1 V to 3 V, I_O = 26 mA			±0.1		%/V
			V_O = 3 V to 5.5 V, I_O = 26 mA to 120 mA			±1		
$I_{OUT,Th1}$	Threshold current 1 for error detection	$\overline{OUT0}$ to $\overline{OUT15}$	$I_{OUT,target}$ = 26 mA			0.5 × I_{TARGET}%		
$I_{OUT,Th2}$	Threshold current 2 for error detection	$\overline{OUT0}$ to $\overline{OUT15}$	$I_{OUT,target}$ = 52 mA			0.5 × I_{TARGET}%		
$I_{OUT,Th3}$	Threshold current 3 for error detection	$\overline{OUT0}$ to $\overline{OUT15}$	$I_{OUT,target}$ = 104 mA			0.5 × I_{TARGET}%		
T_{SD}	Overtemperature shutdown(3)				150	175	200	°C
T_{HYS}	Restart hysteresis					15		°C
C_i	Input capacitance	SCL, A0, A1, A2, A3, $\overline{RESET}$	$V_I = V_{CC}$ or GND			5		pF
C_{io}	Input / output capacitance	SDA	$V_I = V_{CC}$ or GND			8		pF
I_{CC}	Supply current		V_{CC} = 5.5 V	$\overline{OUT0}$ to $\overline{OUT15}$ = OFF, R_{ext} = Open			25	mA
				$\overline{OUT0}$ to $\overline{OUT15}$ = OFF, R_{ext} = 720 Ω			29	
				$\overline{OUT0}$ to $\overline{OUT15}$ = OFF, R_{ext} = 360 Ω			32	
				$\overline{OUT0}$ to $\overline{OUT15}$ = OFF, R_{ext} = 180 Ω			37	
				$\overline{OUT0}$ to $\overline{OUT15}$ = ON, R_{ext} = 720 Ω			29	
				$\overline{OUT0}$ to $\overline{OUT15}$ = ON, R_{ext} = 360 Ω			32	
				$\overline{OUT0}$ to $\overline{OUT15}$ = ON, R_{ext} = 180 Ω			37	

(1) All typical values are at T_A = 25 °C.
(2) CG is the Current Gain and is defined in Table 12.
(3) Specified by design

7.6 Timing Requirements

T_A = –40 °C to 85 °C

		STANDARD MODE I²C BUS		FAST MODE I²C BUS		FAST MODE PLUS I²C BUS		UNIT
		MIN	MAX	MIN	MAX	MIN	MAX	
I²C INTERFACE								
f_{SCL}	SCL clock frequency(1)	0	100	0	400	0	1000	kHz
t_{BUF}	I²C bus free time between Stop and Start conditions	4.7		1.3		0.5		µs
$t_{HD;STA}$	Hold time (repeated) Start condition	4		0.6		0.26		µs
$t_{SU;STA}$	Set-up time for a repeated Start condition	4.7		0.6		0.26		µs
$t_{SU;STO}$	Set-up time for Stop condition	4		0.6		0.26		µs
$t_{HD;DAT}$	Data hold time	0		0		0		ns
$t_{VD;ACK}$	Data valid acknowledge time(2)	0.3	3.45	0.1	0.9	0.05	0.45	µs
$t_{VD;DAT}$	Data valid time(3)	0.3	3.45	0.1	0.9	0.05	0.45	µs
$t_{SU;DAT}$	Data set-up time	250		100		50		ns
t_{LOW}	Low period of SCL clock	4.7		1.3		0.5		µs
t_{HIGH}	High period of SCL clock	4		0.6		0.26		µs
t_f	Fall time of both SDA and SCL signals(4) (5)		300	$20+0.1C_b$ (6)	300		120	ns
t_r	Rise time of both SDA and SCL signals		1000	$20+0.1C_b$ (6)	300		120	ns
t_{SP}	Pulse width of spikes that must be suppressed by the input filter(7)		50		50		50	ns
RESET								
t_W	Reset pulse width	10		10		10		ns
t_{REC}	Reset recovery time	0		0		0		ns
t_{RESET}	Time to reset(8)(9)	400		400		400		ns

(1) Minimum SCL clock frequency is limited by the bus time-out feature, which resets the serial bus interface if either SDA or SCL is held low for a minimum of 25 ms. Disable bus time-out feature for dc operation.
(2) $t_{VD;ACK}$ = time for ACK signal from SCL low to SDA (out) low.
(3) $t_{VD;DAT}$ = minimum time for SDA data out to be valid following SCL low.
(4) A master device must internally provide a hold time of at least 300 ns for the SDA signal (refer to the V_{IL} of the SCL signal) in order to bridge the undefined region of the SCL falling edge.
(5) The maximum t_f for the SDA and SCL bus lines is specified at 300 ns. The maximum fall time (t_f) for the SDA output stage is specified at 250 ns. This allows series protection resistors to be connected between the SDA and the SCL pins and the SDA/SCL bus lines without exceeding the maximum specified t_f.
(6) C_b = Total capacitance of one bus line in pF
(7) Input filters on the SDA and SCL inputs suppress noise spikes less than 50 ns.
(8) Resetting the device while actively communicating on the bus may cause glitches or errant Stop conditions.
(9) Upon reset, the full delay will be the sum of t_{RESET} and the RC time constant of the SDA bus.

Copyright © 2008–2014, Texas Instruments Incorporated

7.7 Typical Characteristics

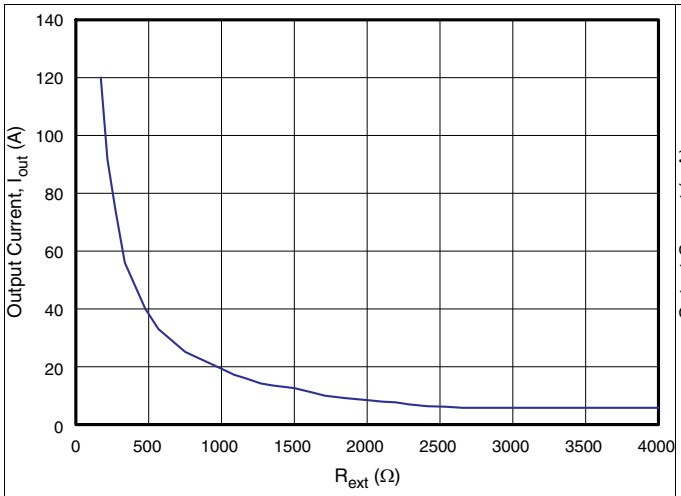

Figure 1. $I_{OUT,target}$ vs R_{ext}

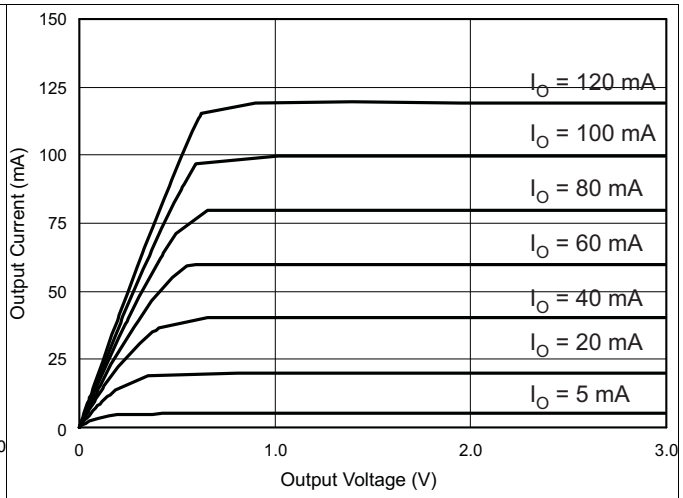

Figure 2. Output Current vs Output Voltage

8 Parameter Measurement Information

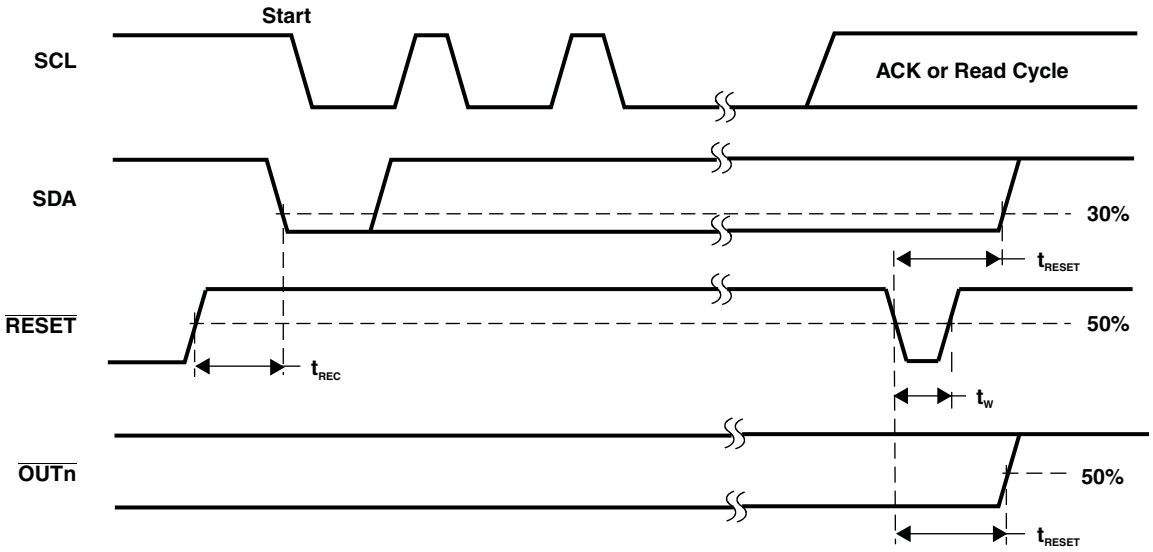

Figure 3. Reset Timing

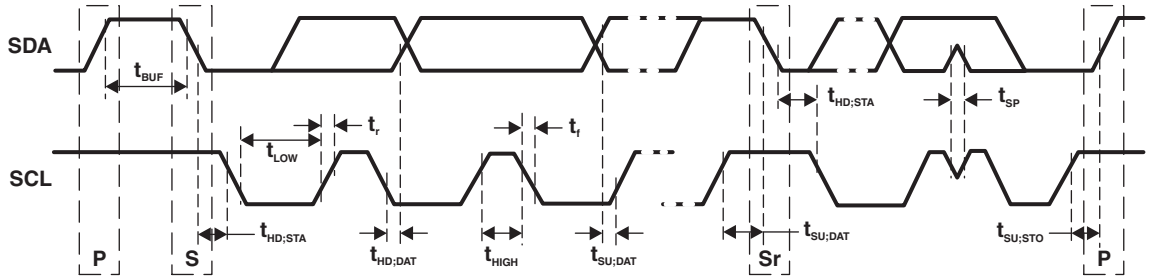

Figure 4. Definition of Timing

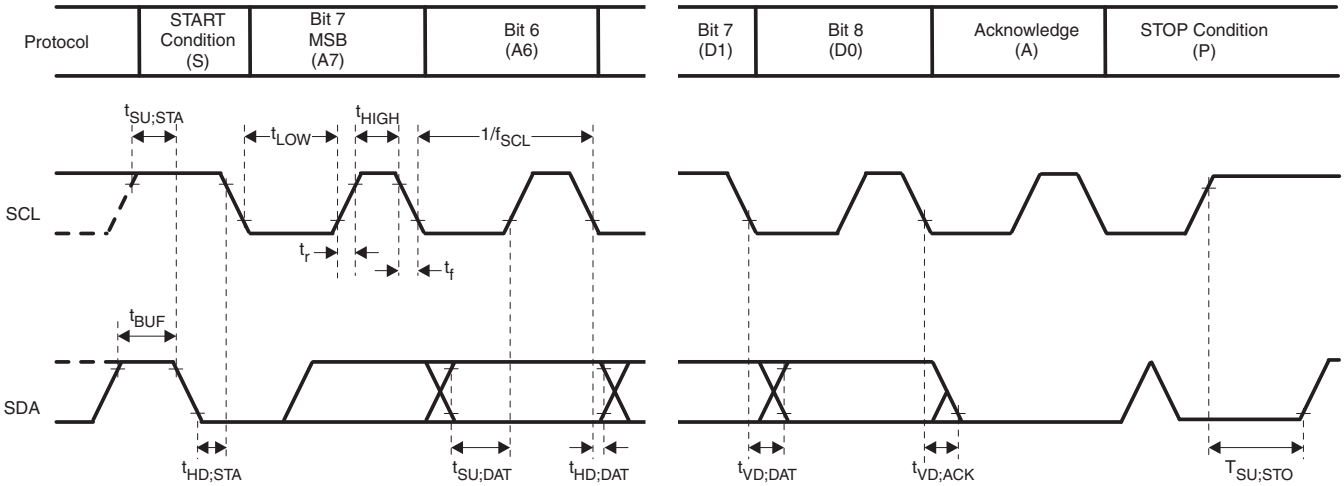

NOTE: Rise and fall times refer to V_{IL} and V_{IH}.

Figure 5. I²C Bus Timing

Copyright © 2008–2014, Texas Instruments Incorporated

Parameter Measurement Information (continued)

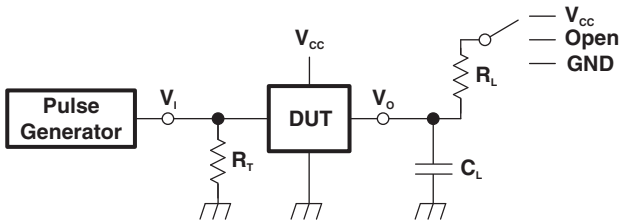

NOTE:

- R_L = Load resistance for SDA and SCL; should be >1 kΩ at 3-mA or lower current
- C_L = Load capacitance; includes jig and probe capacitance
- R_T = Termination resistance; should be equal to the output impedance (Z_O) of the pulse generator

Figure 6. Test Circuit for Switching Characteristics

9 Detailed Description

9.1 Overview

The TLC59116 is an I²C bus controlled 16-channel LED driver that is optimized for red/green/blue/amber (RGBA) color mixing and backlight application. Each LED output has its own 8-bit resolution (256 steps) fixed-frequency individual PWM controller that operates at 97 kHz, with a duty cycle that is adjustable from 0% to 99.6%. The individual PWM controller allows each LED to be set to a specific brightness value. An additional 8-bit resolution (256 steps) group PWM controller has both a fixed frequency of 190 Hz and an adjustable frequency between 24 Hz to once every 10.73 seconds, with a duty cycle that is adjustable from 0% to 99.6%. The group PWM controller dims or blinks all LEDs with the same value.

9.2 Functional Block Diagram

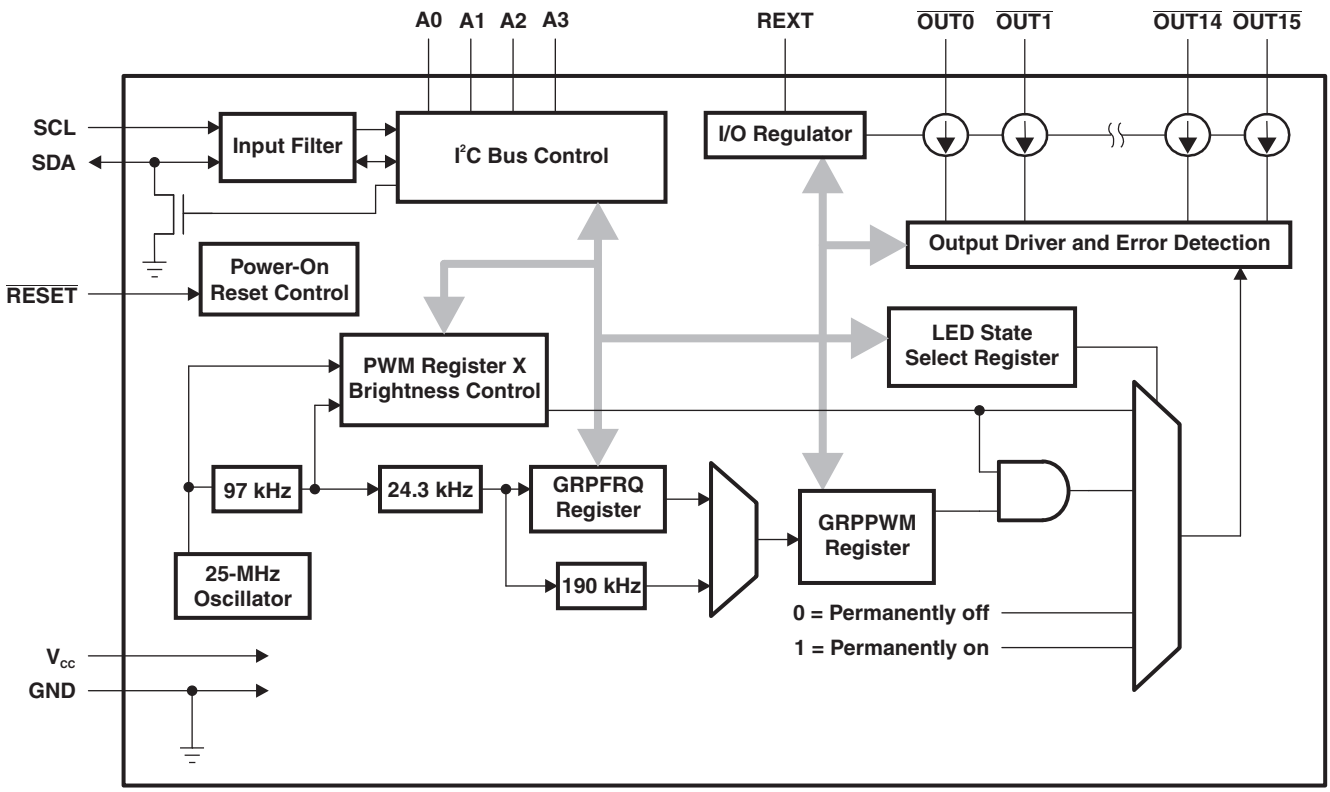

9.3 Feature Description

9.3.1 Open-Circuit Detection

The TLC59116 LED open-circuit detection compares the effective current level I_{OUT} with the open load detection threshold current $I_{OUT,Th}$. If I_{OUT} is below the threshold $I_{OUT,Th}$ the TLC59116 detects an open load condition. This error status can be read out as an error flag through the registers EFLAG1 and EFLAG2.

For open-circuit error detection, a channel must be on and the PWM must be off.

Table 1. Open-Circuit Detection

STATE OF OUTPUT PORT	CONDITION OF OUTPUT CURRENT	ERROR STATUS CODE	MEANING
Off	I_{OUT} = 0 mA	0	Detection not possible

Copyright © 2008–2014, Texas Instruments Incorporated

Feature Description (continued)

Table 1. Open-Circuit Detection (continued)

STATE OF OUTPUT PORT	CONDITION OF OUTPUT CURRENT	ERROR STATUS CODE	MEANING
On	$I_{OUT} < I_{OUT,Th}$ (1)	0	Open circuit
	$I_{OUT} \geq I_{OUT,Th}$ (1)	Channel n error status bit 1	Normal

(1) $I_{OUT,Th} = 0.5 \times I_{OUT,target}$ (typical)

9.3.2 Overtemperature Detection and Shutdown

The TLC59116 LED is equipped with a global overtemperature sensor and 16 individual channel-selective overtemperature sensors.

- When the global sensor reaches the trip temperature, all output channels are shut down, and the error status is stored in the internal Error Status register of every channel. After shutdown, the channels automatically restart after cooling down, if the control signal (output latch) remains on. The stored error status is not reset after cooling down and can be read out as the error status code in registers EFLAG1 and EFLAG2.
- When one of the channel-specific sensors reaches trip temperature, only the affected output channel is shut down, and the error status is stored only in the internal Error Status register of the affected channel. After shutdown, the channel automatically restarts after cooling down, if the control signal (output latch) remains on. The stored error status is not reset after cooling down and can be read out as error status code in registers EFLAG1 and EFLAG2.

For channel-specific overtemperature error detection, a channel must be on.

The error flags of open-circuit and overtemperature are ORed to set the EFLAG1 and EFLAG2 registers.

The error status code due to overtemperature is reset when the host writes 1 to bit 7 of the MODE2 register. The host must write 0 to bit 7 of the MODE2 register to enable the overtemperature error flag.

Table 2. Overtemperature Detection (1)

STATE OF OUTPUT PORT	CONDITION	ERROR STATUS CODE	MEANING
On On → all channels Off	$T_j < T_{j,trip}$ global	1	Normal
	$T_j > T_{j,trip}$ global	All error status bits = 0	Global overtemperature
On On → Off	$T_j < T_{j,trip}$ channel n	1	Normal
	$T_j > T_{j,trip}$ channel n	Channel n error status bit = 0	Channel n overtemperature

(1) The global shutdown threshold temperature is approximately 170°C.

9.3.3 Power-On Reset (POR)

When power is applied to V_{CC}, an internal power-on reset holds the TLC59116 in a reset condition until V_{CC} reaches V_{POR}. At this point, the reset condition is released and the TLC59116 registers, and I^2C bus state machine are initialized to their default states (all zeroes), causing all the channels to be deselected. Thereafter, V_{CC} must be lowered below 0.2 V to reset the device.

9.3.4 External Reset

A reset can be accomplished by holding the $\overline{RESET}$ pin low for a minimum of t_W. The TLC59116 registers and I^2C state machine are held in their default states until the $\overline{RESET}$ input is again high.

This input requires a pullup resistor to V_{CC} if no active connection is used.

9.3.5 Software Reset

The Software Reset Call (SWRST Call) allows all the devices in the I^2C bus to be reset to the power-up state value through a specific I^2C bus command.

The SWRST Call function is defined as the following:

1. A Start command is sent by the I^2C bus master.
2. The reserved SWRST I^2C bus address 1101 011 with the R/$\overline{W}$ bit set to 0 (write) is sent by the I^2C bus

master.

3. The TLC59116 device(s) acknowledge(s) after seeing the SWRST Call address 1101 0110 (D6h) only. If the R/$\overline{W}$ bit is set to 1 (read), no acknowledge is returned to the I^2C bus master.
4. Once the SWRST Call address has been sent and acknowledged, the master sends two bytes with two specific values (SWRST data byte 1 and byte 2):
   (a) Byte1 = A5h: the TLC59116 acknowledges this value only. If byte 1 is not equal to A5h, the TLC59116 does not acknowledge it.
   (b) Byte 2 = 5Ah: the TLC59116 acknowledges this value only. If byte 2 is not equal to 5Ah, the TLC59116 does not acknowledge it.

   If more than two bytes of data are sent, the TLC59116 does not acknowledge any more.
5. Once the correct two bytes (SWRST data byte 1 and byte 2 only) have been sent and correctly acknowledged, the master sends a Stop command to end the SWRST Call. The TLC59116 then resets to the default value (power-up value) and is ready to be addressed again within the specified bus free time (t_{BUF}).

The I^2C bus master may interpret a non-acknowledge from the TLC59116 (at any time) as a SWRST Call Abort. The TLC59116 does not initiate a reset of its registers. This happens only when the format of the Start Call sequence is not correct.

9.3.6 Individual Brightness Control With Group Dimming/Blinking

A 97-kHz fixed-frequency signal with programmable duty cycle (8 bits, 256 steps) is used to control the individual brightness for each LED.

On top of this signal, one of the following signals can be superimposed (this signal can be applied to the four LED outputs):

- A lower 190-Hz fixed-frequency signal with programmable duty cycle (8 bits, 256 steps) provides a global brightness control.
- A programmable frequency signal from 24 Hz to 1/10.73 s (8 bits, 256 steps) provides a global blinking control.

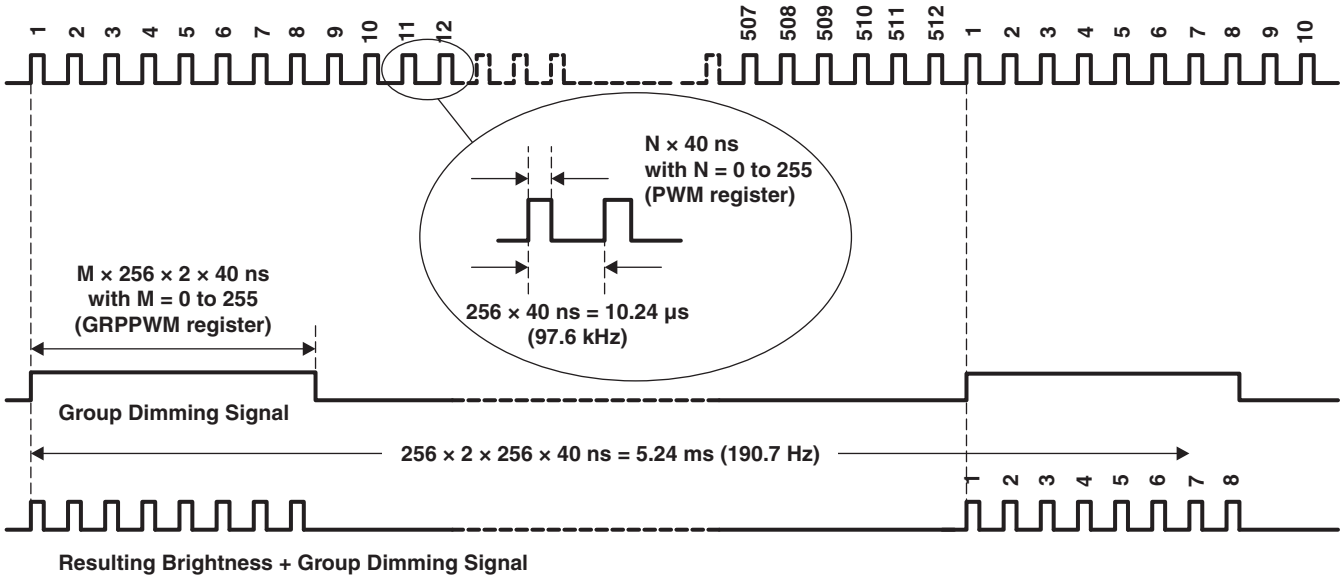

NOTE:

- Minimum pulse width for LEDn brightness control is 40 ns.
- Minimum pulse width for group dimming is 20.48 µs.
- When M = 1 (GRPPWM register value), the resulting LEDn Brightness Control + Group Dimming signal has two pulses of the LED Brightness Control signal (pulse width = n × 40 ns, with n defined in the PWMx register).
- This resulting Brightness + Group Dimming signal shows a resulting control signal with M = 4 (8 pulses).

Figure 7. Brightness and Group Dimming Signals

Copyright © 2008–2014, Texas Instruments Incorporated

9.4 Device Functional Modes

9.4.1 Active

Active mode occurs when one or more of the output channels is enabled.

9.4.2 Standby

Standby mode occurs when all output channels are disabled. Standby mode may be entered via I^2C command or by pulling the $\overline{RESET}$ pin low.

9.5 Register Maps

Table 3 describes the registers in the TLC59116.

Table 3. Register Descriptions

REGISTER NUMBER (HEX)	NAME	ACCESS (1)	DESCRIPTION
00	MODE1	R/W	Mode 1
01	MODE2	R/W	Mode 2
02	PWM0	R/W	Brightness control LED0
03	PWM1	R/W	Brightness control LED1
04	PWM2	R/W	Brightness control LED2
05	PWM3	R/W	Brightness control LED3
06	PWM4	R/W	Brightness control LED4
07	PWM5	R/W	Brightness control LED5
08	PWM6	R/W	Brightness control LED6
09	PWM7	R/W	Brightness control LED7
0A	PWM8	R/W	Brightness control LED8
0B	PWM9	R/W	Brightness control LED9
0C	PWM10	R/W	Brightness control LED10
0D	PWM11	R/W	Brightness control LED11
0E	PWM12	R/W	Brightness control LED12
0F	PWM13	R/W	Brightness control LED13
10	PWM14	R/W	Brightness control LED14
11	PWM15	R/W	Brightness control LED15
12	GRPPWM	R/W	Group duty cycle control
13	GRPFREQ	R/W	Group frequency
14	LEDOUT0	R/W	LED output state 0
15	LEDOUT1	R/W	LED output state 1
16	LEDOUT2	R/W	LED output state 2
17	LEDOUT3	R/W	LED output state 3
18	SUBADR1	R/W	I^2C bus subaddress 1
19	SUBADR2	R/W	I^2C bus subaddress 2
1A	SUBADR3	R/W	I^2C bus subaddress 3
1B	ALLCALLADR	R/W	LED All Call I^2C bus address
1C	IREF	R/W	IREF configuration
1D	EFLAG1	R	Error flags 1
1E	EFLAG2	R	Error flags 2

(1) R = read, W = write

9.5.1 Mode Register 1 (MODE1)

Table 4 describes Mode Register 1.

Table 4. MODE1 – Mode Register 1 (Address 00h) Bit Description

BIT	SYMBOL	ACCESS(1)	VALUE	DESCRIPTION
7	AI2	R	0(2)	Register auto-increment disabled
			1	Register auto-increment enabled
6	AI1	R	0(2)	Auto-increment bit 1 = 0
			1	Auto-increment bit 1 = 1
5	AI0	R	0(2)	Auto-increment bit 0 = 0
			1	Auto-increment bit 0 = 1
4	OSC	R/W	0	Normal mode(3)
			1(2)	Oscillator off.
3	SUB1	R/W	0(2)	Device does not respond to I^2C bus subaddress 1.
			1	Device responds to I^2C bus subaddress 1.
2	SUB2	R/W	0(2)	Device does not respond to I^2C bus subaddress 2.
			1	Device responds to I^2C bus subaddress 2.
1	SUB3	R/W	0(2)	Device does not respond to I^2C bus subaddress 3.
			1	Device responds to I^2C bus subaddress 3.
0	ALLCALL	R/W	0	Device does not respond to LED All Call I^2C bus address.
			1(2)	Device responds to LED All Call I^2C bus address.

(1) R = read, W = write
(2) Default value
(3) Requires 500 µs maximum for the oscillator to be up and running once OSC bit has been set to logic 1. Timings on LED outputs are not ensured if PWMx, GRPPWM, or GRPFREQ registers are accessed within the 500-µs window.

NOTE

The OSC bit (Bit 4) must be set to 0 before any outputs will turn on. Proper operation requires this bit to be 0. Setting the bit to a 1 will turn all channels off.

9.5.2 Mode Register 2 (MODE2)

Table 5 describes Mode Register 2.

Table 5. MODE2 – Mode Register 2 (Address 01h) Bit Description

BIT	SYMBOL	ACCESS(1)	VALUE	DESCRIPTION
7	EFCLR	R/W	0(2)	Enable error status flag
			1	Clear error status flag
6		R	0(2)	Reserved
5	DMBLNK	R/W	0(2)	Group control = dimming
			1	Group control = blinking
4		R	0(2)	Reserved
3	OCH	R/W	0(2)	Outputs change on Stop command(3)
			1	Outputs change on ACK
2:0		R	000(2)	Reserved

(1) R = read, W = write
(2) Default value
(3) Change of the outputs at the Stop command allows synchronizing outputs of more than one TLC59116. Applicable to registers from 02h (PWM0) to 17h (LEDOUT3) only.

Copyright © 2008–2014, Texas Instruments Incorporated

9.5.3 Brightness Control Registers 0 to 15 (PWM0 to PWM15)

Table 6 describes Brightness Control Registers 0 to 15.

Table 6. PWM0 to PWM15 – Brightness Control Registers 0 to 15 (Address 02h to 11h) Bit Description

ADDRESS	REGISTER	BIT	SYMBOL	ACCESS(1)	VALUE	DESCRIPTION
02h	PWM0	7:0	IDC0[7:0]	R/W	0000 0000(2)	PWM0 individual duty cycle
03h	PWM1	7:0	IDC1[7:0]	R/W	0000 0000(2)	PWM1 individual duty cycle
04h	PWM2	7:0	IDC2[7:0]	R/W	0000 0000(2)	PWM2 individual duty cycle
05h	PWM3	7:0	IDC3[7:0]	R/W	0000 0000(2)	PWM3 individual duty cycle
06h	PWM4	7:0	IDC4[7:0]	R/W	0000 0000(2)	PWM4 individual duty cycle
07h	PWM5	7:0	IDC5[7:0]	R/W	0000 0000(2)	PWM5 individual duty cycle
08h	PWM6	7:0	IDC6[7:0]	R/W	0000 0000(2)	PWM6 individual duty cycle
09h	PWM7	7:0	IDC7[7:0]	R/W	0000 0000(2)	PWM7 individual duty cycle
0Ah	PWM8	7:0	IDC8[7:0]	R/W	0000 0000(2)	PWM8 individual duty cycle
0Bh	PWM9	7:0	IDC9[7:0]	R/W	0000 0000(2)	PWM9 individual duty cycle
0Ch	PWM10	7:0	IDC10[7:0]	R/W	0000 0000(2)	PWM10 individual duty cycle
0Dh	PWM11	7:0	IDC11[7:0]	R/W	0000 0000(2)	PWM11 individual duty cycle
0Eh	PWM12	7:0	IDC12[7:0]	R/W	0000 0000(2)	PWM12 individual duty cycle
0Fh	PWM13	7:0	IDC13[7:0]	R/W	0000 0000(2)	PWM13 individual duty cycle
10h	PWM14	7:0	IDC14[7:0]	R/W	0000 0000(2)	PWM14 individual duty cycle
11h	PWM15	7:0	IDC15[7:0]	R/W	0000 0000(2)	PWM15 individual duty cycle

(1) R = read, W = write
(2) Default value

A 97-kHz fixed frequency signal is used for each output. Duty cycle is controlled through 256 linear steps from 00h (0% duty cycle = LED output off) to FFh (99.6% duty cycle = LED output at maximum brightness). Applicable to LED outputs programmed with LDRx = 10 or 11 (LEDOUT0, LEDOUT1, LEDOUT2 and LEDOUT3 registers).

$$\text{Duty cycle} = \text{IDCn[7:0]} / 256 \quad (1)$$

9.5.4 Group Duty Cycle Control Register (GRPPWM)

Table 7 describes the Group Duty Cycle Control Register.

Table 7. GRPPWM – Group Brightness Control Register (Address 12h) Bit Description

ADDRESS	REGISTER	BIT	SYMBOL	ACCESS(1)	VALUE	DESCRIPTION
12h	GRPPWM	7:0	GDC0[7:0]	R/W	1111 1111(2)	GRPPWM register

(1) R = read, W = write
(2) Default value

When the DMBLNK bit (MODE2 register) is programmed with logic 0, a 190-Hz fixed-frequency signal is superimposed with the 97-kHz individual brightness control signal. GRPPWM is then used as a global brightness control, allowing the LED outputs to be dimmed with the same value. The value in GRPFREQ is then a Don't care.

General brightness for the 16 outputs is controlled through 256 linear steps from 00h (0% duty cycle = LED output off) to FFh (99.6% duty cycle = maximum brightness). This is applicable to LED outputs programmed with LDRx = 11 (LEDOUT0, LEDOUT1, LEDOUT2 and LEDOUT3 registers).

When DMBLNK bit is programmed with logic 1, the GRPPWM and GRPFREQ registers define a global blinking pattern, where GRPFREQ defines the blinking period (from 24 Hz to 10.73 s) and GRPPWM defines the duty cycle (ON/OFF ratio in %).

$$\text{Duty cycle} = \text{GDC0[7:0]} / 256 \quad (2)$$

Copyright © 2008–2014, Texas Instruments Incorporated

9.5.5 Group Frequency Register (GRPFREQ)

Table 8 describes the Group Frequency Register.

Table 8. GRPFREQ – Group Frequency Register (Address 13h) Bit Description

ADDRESS	REGISTER	BIT	SYMBOL	ACCESS(1)	VALUE	DESCRIPTION
13h	GRPFREQ	7:0	GFRQ[7:0]	R/W	0000 0000(2)	GRPFREQ register

(1) R = read, W = write
(2) Default value

GRPFREQ is used to program the global blinking period when the DMBLNK bit (MODE2 register) is equal to 1. Value in this register is a Don't care when DMBLNK = 0. This is applicable to LED output programmed with LDRx = 11 (LEDOUT0, LEDOUT1, LEDOUT2 and LEDOUT3 registers).

The blinking period is controlled through 256 linear steps from 00h (41 ms, frequency 24 Hz) to FFh (10.73 s).

Global blinking period (seconds) = (GFRQ[7:0] + 1) / 24

9.5.6 LED Driver Output State Registers 0 to 3 (LEDOUT0 to LEDOUT3)

Table 9 describes LED Driver Output State Registers 0 to 3.

Table 9. LEDOUT0 to LEDOUT3 – LED Driver Output State Registers 0 to 3 (Address 14h to 17h) Bit Description

ADDRESS	REGISTER	BIT	SYMBOL	ACCESS(1)	VALUE	DESCRIPTION
14h	LEDOUT0	7:6	LDR3[1:0]	R/W	00(2)	LED3 output state control
		5:4	LDR2[1:0]	R/W	00(2)	LED2 output state control
		3:2	LDR1[1:0]	R/W	00(2)	LED1 output state control
		1:0	LDR0[1:0]	R/W	00(2)	LED0 output state control
15h	LEDOUT1	7:6	LDR7[1:0]	R/W	00(2)	LED7 output state control
		5:4	LDR6[1:0]	R/W	00(2)	LED6 output state control
		3:2	LDR5[1:0]	R/W	00(2)	LED5 output state control
		1:0	LDR4[1:0]	R/W	00(2)	LED4 output state control
16h	LEDOUT2	7:6	LDR11[1:0]	R/W	00(2)	LED11 output state control
		5:4	LDR10[1:0]	R/W	00(2)	LED10 output state control
		3:2	LDR9[1:0]	R/W	00(2)	LED9 output state control
		1:0	LDR8[1:0]	R/W	00(2)	LED8 output state control
17h	LEDOUT3	7:6	LDR15[1:0]	R/W	00(2)	LED15 output state control
		5:4	LDR14[1:0]	R/W	00(2)	LED14 output state control
		3:2	LDR13[1:0]	R/W	00(2)	LED13 output state control
		1:0	LDR12[1:0]	R/W	00(2)	LED12 output state control

(1) R = read, W = write
(2) Default value

LDRx = 00: LED driver x is off (default power-up state).

LDRx = 01: LED driver x is fully on (individual brightness and group dimming/blinking not controlled).

LDRx = 10: LED driver x is individual brightness can be controlled through its PWMx register.

LDRx = 11: LED driver x is individual brightness and group dimming/blinking can be controlled through its PWMx register and the GRPPWM registers.

Copyright © 2008–2014, Texas Instruments Incorporated

9.5.7 I²C Bus Subaddress Registers 1 to 3 (SUBADR1 to SUBADR3)

Table 10 describes I²C Bus Subaddress Registers 1 to 3.

Table 10. SUBADR1 to SUBADR3 – I²C Bus Subaddress Registers 1 to 3 (Address 18h to 1Ah) Bit Description

ADDRESS	REGISTER	BIT	SYMBOL	ACCESS(1)	VALUE	DESCRIPTION
18h	SUBADR1	7:1	A1[7:1]	R/W	1101 001(2)	I²C bus subaddress 1
		0	A1[0]	R	0(2)	Reserved
19h	SUBADR2	7:1	A2[7:1]	R/W	1101 010(2)	I²C bus subaddress 2
		0	A2[0]	R	0(2)	Reserved
1Ah	SUBADR3	7:1	A3[7:1]	R/W	1101 100(2)	I²C bus subaddress 3
		0	A3[0]	R	0(2)	Reserved

(1) R = read, W = write
(2) Default value

Subaddresses are programmable through the I²C bus. Default power-up values are D2h, D4h, D8h. The TLC59116 does not acknowledge these addresses immediately after power-up (the corresponding SUBx bit in MODE1 register is equal to 0).

Once subaddresses have been programmed to valid values, the SUBx bits (MODE1 register) must be set to 1 to allows the device to acknowledge these addresses.

Only the 7 MSBs representing the I²C bus subaddress are valid. The LSB in SUBADRx register is a read-only bit (0).

When SUBx is set to 1, the corresponding I²C bus subaddress can be used during either an I²C bus read or write sequence.

9.5.8 LED All Call I²C Bus Address Register (ALLCALLADR)

Table 11 describes the LED All Call I²C Bus Address Register.

Table 11. ALLCALLADR – LED All Call I²C Bus Address Register (Address 1Bh) Bit Description

ADDRESS	REGISTER	BIT	SYMBOL	ACCESS(1)	VALUE	DESCRIPTION
1Bh	ALLCALLADR	7:1	AC[7:1]	R/W	1101 000(2)	All Call I²C bus address
		0	AC[0]	R	0(2)	Reserved

(1) R = read, W = write
(2) Default value

The LED All Call I²C bus address allows all the TLC59116 devices in the bus to be programmed at the same time (ALLCALL bit in register MODE1 must be equal to 1, which is the power-up default state). This address is programmable through the I²C bus and can be used during either an I²C bus read or write sequence. The register address can also be programmed as a Sub Call.

Only the seven MSBs representing the All Call I²C bus address are valid. The LSB in ALLCALLADR register is a read-only bit (0).

If ALLCALL bit = 0, the device does not acknowledge the address programmed in register ALLCALLADR.

Copyright © 2008–2014, Texas Instruments Incorporated

9.5.9 Output Gain Control Register (IREF)

Table 12 describes the Output Gain Control Register.

Table 12. IREF – Output Gain Control Register (Address 1Ch) Bit Description

ADDRESS	REGISTER	BIT	SYMBOL	ACCESS (1)	VALUE	DESCRIPTION
1Ch	IREF	7	CM	R/W	1 (2)	High/low current multiplier
		6	HC	R/W	1 (2)	Subcurrent
		5:0	CC[5:0]	R/W	11 1111 (2)	Current multiplier

(1) R = read, W = write
(2) Default value

IREF determines the voltage gain (VG), which affects the voltage at the REXT terminal and indirectly the reference current (I_{ref}) flowing through the external resistor at terminal REXT. Bit 0 is the Current Multiplier (CM) bit, which determines the ratio $I_{OUT,target}/I_{ref}$. Each combination of VG and CM sets a Current Gain (CG).

- VG: the relationship between {HC,CC[0:5]} and the voltage gain is calculated as shown:
  VG = (1 + HC) × (1 + D/64) / 4
  D = CC0 × 2^5 + CC1 × 2^4 + CC2 × 2^3 + CC3 × 2^2 + CC4 × 2^1 + CC5 × 2^0
  Where HC is 1 or 0, and D is the binary value of CC[0:5]. So, the VG could be regarded as a floating-point number with 1-bit exponent HC and 6-bit mantissa CC[0:5]. {HC,CC[0:5]} divides the programmable voltage gain (VG) into 128 steps and two sub-bands:
  Low-voltage subband (HC = 0): VG = 1/4 to 127/256, linearly divided into 64 steps
  High-voltage subband (HC = 1): VG = 1/2 to 127/128, linearly divided into 64 steps
- CM: In addition to determining the ratio $I_{OUT,target}/I_{ref}$, CM limits the output current range.
  High Current Multiplier (CM = 1): $I_{OUT,target}/I_{ref}$ = 15, suitable for output current range I_{OUT} = 10 mA to 120 mA.
  Low Current Multiplier (CM = 0): $I_{OUT,target}/I_{ref}$ = 5, suitable for output current range I_{OUT} = 5 mA to 40 mA
- CG: The total Current Gain is defined as:
  V_{REXT} = 1.26 V × VG
  $I_{ref} = V_{REXT}/R_{ext}$, if the external resistor (R_{ext}) is connected to ground.
  $I_{OUT,target} = I_{ref} \times 15 \times 3^{CM-1} = 1.26\ V/R_{ext} \times VG \times 15 \times 3^{CM-1} = (1.26\ V/R_{ext} \times 15) \times CG$
  $CG = VG \times 3^{CM-1}$
  Therefore, CG = (1/12) to (127/128), divided into 256 steps.

Examples

- IREF Code {CM, HC, CC[0:5]} = {1,1,111111}
  VG = 127/128 = 0.992 and CG = VG × 3^0 = VG = 0.992
- IREF Code {CM, HC, CC[0:5]} = {1,1,000000}
  VG = (1 + 1) × (1 + 0/64)/4 = 1/2 = 0.5, and CG = 0.5
- IREF Code {CM, HC, CC[0:5]} = {0,0,000000}
  VG = (1 + 0) × (1 + 0/64)/4 = 1/4, and CG = (1/4) × 3^{-1} = 1/12

After power-on, the default value of the Configuration Code {CM, HC, CC[0:5]} is {1,1,111111}. Therefore, VG = CG = 0.992. The relationship between the Configuration Code and the Current Gain is shown in Figure 8.

Copyright © 2008–2014, Texas Instruments Incorporated

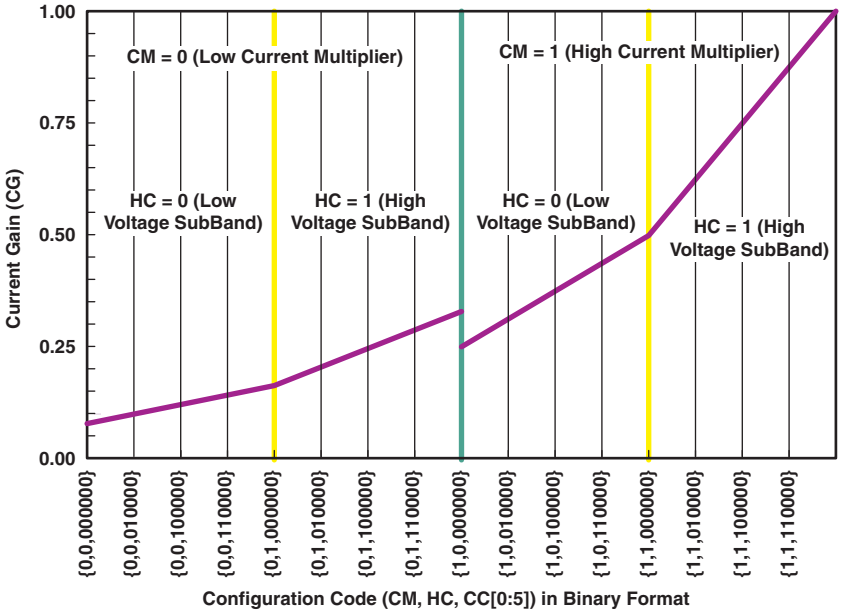

Figure 8. Current Gain vs Configuration Code

9.5.10 Error Flags Registers (EFLAG1, EFLAG2)

Table 13 describes Error Flags Registers 1 and 2.

Table 13. EFLAG1, EFLAG2 – Error Flags Registers (Address 1Dh and 1Eh) Bit Description

ADDRESS	REGISTER	BIT	SYMBOL	ACCESS(1)	VALUE(2)	DESCRIPTION(3)
1Dh	EFLAG1	0	EFLAG1[0]	R	0	A 1 indicates an error - Channel 0
		1	EFLAG1[1]		0	A 1 indicates an error - Channel 1
		2	EFLAG1[2]		0	A 1 indicates an error - Channel 2
		3	EFLAG1[3]		0	A 1 indicates an error - Channel 3
		4	EFLAG1[4]		0	A 1 indicates an error - Channel 4
		5	EFLAG1[5]		0	A 1 indicates an error - Channel 5
		6	EFLAG1[6]		0	A 1 indicates an error - Channel 6
		7	EFLAG1[7]		0	A 1 indicates an error - Channel 7
1Eh	EFLAG2	0	EFLAG1[0]	R	0	A 1 indicates an error - Channel 8
		1	EFLAG1[1]		0	A 1 indicates an error - Channel 9
		2	EFLAG1[2]		0	A 1 indicates an error - Channel 10
		3	EFLAG1[3]		0	A 1 indicates an error - Channel 11
		4	EFLAG1[4]		0	A 1 indicates an error - Channel 12
		5	EFLAG1[5]		0	A 1 indicates an error - Channel 13
		6	EFLAG1[6]		0	A 1 indicates an error - Channel 14
		7	EFLAG1[7]		0	A 1 indicates an error - Channel 15

(1) R = read, W = write
(2) Default value
(3) At power-up, in order to initialize the Error Flags registers, the host must write 1 to bit 7 of the MODE2 register and then write 0 to bit 7 of the MODE2 register.

Copyright © 2008–2014, Texas Instruments Incorporated

9.5.11 Control Register

Following the successful acknowledgment of the slave address, LED All Call address or LED Sub Call address, the bus master sends a byte to the TLC59116, which is stored in the Control register. The lowest five bits are used as a pointer to determine which register is accessed (D[4:0]). The highest three bits are used as auto-increment flag and auto-increment options (AI[2:0]).

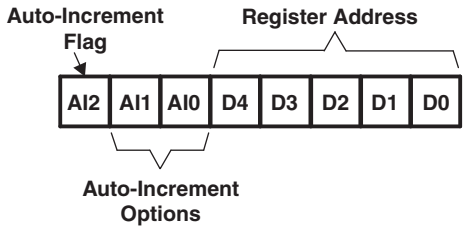

Figure 9. Control Register

When the auto-increment flag is set (AI2 = logic 1), the five low order bits of the Control register are automatically incremented after a read or write. This allows the user to program the registers sequentially. Four different types of auto-increment are possible, depending on AI1 and AI0 values.

Table 14. Auto-Increment Options

AI2	AI1	AI0	DESCRIPTION
0	0	0	No auto-increment
1	0	0	Auto-increment for all registers. D[4:0] roll over to 0 0000 after the last register (1 1011) is accessed.
1	0	1	Auto-increment for individual brightness registers only. D[4:0] roll over to 0 0010 after the last register (1 0001) is accessed.
1	1	0	Auto-increment for global control registers only. D[4:0] roll over to 1 0010 after the last register (1 0011) is accessed.
1	1	1	Auto-increment for individual and global control registers only. D[4:0] roll over to 0 0010 after the last register (1 0011) is accessed.

NOTE

Other combinations are not shown in Table 14. (AI[2:0] = 001, 010, and 011) are reserved and must not be used for proper device operation.

AI[2:0] = 000 is used when the same register must be accessed several times during a single I^2C bus communication, for example, changing the brightness of a single LED. Data is overwritten each time the register is accessed during a write operation.

AI[2:0] = 100 is used when all the registers must be sequentially accessed, for example, power-up programming.

AI[2:0] = 101 is used when the four LED drivers must be individually programmed with different values during the same I^2C bus communication, for example, changing a color setting to another color setting.

AI[2:0] = 110 is used when the LED drivers must be globally programmed with different settings during the same I^2C bus communication, for example, global brightness or blinking change.

AI[2:0] = 111 is used when individually and global changes must be performed during the same I^2C bus communication, for example, changing color and global brightness at the same time.

Only the five least significant bits D[4:0] are affected by the AI[2:0] bits.

When the Control register is written, the register entry point determined by D[4:0] is the first register that will be addressed (read or write operation), and can be anywhere between 0 0000 and 1 1011 (as defined in Table 3). When AI[2] = 1, the Auto-Increment flag is set and the rollover value at which the point where the register increment stops and goes to the next one is determined by AI[2:0]. See Table 14 for rollover values. For example, if the Control register = 1111 0100 (F4h), then the register addressing sequence will be (in hex):

Copyright © 2008–2014, Texas Instruments Incorporated

14 → ... → 1B → 00 → ... → 13 → 02 → ... → 13 → 02 → ... as long as the master keeps sending or reading data.

10 Application and Implementation

NOTE

Information in the following applications sections is not part of the TI component specification, and TI does not warrant its accuracy or completeness. TI's customers are responsible for determining suitability of components for their purposes. Customers should validate and test their design implementation to confirm system functionality.

10.1 Application Information

10.1.1 Device Address

Following a Start condition, the bus master must output the address of the slave it is accessing.

10.1.2 Regular I²C Bus Slave Address

The I²C bus slave address of the TLC59116 is shown in Figure 10. To conserve power, no internal pullup resistors are incorporated on the hardware-selectable address pins, and they must be pulled high or low. For buffer management purposes, a set of sector information data should be stored.

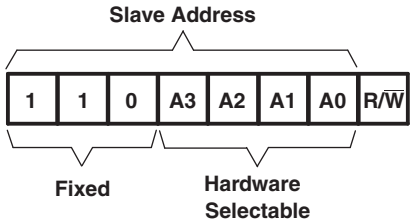

Figure 10. Slave Address

The last bit of the address byte defines the operation to be performed. When set to logic 1, a read operation is selected. When set to logic 0, a write operation is selected.

10.1.3 LED All Call I²C Bus Address

- Default power-up value (ALLCALLADR register): D0h or 1101 000
- Programmable through I²C bus (volatile programming)
- At power-up, LED All Call I²C bus address is enabled. TLC59116 sends an ACK when D0h (R/$\overline{W}$ = 0) or D1h (R/$\overline{W}$ = 1) is sent by the master.

See *LED All Call I2C Bus Address Register (ALLCALLADR)* for more detail.

NOTE

The default LED All Call I²C bus address (D0h or 1101 000) must not be used as a regular I²C bus slave address, since this address is enabled at power-up. All the TLC59116 devices on the I²C bus will acknowledge the address if it is sent by the I²C bus master.

10.1.4 LED Sub Call I²C Bus Address

- Three different I²C bus addresses can be used
- Default power-up values:
  - SUBADR1 register: D2h or 1101 001
  - SUBADR2 register: D4h or 1101 010
  - SUBADR3 register: D8h or 1101 100

Application Information (continued)

- Programmable through I²C bus (volatile programming)
- At power-up, Sub Call I²C bus address is disabled. TLC59116 does not send an ACK when D2h (R/$\overline{W}$ = 0) or D3h (R/$\overline{W}$ = 1) or D4h (R/$\overline{W}$ = 0) or D5h (R/$\overline{W}$ = 1) or D8h (R/$\overline{W}$ = 0) or D9h (R/$\overline{W}$ = 1) is sent by the master.

See *I2C Bus Subaddress Registers 1 to 3 (SUBADR1 to SUBADR3)* for more detail.

NOTE

The LED Sub Call I²C bus addresses may be used as regular I²C bus slave addresses if their corresponding enable bits are set to 0 in the *MODE1 Register*.

10.1.5 Software Reset I²C Bus Address

The address shown in Figure 11 is used when a reset of the TLC59116 is performed by the master. The software reset address (SWRST Call) must be used with R/$\overline{W}$ = 0. If R/$\overline{W}$ = 1, the TLC59116 does not acknowledge the SWRST. See *Software Reset* for more detail.

1	1	0	1	0	1	1	R/$\overline{W}$

Figure 11. Software Reset Address

NOTE

The Software Reset I²C bus address is reserved address and cannot be use as regular I²C bus slave address or as an LED All Call or LED Sub Call address.

10.1.6 Characteristics of the I²C Bus

The I²C bus is for two-way two-line communication between different devices or modules. The two lines are a serial data line (SDA) and a serial clock line (SCL). Both lines must be connected to a positive supply via a pullup resistor when connected to the output stages of a device. Data transfer may be initiated only when the bus is not busy.

10.1.6.1 Bit Transfer

One data bit is transferred during each clock pulse. The data on the SDA line must remain stable during the high period of the clock pulse as changes in the data line at this time will be interpreted as control signals (see Figure 12).

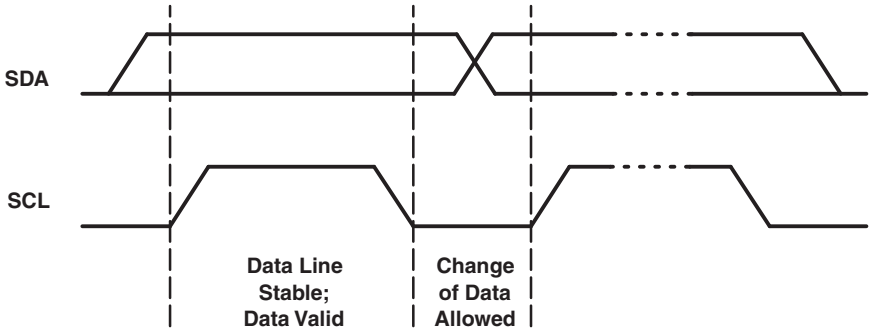

Figure 12. Bit Transfer

10.1.6.2 Start and Stop Conditions

Both data and clock lines remain high when the bus is not busy. A high-to-low transition of the data line while the clock is high is defined as the Start condition (S). A low-to-high transition of the data line while the clock is high is defined as the Stop condition (P) (see Figure 13).

Copyright © 2008–2014, Texas Instruments Incorporated

Application Information (continued)

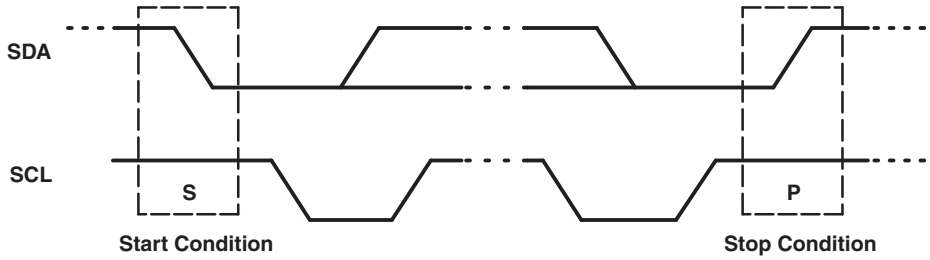

Figure 13. Start and Stop Conditions

10.1.6.3 Acknowledge

The number of data bytes transferred between the Start and the Stop conditions from transmitter to receiver is not limited. Each byte of eight bits is followed by one acknowledge bit. The acknowledge bit is a high level put on the bus by the transmitter, whereas the master generates an extra acknowledge related clock pulse.

A slave receiver that is addressed must generate an acknowledge after the reception of each byte. Also a master must generate an acknowledge after the reception of each byte that has been clocked out of the slave transmitter. The device that acknowledges has to pull down the SDA line during the acknowledge clock pulse, so that the SDA line is stable low during the high period of the acknowledge related clock pulse; set-up time and hold time must be taken into account.

A master receiver must signal an end of data to the transmitter by not generating an acknowledge on the last byte that has been clocked out of the slave. In this event, the transmitter must leave the data line high to enable the master to generate a Stop condition.

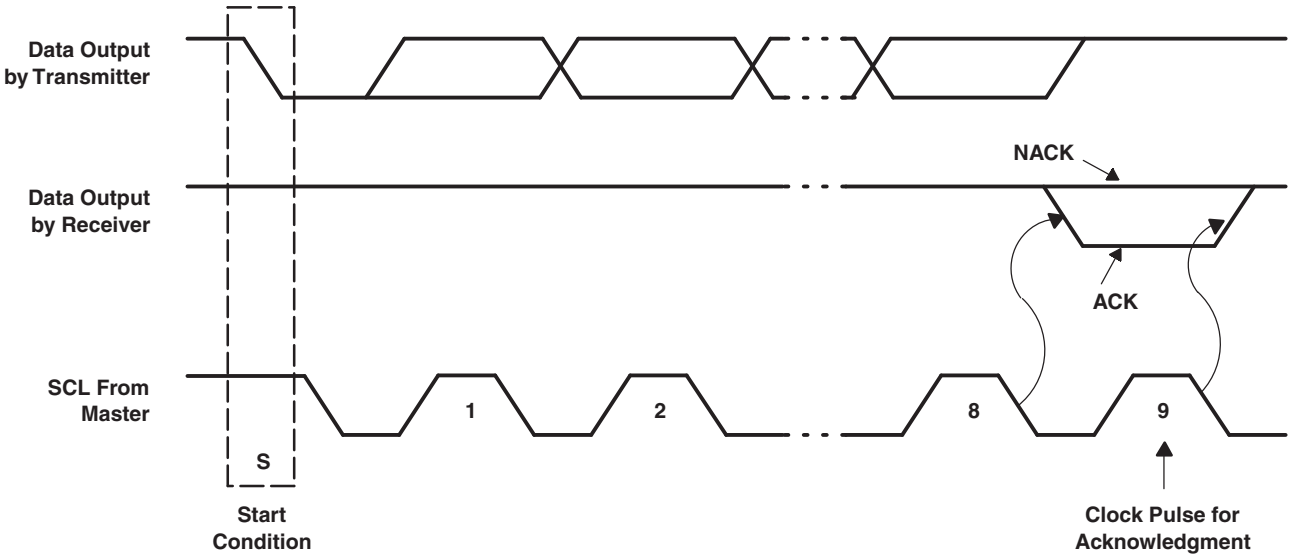

Figure 14. Acknowledge/Not Acknowledge on I²C Bus

Application Information (continued)

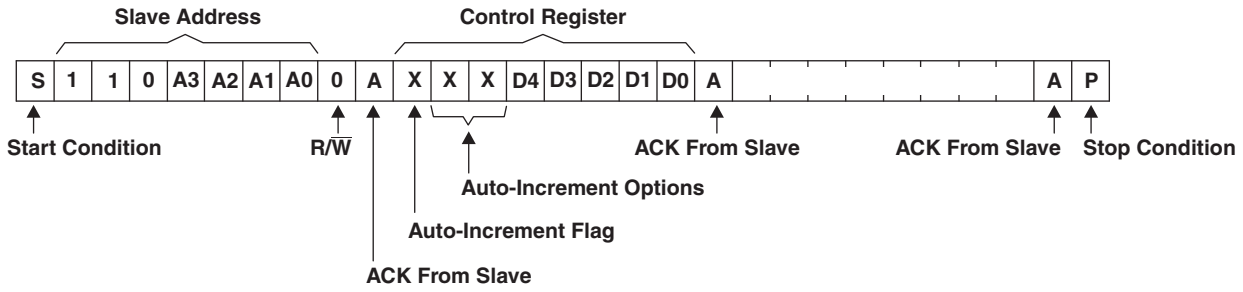

Figure 15. Write to a Specific Register

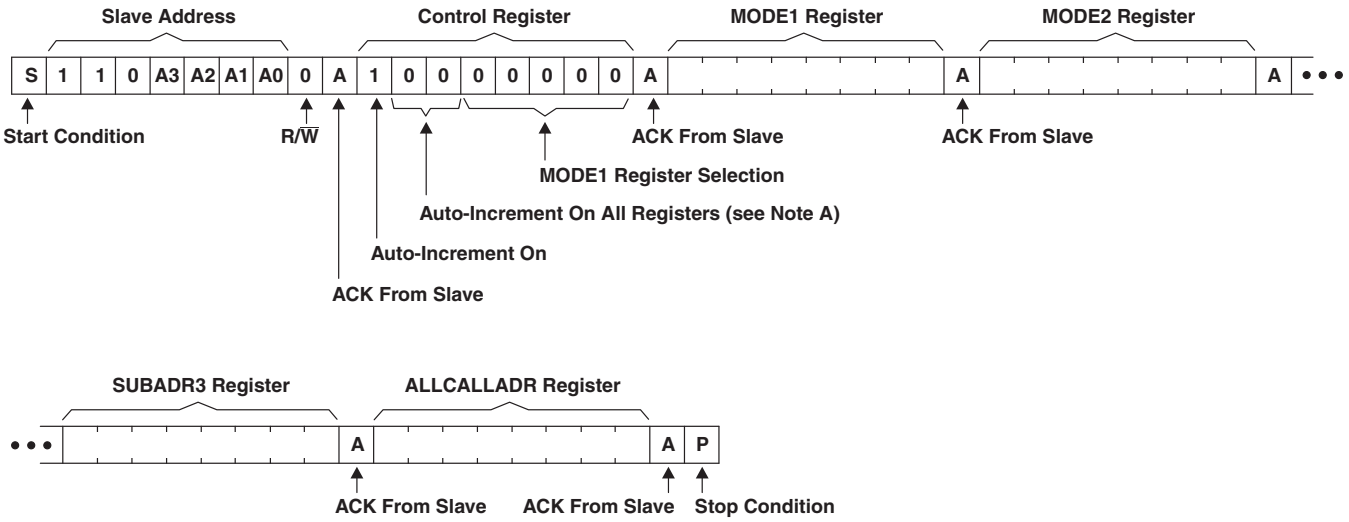

A. See Table 3 for register definitions.

Figure 16. Write to All Registers Using Auto-Increment

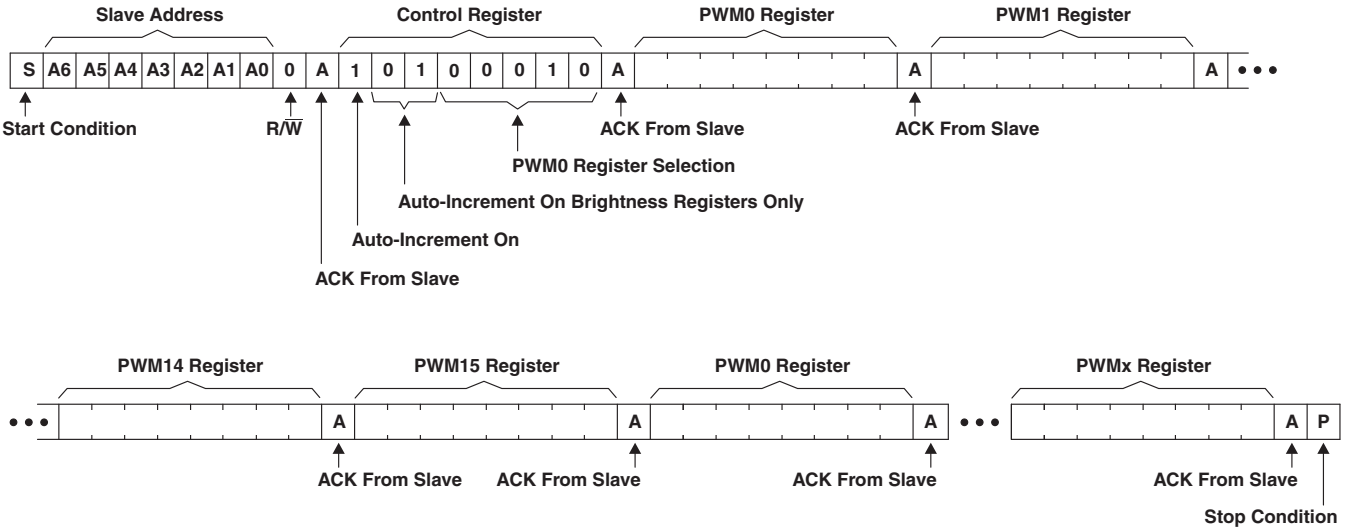

Figure 17. Multiple Writes to Individual Brightness Registers Using Auto-Increment

Copyright © 2008–2014, Texas Instruments Incorporated

Application Information (continued)

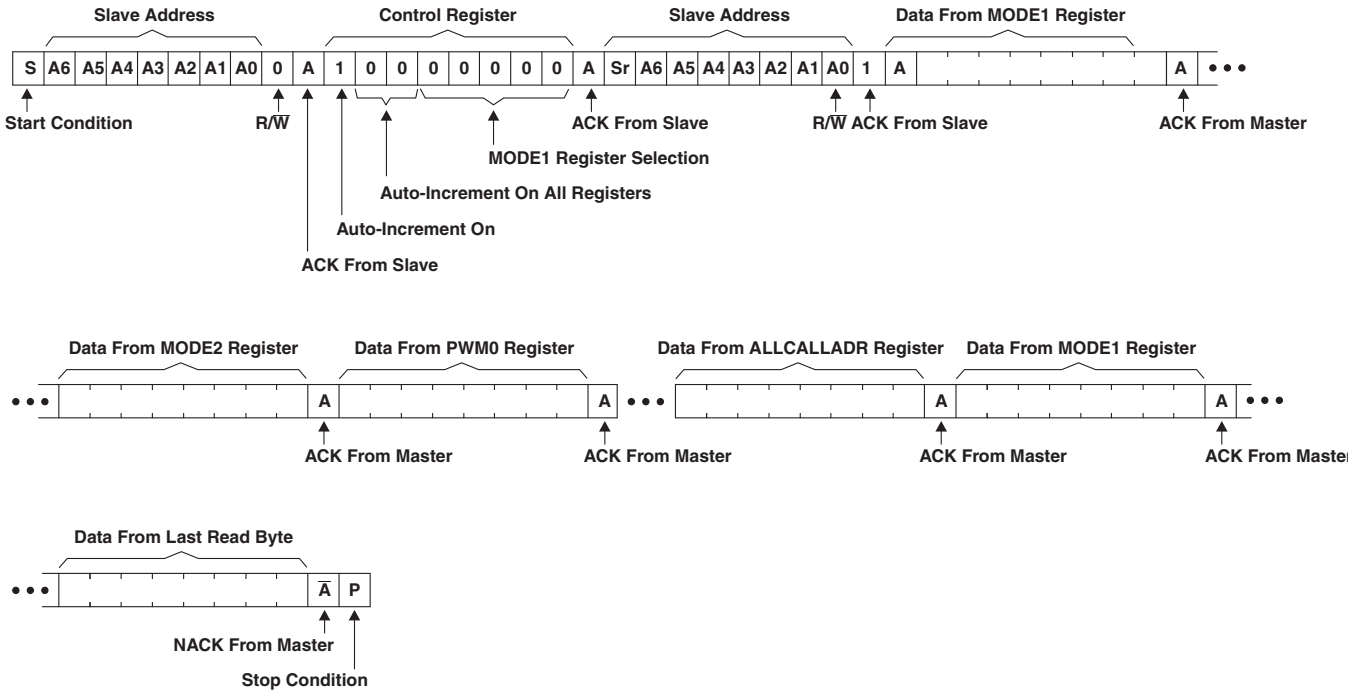

Figure 18. Read All Registers Auto-Increment

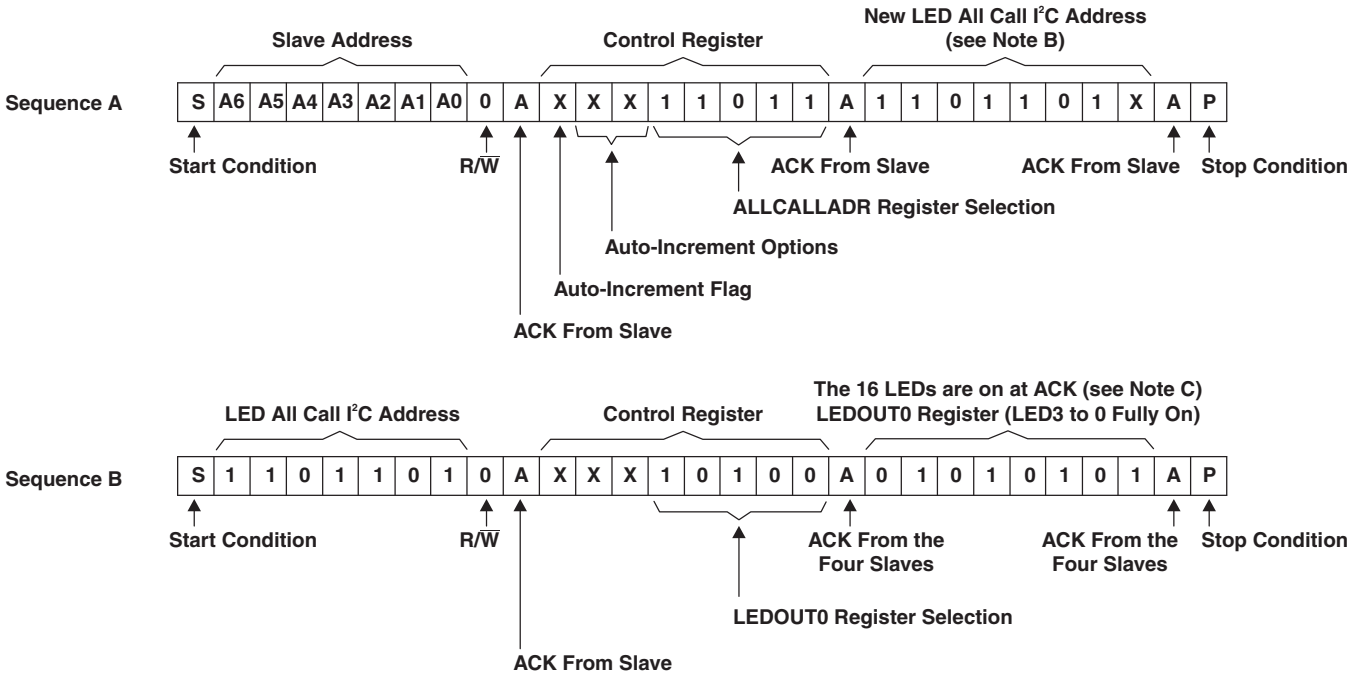

A. In this example, several TLC59116 devices are used, and the same Sequence A is sent to each of them.

B. The ALLCALL bit in the MODE1 register is equal to 1 for this example.

C. The OCH bit in the MODE2 register is equal to 1 for this example.

Figure 19. LED All Call I²C Bus Address Programming and LED All Call Sequence

Application Information (continued)

10.1.7 System Configuration

A device generating a message is a transmitter; a device receiving is the receiver. The device that controls the message is the master and the devices that are controlled by the master are the slaves (see Figure 20).

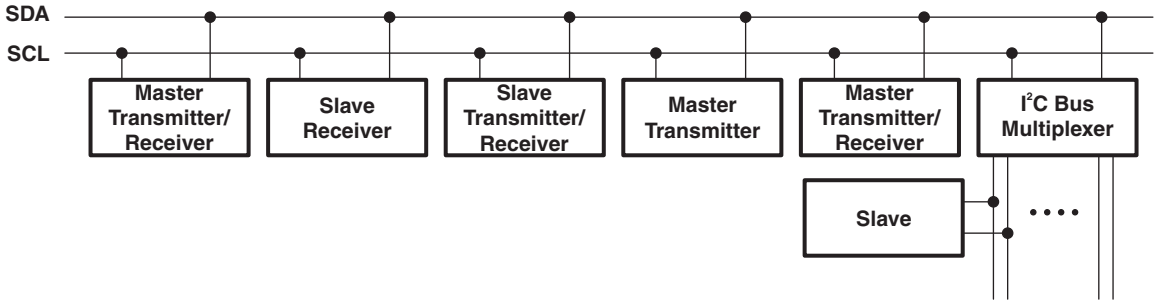

Figure 20. System Configuration

10.1.8 Constant Current Output

In LED display applications, TLC59116 provides nearly no current variations from channel to channel and from device to device. While I_{OUT} ≤ 52 mA, the maximum current skew between channels is less than ±6% and less than ±8% between devices.

10.2 Typical Application

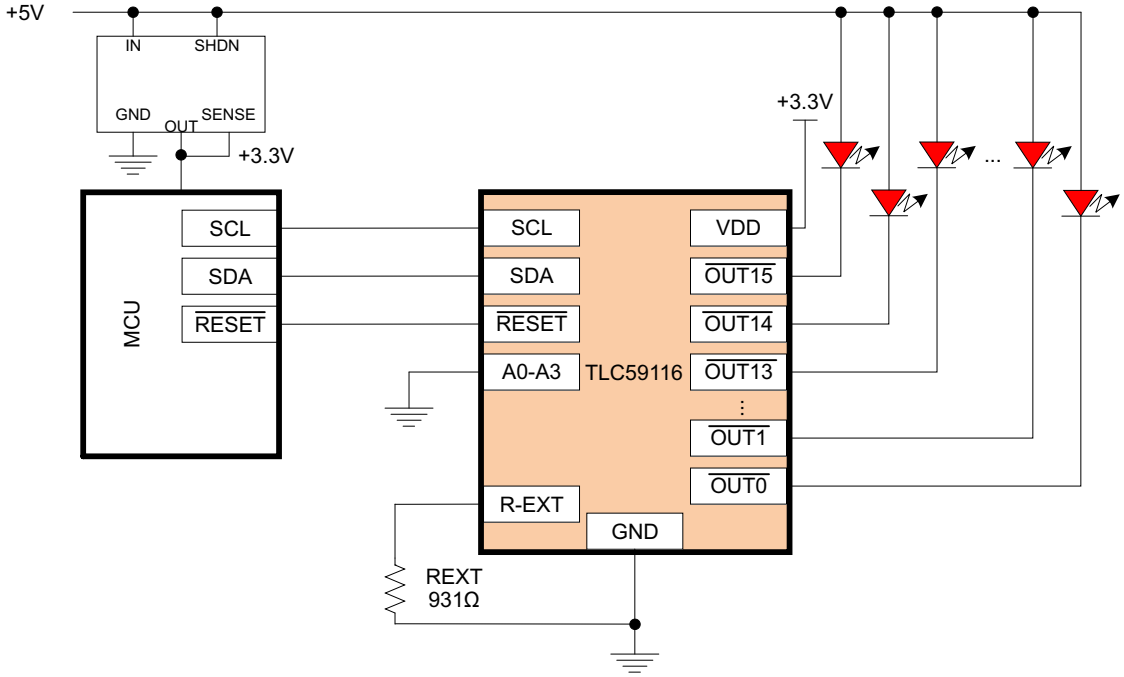

Figure 21. TLC59116 Typical Application

10.2.1 Design Requirements

Set the LED current to 20mA using the REXT resistor.

Copyright © 2008–2014, Texas Instruments Incorporated

Typical Application (continued)

10.2.2 Detailed Design Procedure

10.2.2.1 Adjusting Output Current

TLC59116 scales up the reference current (I_{ref}) set by the external resistor (R_{ext}) to sink the output current (I_{out}) at each output port. Table 12 shows the Configuration Code and discusses bits CM, HC, and CC[5:0]. The following formulas can be used to calculate the target output current $I_{OUT,target}$ in the saturation region:

$$V_{REXT} = 1.26\ V \times VG \tag{3}$$

$$I_{ref} = V_{REXT}/R_{ext}, \text{ if another end of the external resistor } R_{ext} \text{ is connected to ground} \tag{4}$$

$$I_{OUT,target} = I_{ref} \times 15 \times 3^{CM - 1} \tag{5}$$

Where R_{ext} is the resistance of the external resistor connected to the REXT terminal, and V_{REXT} is the voltage of REXT, which is controlled by the programmable voltage gain (VG), which is defined by the Configuration Code.

The Current Multiplier bit (CM) sets the ratio $I_{OUT,target}/I_{ref}$ to 15 or 5 (sets the exponent "CM – 1" to either 0 or –1). After power-on, the default value of VG is 127/128 = 0.992, and the default value of CM is 1, so that the ratio $I_{OUT,target}/I_{ref}$ = 15. Based on the default VG and CM:

$$V_{REXT} = 1.26\ V \times 127/128 = 1.25\ V \tag{6}$$

$$I_{OUT,target} = (1.25\ V/R_{ext}) \times 15 \tag{7}$$

Therefore, the default current is approximately 20mA at 931 ohms.. The default relationship after power-on between $I_{OUT,target}$ and R_{ext} is shown in Figure 1.

Figure 2 shows the output voltage versus the output current with several different resistor values on REXT. This shows the minimum voltage required at the device to have full VF across the LED. The VLED voltage must be higher than the VF plus the VOL of the driver. If the VLED is too high, more power will be dissipated in the driver. If this is the case, a resistor can be inserted in series with the LED to dissipate the excess power and reduce the thermal conditions on the driver.

If a single driver is used with LEDs that have different VF values, resistors can also be used in series with the LED to remove the excess power from the driver. In cases where not all outputs are being used, the unused outputs can be left floating without issue.

10.2.3 Application Curve

Figure 22 shows 20 mA of LED current along with programmed PWM dimming.

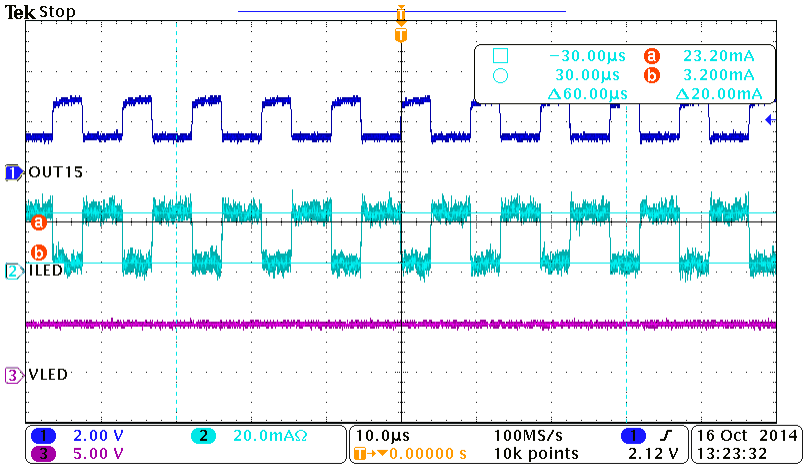

Figure 22. LED Current Set to 20 mA Through REXT

11 Power Supply Recommendations

TLC59116 is designed to operate from a VCC range of 3 V to 5.5 V.

12 Layout

12.1 Layout Guidelines

The I^2C signals (SDA / SCL) should be kept away from potential noise sources.

The traces carrying power through the LEDS should be wide enough to the handle necessary current.

All LED current passes through the device and into the ground node. There must be a strong connection between the device ground and the circuit board ground. For the RHB package, the thermal pad should be connected to ground to help dissipate heat.

12.2 Layout Example

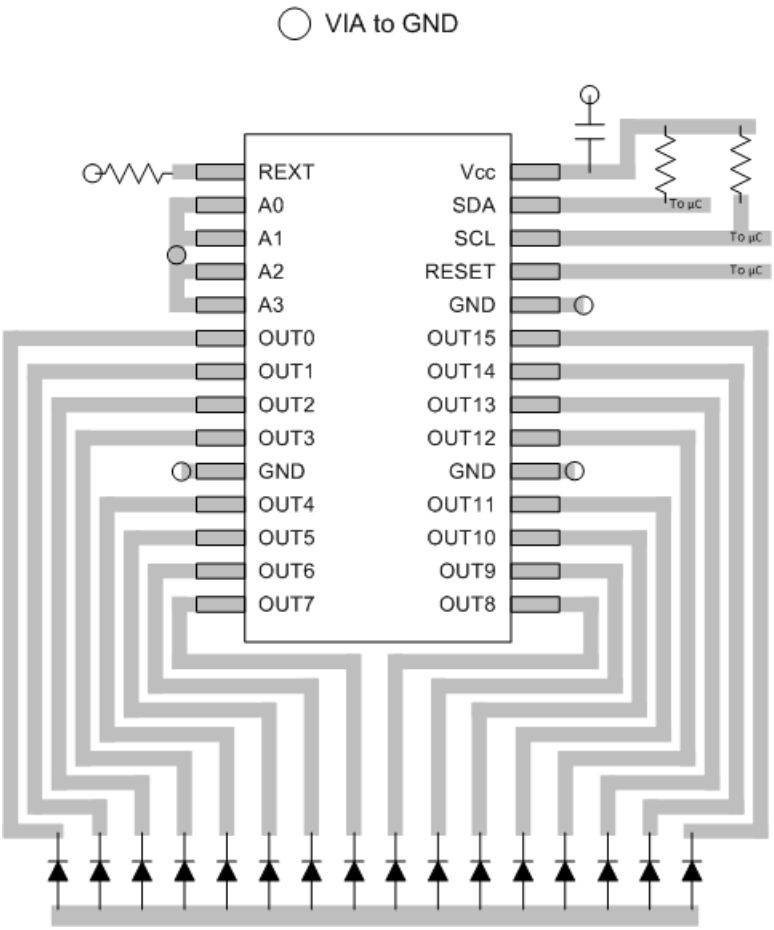

Figure 23. PW Layout Example

Copyright © 2008–2014, Texas Instruments Incorporated

Layout Example (continued)

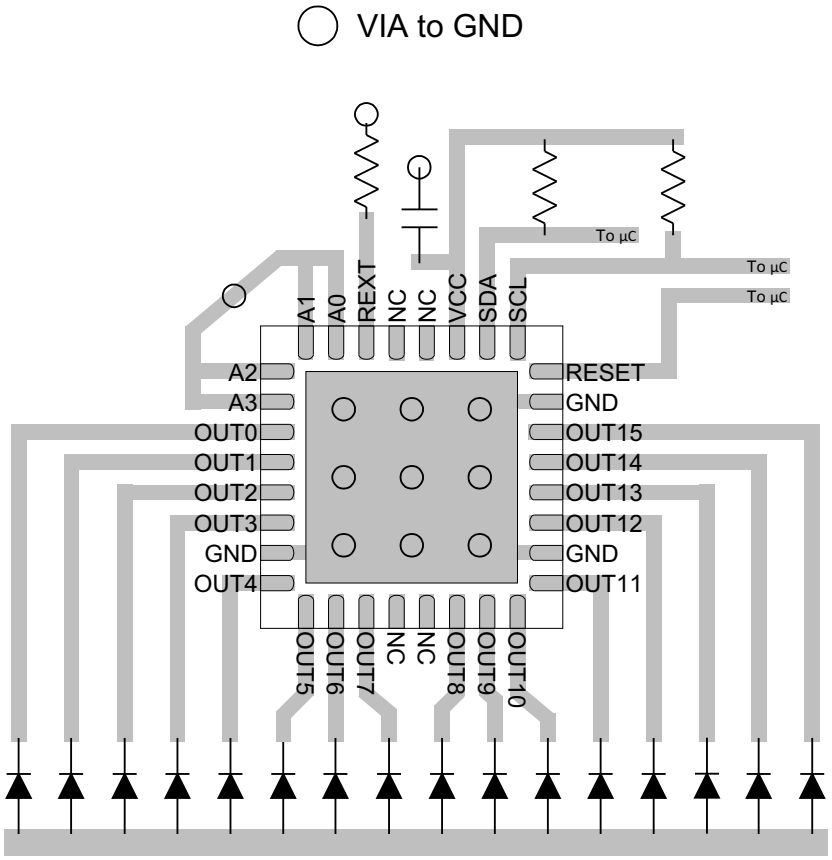

Figure 24. RHB Layout Example

The thermal relief vias are connected to the power pad of the RHB package shown in Figure 24.

12.3 Thermal Considerations

The maximum IC junction temperature should be restricted to 150°C under normal operating conditions. To calculate the maximum allowable dissipation, PD(max) for a given ambient temperature, use the following equation as a guideline:

$$P_{D(max)} = \frac{T_{J(max)} - T_A}{\Theta_{JA}}$$

where

- $P_{D(max)}$ = maximum allowable power dissipation
- $T_{J(max)}$ = maximum allowable junction temperature (150°C for the TLC59116)
- T_A = ambient temperature of the device
- Θ_{JA} = junction to air thermal impedance. (8)

See *Thermal Information* section. This parameter is highly dependent upon board layout.

Power dissipation in the device is determined by the LED current and the voltage at the $\overline{OUTx}$ pins. For example, if the LED current is 50 mA continuous through each channel and the output voltage is 1 V on each channel, then the total power dissipation is 50 mA x 1 V x 16 ch = 0.8 W

13 Device and Documentation Support

13.1 Trademarks

All trademarks are the property of their respective owners.

13.2 Electrostatic Discharge Caution

These devices have limited built-in ESD protection. The leads should be shorted together or the device placed in conductive foam during storage or handling to prevent electrostatic damage to the MOS gates.

13.3 Glossary

SLYZ022 — *TI Glossary*.

This glossary lists and explains terms, acronyms, and definitions.

14 Mechanical, Packaging, and Orderable Information

The following pages include mechanical, packaging, and orderable information. This information is the most current data available for the designated devices. This data is subject to change without notice and revision of this document. For browser-based versions of this data sheet, refer to the left-hand navigation.

Copyright © 2008–2014, Texas Instruments Incorporated

PACKAGING INFORMATION

Orderable Device	Status (1)	Package Type	Package Drawing	Pins	Package Qty	Eco Plan (2)	Lead/Ball Finish (6)	MSL Peak Temp (3)	Op Temp (°C)	Device Marking (4/5)	Samples
TLC59116IPWR	ACTIVE	TSSOP	PW	28	2000	Green (RoHS & no Sb/Br)	CU NIPDAU	Level-1-260C-UNLIM	-40 to 85	Y59116	Samples
TLC59116IPWRG4	ACTIVE	TSSOP	PW	28	2000	Green (RoHS & no Sb/Br)	CU NIPDAU	Level-1-260C-UNLIM	-40 to 85	Y59116	Samples
TLC59116IRHBR	ACTIVE	VQFN	RHB	32	3000	Green (RoHS & no Sb/Br)	CU NIPDAU	Level-2-260C-1 YEAR	-40 to 85	Y59116	Samples

(1) The marketing status values are defined as follows:
ACTIVE: Product device recommended for new designs.
LIFEBUY: TI has announced that the device will be discontinued, and a lifetime-buy period is in effect.
NRND: Not recommended for new designs. Device is in production to support existing customers, but TI does not recommend using this part in a new design.
PREVIEW: Device has been announced but is not in production. Samples may or may not be available.
OBSOLETE: TI has discontinued the production of the device.

(2) Eco Plan - The planned eco-friendly classification: Pb-Free (RoHS), Pb-Free (RoHS Exempt), or Green (RoHS & no Sb/Br) - please check http://www.ti.com/productcontent for the latest availability information and additional product content details.
TBD: The Pb-Free/Green conversion plan has not been defined.
Pb-Free (RoHS): TI's terms "Lead-Free" or "Pb-Free" mean semiconductor products that are compatible with the current RoHS requirements for all 6 substances, including the requirement that lead not exceed 0.1% by weight in homogeneous materials. Where designed to be soldered at high temperatures, TI Pb-Free products are suitable for use in specified lead-free processes.
Pb-Free (RoHS Exempt): This component has a RoHS exemption for either 1) lead-based flip-chip solder bumps used between the die and package, or 2) lead-based die adhesive used between the die and leadframe. The component is otherwise considered Pb-Free (RoHS compatible) as defined above.
Green (RoHS & no Sb/Br): TI defines "Green" to mean Pb-Free (RoHS compatible), and free of Bromine (Br) and Antimony (Sb) based flame retardants (Br or Sb do not exceed 0.1% by weight in homogeneous material)

(3) MSL, Peak Temp. - The Moisture Sensitivity Level rating according to the JEDEC industry standard classifications, and peak solder temperature.

(4) There may be additional marking, which relates to the logo, the lot trace code information, or the environmental category on the device.

(5) Multiple Device Markings will be inside parentheses. Only one Device Marking contained in parentheses and separated by a "~" will appear on a device. If a line is indented then it is a continuation of the previous line and the two combined represent the entire Device Marking for that device.

(6) Lead/Ball Finish - Orderable Devices may have multiple material finish options. Finish options are separated by a vertical ruled line. Lead/Ball Finish values may wrap to two lines if the finish value exceeds the maximum column width.

Important Information and Disclaimer: The information provided on this page represents TI's knowledge and belief as of the date that it is provided. TI bases its knowledge and belief on information provided by third parties, and makes no representation or warranty as to the accuracy of such information. Efforts are underway to better integrate information from third parties. TI has taken and

continues to take reasonable steps to provide representative and accurate information but may not have conducted destructive testing or chemical analysis on incoming materials and chemicals.
TI and TI suppliers consider certain information to be proprietary, and thus CAS numbers and other limited information may not be available for release.

In no event shall TI's liability arising out of such information exceed the total purchase price of the TI part(s) at issue in this document sold by TI to Customer on an annual basis.

TAPE AND REEL INFORMATION

REEL DIMENSIONS

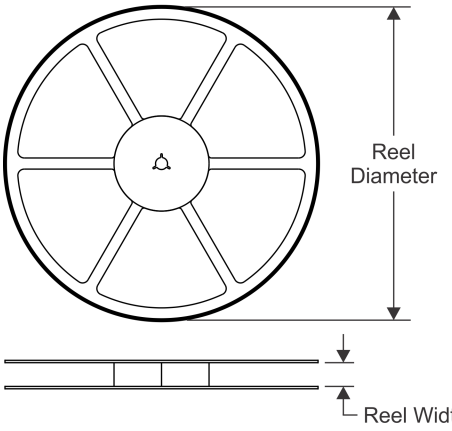

TAPE DIMENSIONS

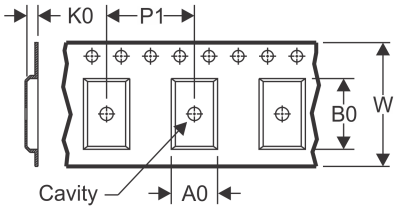

A0	Dimension designed to accommodate the component width
B0	Dimension designed to accommodate the component length
K0	Dimension designed to accommodate the component thickness
W	Overall width of the carrier tape
P1	Pitch between successive cavity centers

QUADRANT ASSIGNMENTS FOR PIN 1 ORIENTATION IN TAPE

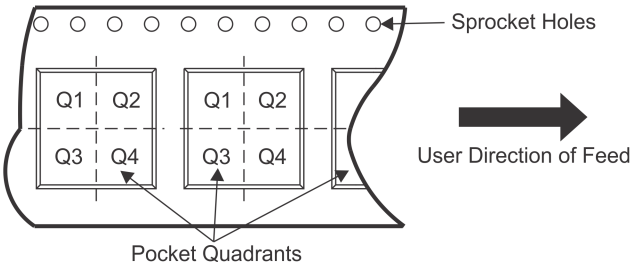

*All dimensions are nominal

Device	Package Type	Package Drawing	Pins	SPQ	Reel Diameter (mm)	Reel Width W1 (mm)	A0 (mm)	B0 (mm)	K0 (mm)	P1 (mm)	W (mm)	Pin1 Quadrant
TLC59116IPWR	TSSOP	PW	28	2000	330.0	16.4	6.9	10.2	1.8	12.0	16.0	Q1
TLC59116IRHBR	VQFN	RHB	32	3000	330.0	12.4	5.3	5.3	1.5	8.0	12.0	Q2

TAPE AND REEL BOX DIMENSIONS

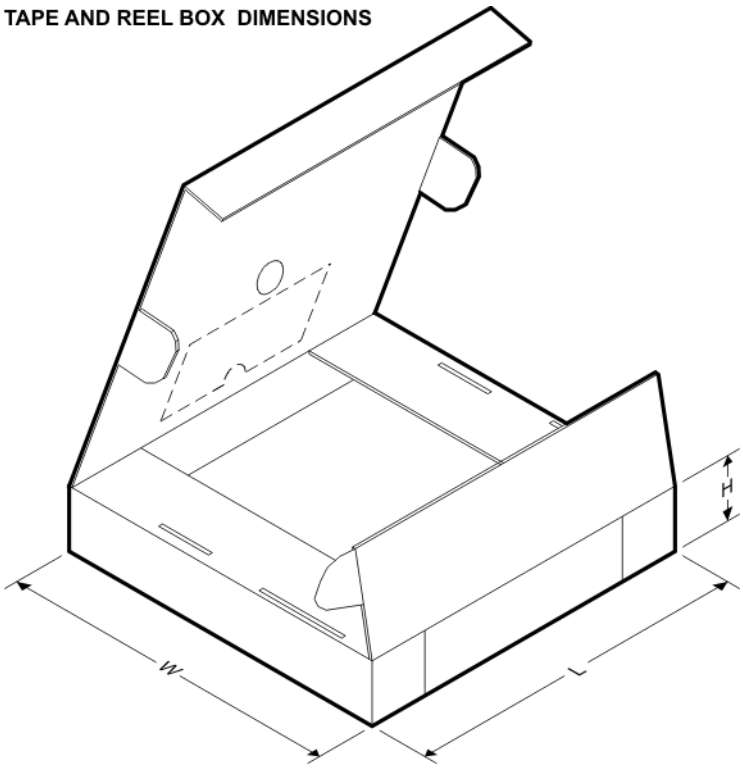

*All dimensions are nominal

Device	Package Type	Package Drawing	Pins	SPQ	Length (mm)	Width (mm)	Height (mm)
TLC59116IPWR	TSSOP	PW	28	2000	367.0	367.0	38.0
TLC59116IRHBR	VQFN	RHB	32	3000	367.0	367.0	35.0

PW (R-PDSO-G28) PLASTIC SMALL OUTLINE

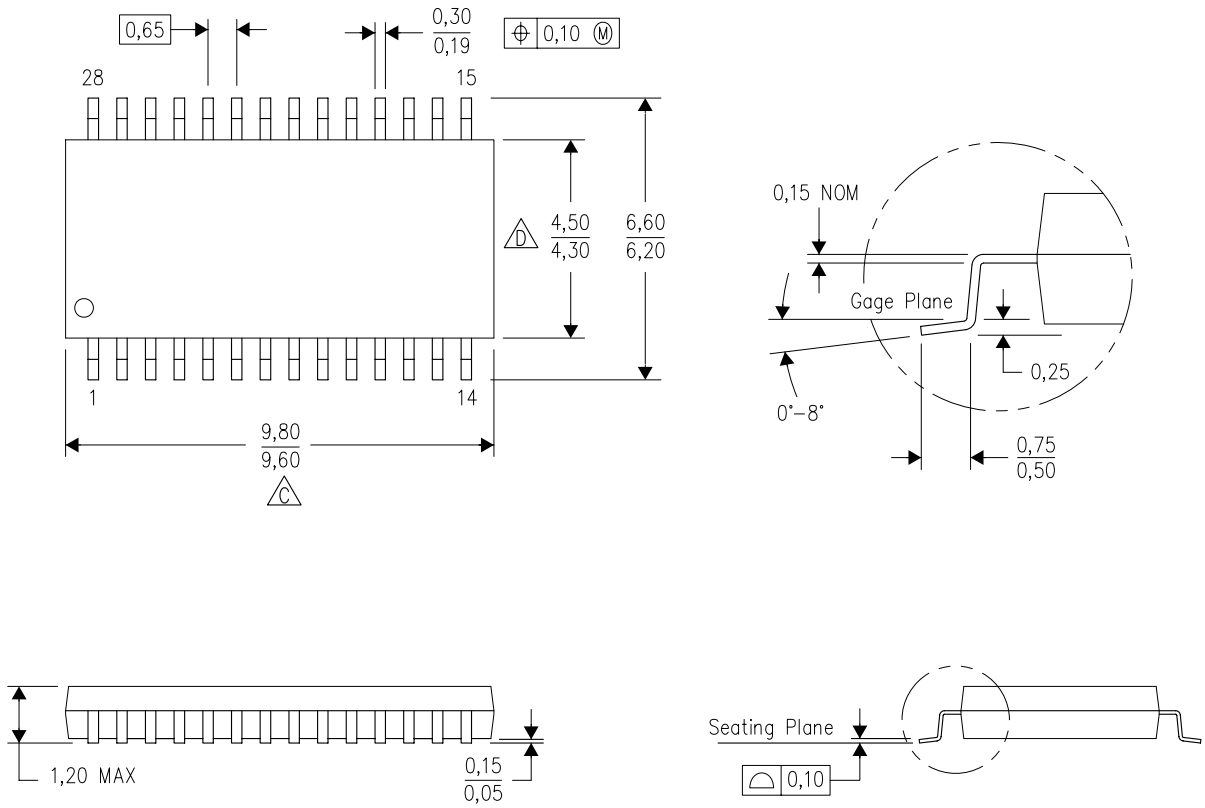

NOTES:
A. All linear dimensions are in millimeters. Dimensioning and tolerancing per ASME Y14.5M–1994.
B. This drawing is subject to change without notice.
C. Body length does not include mold flash, protrusions, or gate burrs. Mold flash, protrusions, or gate burrs shall not exceed 0,15 each side.
D. Body width does not include interlead flash. Interlead flash shall not exceed 0,25 each side.
E. Falls within JEDEC MO-153

PW (R-PDSO-G28) PLASTIC SMALL OUTLINE

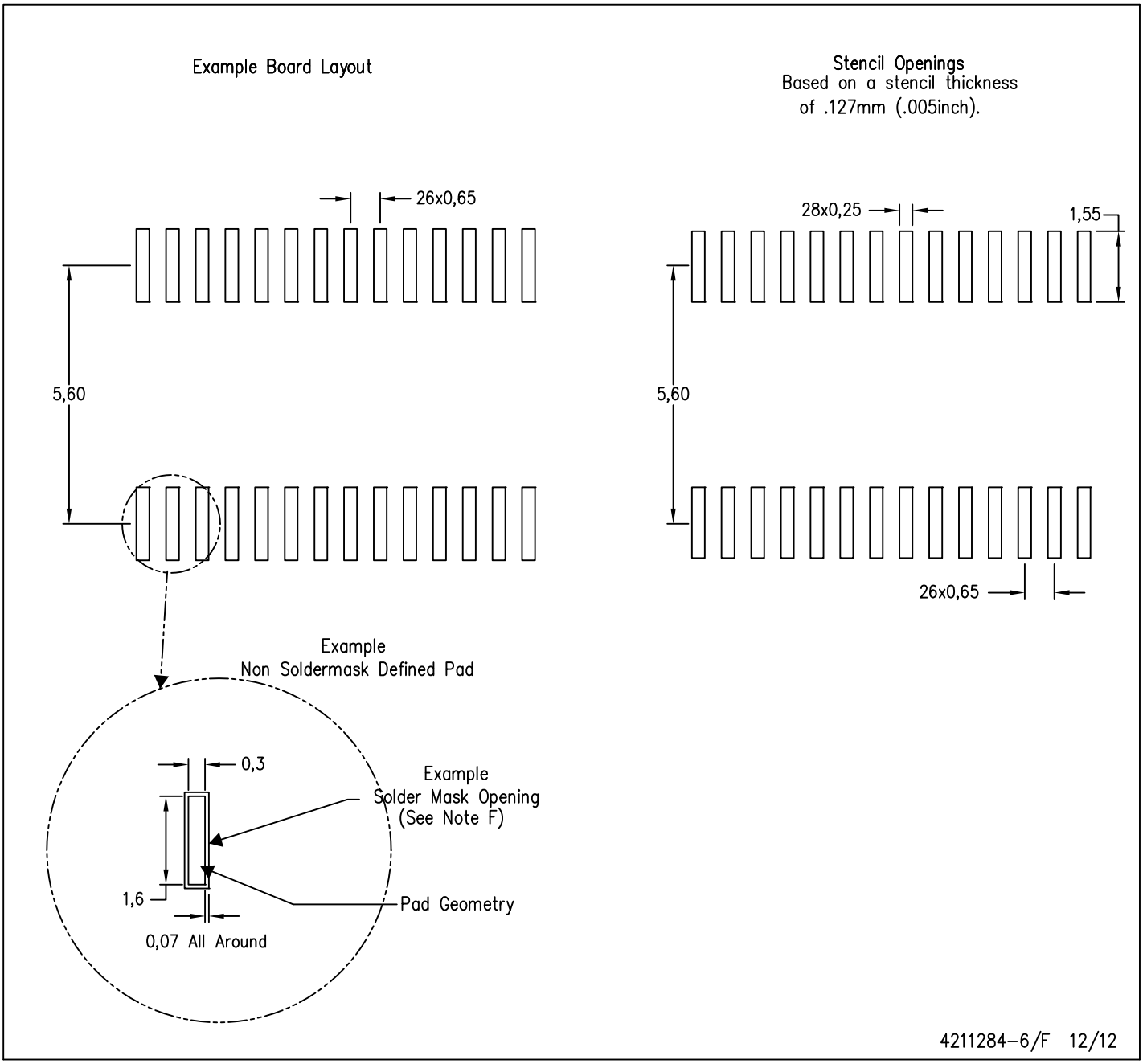

NOTES:
A. All linear dimensions are in millimeters.
B. This drawing is subject to change without notice.
C. Publication IPC-7351 is recommended for alternate design.
D. Laser cutting apertures with trapezoidal walls and also rounding corners will offer better paste release. Customers should contact their board assembly site for stencil design recommendations. Refer to IPC-7525 for other stencil recommendations.
E. Customers should contact their board fabrication site for solder mask tolerances between and around signal pads.

PW (R-PDSO-G28) PLASTIC SMALL OUTLINE

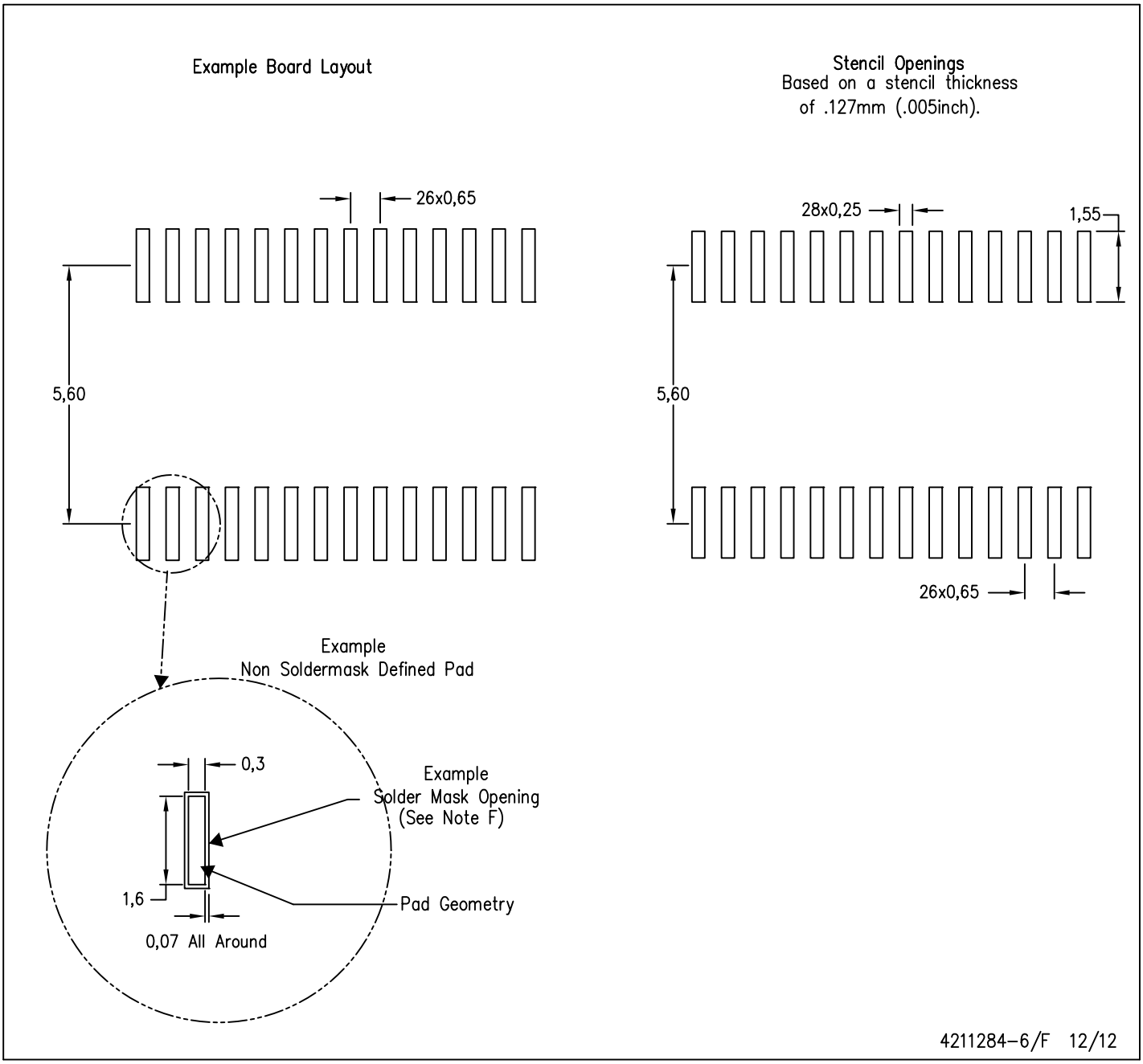

NOTES:
A. All linear dimensions are in millimeters.
B. This drawing is subject to change without notice.
C. Publication IPC-7351 is recommended for alternate design.
D. Laser cutting apertures with trapezoidal walls and also rounding corners will offer better paste release. Customers should contact their board assembly site for stencil design recommendations. Refer to IPC-7525 for other stencil recommendations.
E. Customers should contact their board fabrication site for solder mask tolerances between and around signal pads.

RHB (S–PVQFN–N32) PLASTIC QUAD FLATPACK NO–LEAD

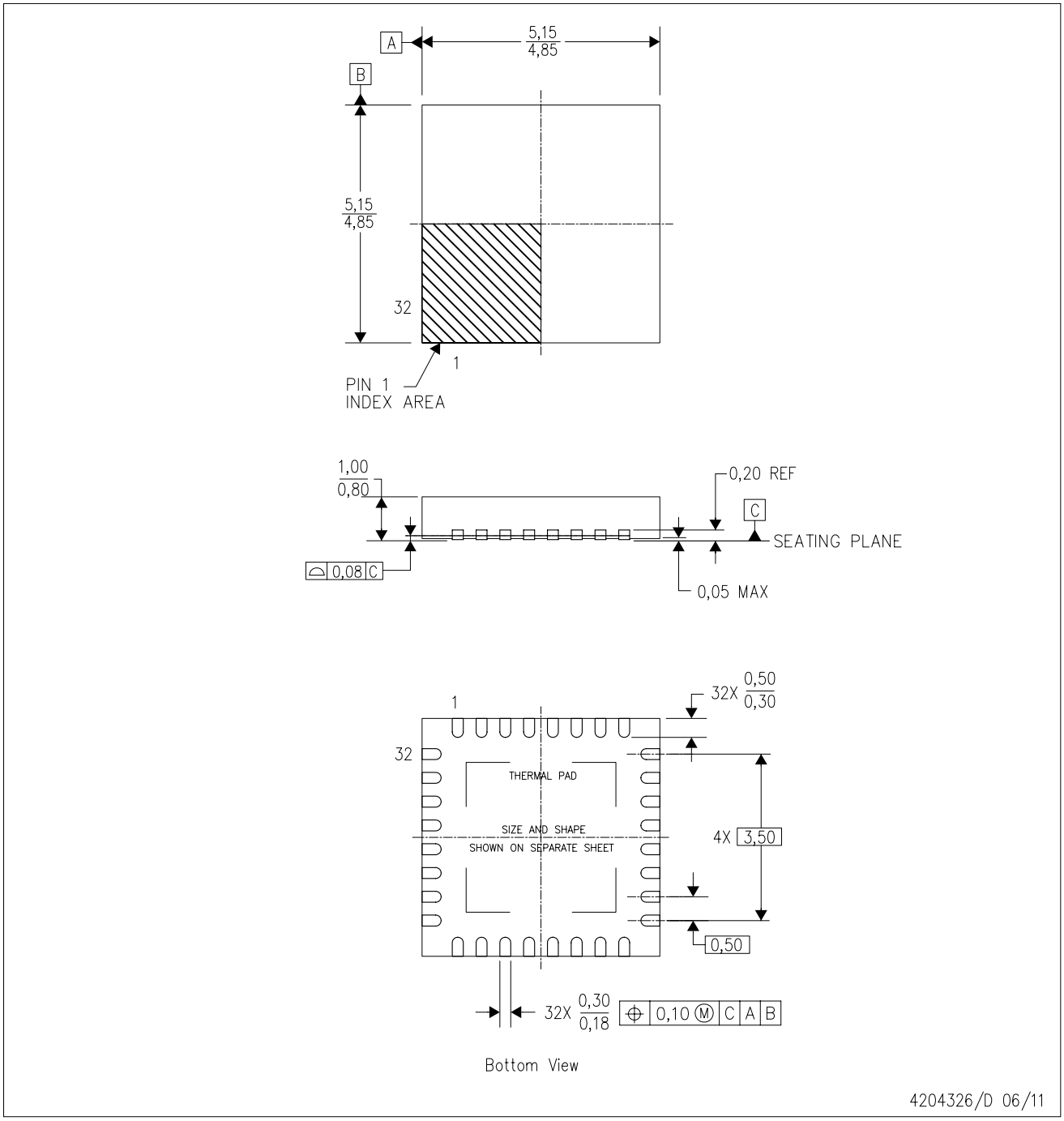

NOTES:
A. All linear dimensions are in millimeters. Dimensioning and tolerancing per ASME Y14.5M–1994.
B. This drawing is subject to change without notice.
C. QFN (Quad Flatpack No–Lead) Package configuration.
D. The package thermal pad must be soldered to the board for thermal and mechanical performance.
E. See the additional figure in the Product Data Sheet for details regarding the exposed thermal pad features and dimensions.
F. Falls within JEDEC MO–220.

RHB (S–PVQFN–N32) PLASTIC QUAD FLATPACK NO–LEAD

THERMAL INFORMATION

This package incorporates an exposed thermal pad that is designed to be attached directly to an external heatsink. The thermal pad must be soldered directly to the printed circuit board (PCB). After soldering, the PCB can be used as a heatsink. In addition, through the use of thermal vias, the thermal pad can be attached directly to the appropriate copper plane shown in the electrical schematic for the device, or alternatively, can be attached to a special heatsink structure designed into the PCB. This design optimizes the heat transfer from the integrated circuit (IC).

For information on the Quad Flatpack No–Lead (QFN) package and its advantages, refer to Application Report, QFN/SON PCB Attachment, Texas Instruments Literature No. SLUA271. This document is available at www.ti.com.

The exposed thermal pad dimensions for this package are shown in the following illustration.

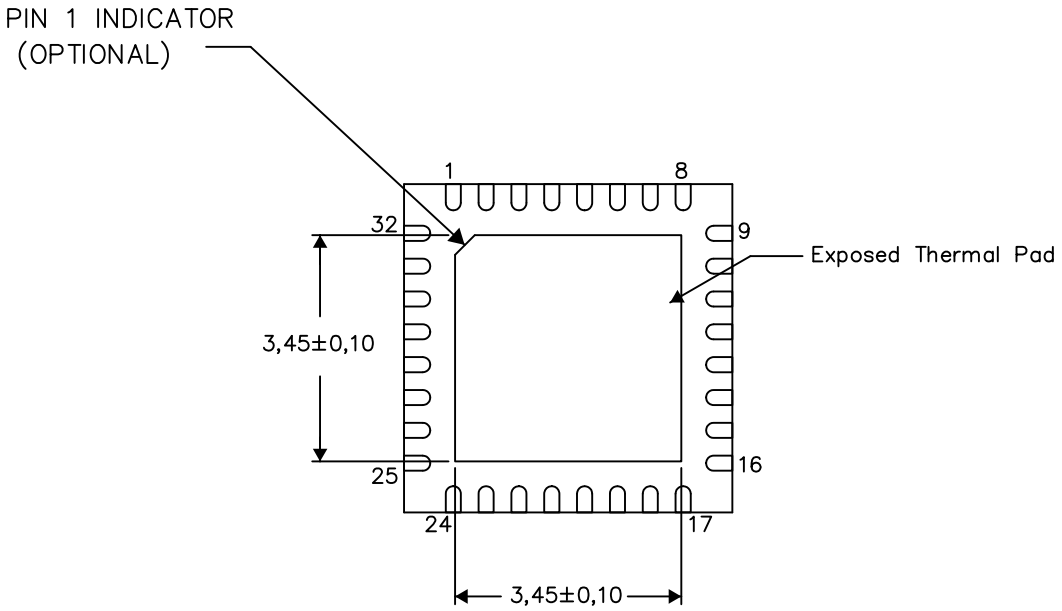

Bottom View

Exposed Thermal Pad Dimensions

4206356–2/AB 07/14

NOTE: A. All linear dimensions are in millimeters

RHB (S–PVQFN–N32) PLASTIC QUAD FLATPACK NO–LEAD

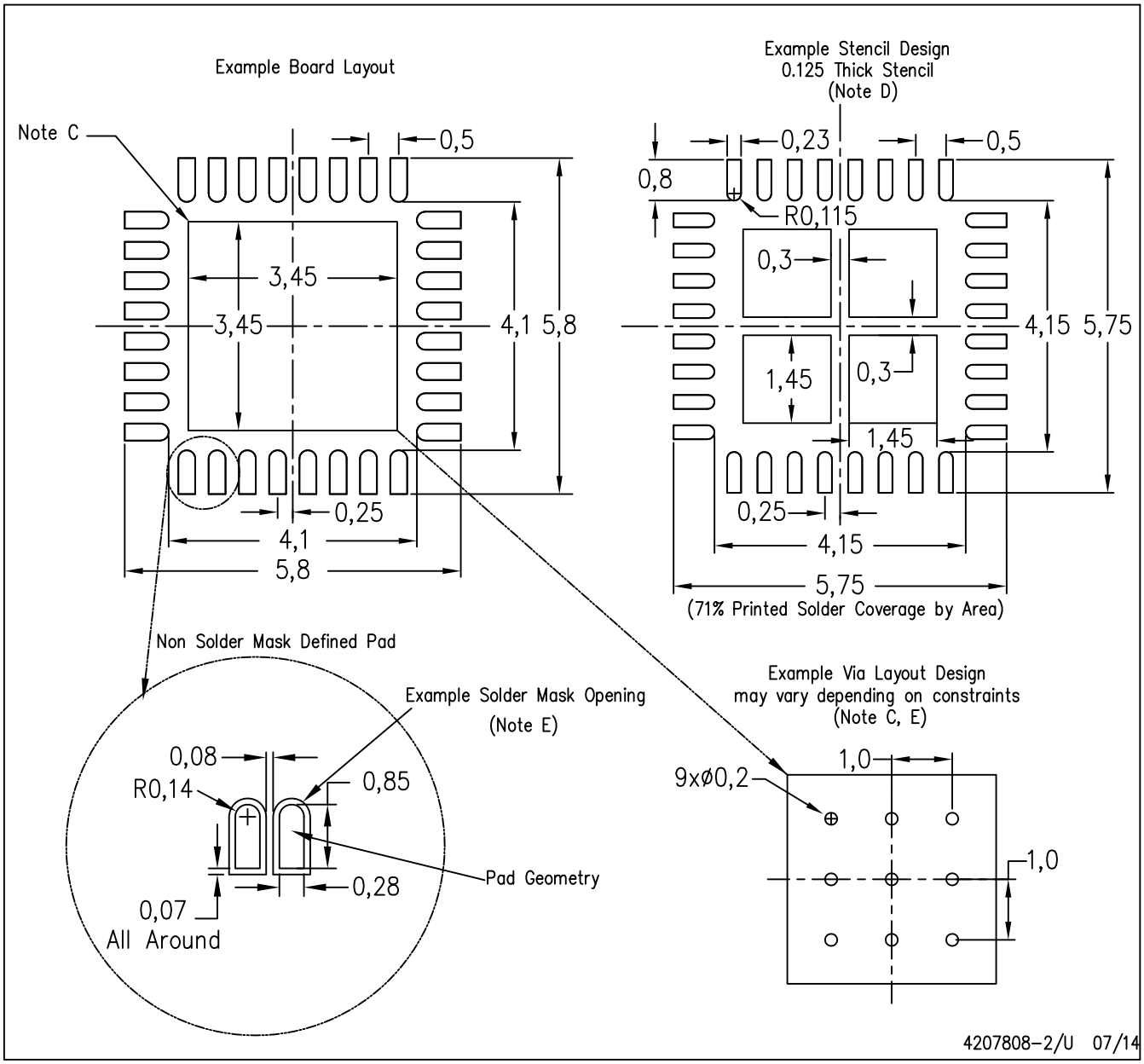

NOTES:
A. All linear dimensions are in millimeters.
B. This drawing is subject to change without notice.
C. This package is designed to be soldered to a thermal pad on the board. Refer to Application Note, Quad Flat–Pack Packages, Texas Instruments Literature No. SLUA271, and also the Product Data Sheets for specific thermal information, via requirements, and recommended board layout. These documents are available at www.ti.com <http://www.ti.com>.
D. Laser cutting apertures with trapezoidal walls and also rounding corners will offer better paste release. Customers should contact their board assembly site for stencil design recommendations. Refer to IPC 7525 for stencil design considerations.
E. Customers should contact their board fabrication site for recommended solder mask tolerances and via tenting recommendations for any larger diameter vias placed in the thermal pad.

IMPORTANT NOTICE

Texas Instruments Incorporated and its subsidiaries (TI) reserve the right to make corrections, enhancements, improvements and other changes to its semiconductor products and services per JESD46, latest issue, and to discontinue any product or service per JESD48, latest issue. Buyers should obtain the latest relevant information before placing orders and should verify that such information is current and complete. All semiconductor products (also referred to herein as “components”) are sold subject to TI’s terms and conditions of sale supplied at the time of order acknowledgment.

TI warrants performance of its components to the specifications applicable at the time of sale, in accordance with the warranty in TI’s terms and conditions of sale of semiconductor products. Testing and other quality control techniques are used to the extent TI deems necessary to support this warranty. Except where mandated by applicable law, testing of all parameters of each component is not necessarily performed.

TI assumes no liability for applications assistance or the design of Buyers’ products. Buyers are responsible for their products and applications using TI components. To minimize the risks associated with Buyers’ products and applications, Buyers should provide adequate design and operating safeguards.

TI does not warrant or represent that any license, either express or implied, is granted under any patent right, copyright, mask work right, or other intellectual property right relating to any combination, machine, or process in which TI components or services are used. Information published by TI regarding third-party products or services does not constitute a license to use such products or services or a warranty or endorsement thereof. Use of such information may require a license from a third party under the patents or other intellectual property of the third party, or a license from TI under the patents or other intellectual property of TI.

Reproduction of significant portions of TI information in TI data books or data sheets is permissible only if reproduction is without alteration and is accompanied by all associated warranties, conditions, limitations, and notices. TI is not responsible or liable for such altered documentation. Information of third parties may be subject to additional restrictions.

Resale of TI components or services with statements different from or beyond the parameters stated by TI for that component or service voids all express and any implied warranties for the associated TI component or service and is an unfair and deceptive business practice. TI is not responsible or liable for any such statements.

Buyer acknowledges and agrees that it is solely responsible for compliance with all legal, regulatory and safety-related requirements concerning its products, and any use of TI components in its applications, notwithstanding any applications-related information or support that may be provided by TI. Buyer represents and agrees that it has all the necessary expertise to create and implement safeguards which anticipate dangerous consequences of failures, monitor failures and their consequences, lessen the likelihood of failures that might cause harm and take appropriate remedial actions. Buyer will fully indemnify TI and its representatives against any damages arising out of the use of any TI components in safety-critical applications.

In some cases, TI components may be promoted specifically to facilitate safety-related applications. With such components, TI’s goal is to help enable customers to design and create their own end-product solutions that meet applicable functional safety standards and requirements. Nonetheless, such components are subject to these terms.

No TI components are authorized for use in FDA Class III (or similar life-critical medical equipment) unless authorized officers of the parties have executed a special agreement specifically governing such use.

Only those TI components which TI has specifically designated as military grade or “enhanced plastic” are designed and intended for use in military/aerospace applications or environments. Buyer acknowledges and agrees that any military or aerospace use of TI components which have ***not*** been so designated is solely at the Buyer's risk, and that Buyer is solely responsible for compliance with all legal and regulatory requirements in connection with such use.

TI has specifically designated certain components as meeting ISO/TS16949 requirements, mainly for automotive use. In any case of use of non-designated products, TI will not be responsible for any failure to meet ISO/TS16949.

Products		**Applications**	
Audio	www.ti.com/audio	Automotive and Transportation	www.ti.com/automotive
Amplifiers	amplifier.ti.com	Communications and Telecom	www.ti.com/communications
Data Converters	dataconverter.ti.com	Computers and Peripherals	www.ti.com/computers
DLP® Products	www.dlp.com	Consumer Electronics	www.ti.com/consumer-apps
DSP	dsp.ti.com	Energy and Lighting	www.ti.com/energy
Clocks and Timers	www.ti.com/clocks	Industrial	www.ti.com/industrial
Interface	interface.ti.com	Medical	www.ti.com/medical
Logic	logic.ti.com	Security	www.ti.com/security
Power Mgmt	power.ti.com	Space, Avionics and Defense	www.ti.com/space-avionics-defense
Microcontrollers	microcontroller.ti.com	Video and Imaging	www.ti.com/video
RFID	www.ti-rfid.com		
OMAP Applications Processors	www.ti.com/omap	**TI E2E Community**	e2e.ti.com
Wireless Connectivity	www.ti.com/wirelessconnectivity		

Mailing Address: Texas Instruments, Post Office Box 655303, Dallas, Texas 75265
Copyright © 2014, Texas Instruments Incorporated

AMEYA360
Components Supply Platform

Authorized Distribution Brand :

Website :

Welcome to visit www.ameya360.com

Contact Us :

- ## Address :

401 Building No.5, JiuGe Business Center, Lane 2301, Yishan Rd
Minhang District, Shanghai , China

- ## Sales :

Direct +86 (21) 6401-6692

Email amall@ameya360.com

QQ 800077892

Skype ameyasales1 ameyasales2

- ## Customer Service :

Email service@ameya360.com

- ## Partnership :

Tel +86 (21) 64016692-8333

Email mkt@ameya360.com