REV.	DATE	DESCRIPTION
NC	10/30/05	INITIAL RELEASE

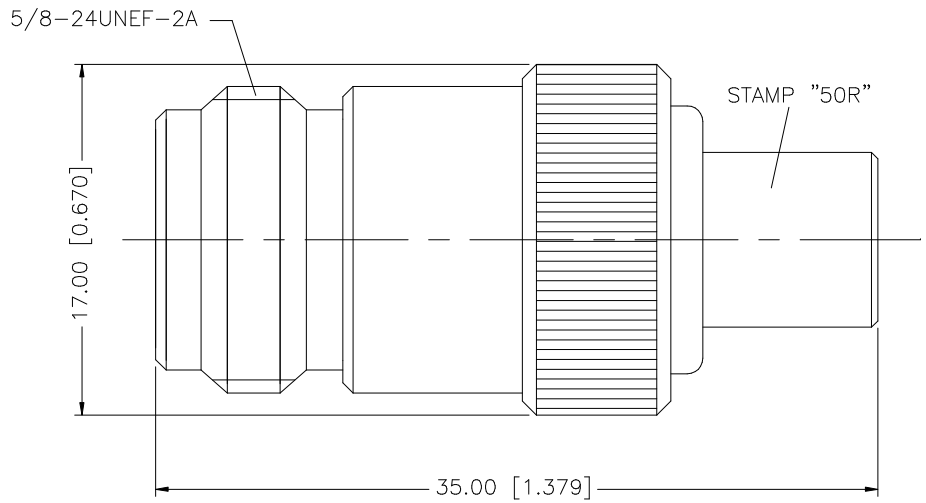

NOTE:

RESISTOR TOLERANCE
1 WATT 1% - 50ohm

	DESCRIPTION	MATERIAL	FINISH	QTY
8				
7				
6				
5	RIVET	BRASS	NICKEL	1
4	CHAIN	BRASS	NICKEL	1
3	CONTACT PIN	PHOS. BRONZE	GOLD	1
2	INSULATOR	TEFLON	NATURAL	1
1	SHELL/BODY	BRASS	NEXCOTE	1

UNLESS OTHERWISE SPECIFIED DIMENSIONS ARE IN MILLIMETERS. DIMENSIONS IN [ ] ARE IN INCHES AND FOR CUSTOMER REFERANCE ONLY.

UNLESS OTHERWISE SPECIFIED TOLERANCES FOR MILLIMETERS ARE:
0.5 - 8mm ± 0.20mm
8 - 30mm ± 0.40mm
30 - 120mm ± 0.50mm

UNLESS OTHERWISE SPECIFIED TOLERANCES FOR INCHES ARE:
.020 - .315 = ± 0.007"
.315 - 1.180 = ± 0.015"
1.180 - 4.724 = ± 0.020"

DO NOT SCALE DRAWING

APPROVALS		DATE
DRAWN	G.R.S.	10/30/05
CHECKED		
ISSUED		
SHEET	1 OF 1	
CAD FILE	C:/202/202110-.DWG	

Amphenol Connex

PART DESCRIPTION: N TERMINATOR JACK

PART NO.: 202110

DWG. NO.: 202110.DWG | REV.: NC | SIZE: A | SCALE: NA

AMEYA360
Components Supply Platform

Authorized Distribution Brand :

Website :

Welcome to visit www.ameya360.com

Contact Us :

- ### Address :

  401 Building No.5, JiuGe Business Center, Lane 2301, Yishan Rd
  Minhang District, Shanghai , China

- ### Sales :

  Direct +86 (21) 6401-6692

  Email amall@ameya360.com

  QQ 800077892

  Skype ameyasales1 ameyasales2

- ### Customer Service :

  Email service@ameya360.com

- ### Partnership :

  Tel +86 (21) 64016692-8333

  Email mkt@ameya360.com