ISSUE	AMENDMENT	DATE
1	ADD 32K RAM	99.10.14
2	UPDATE DRAWING	02.05.24
3	MODIFY DIMENSION ADD NOTES	02.12.16

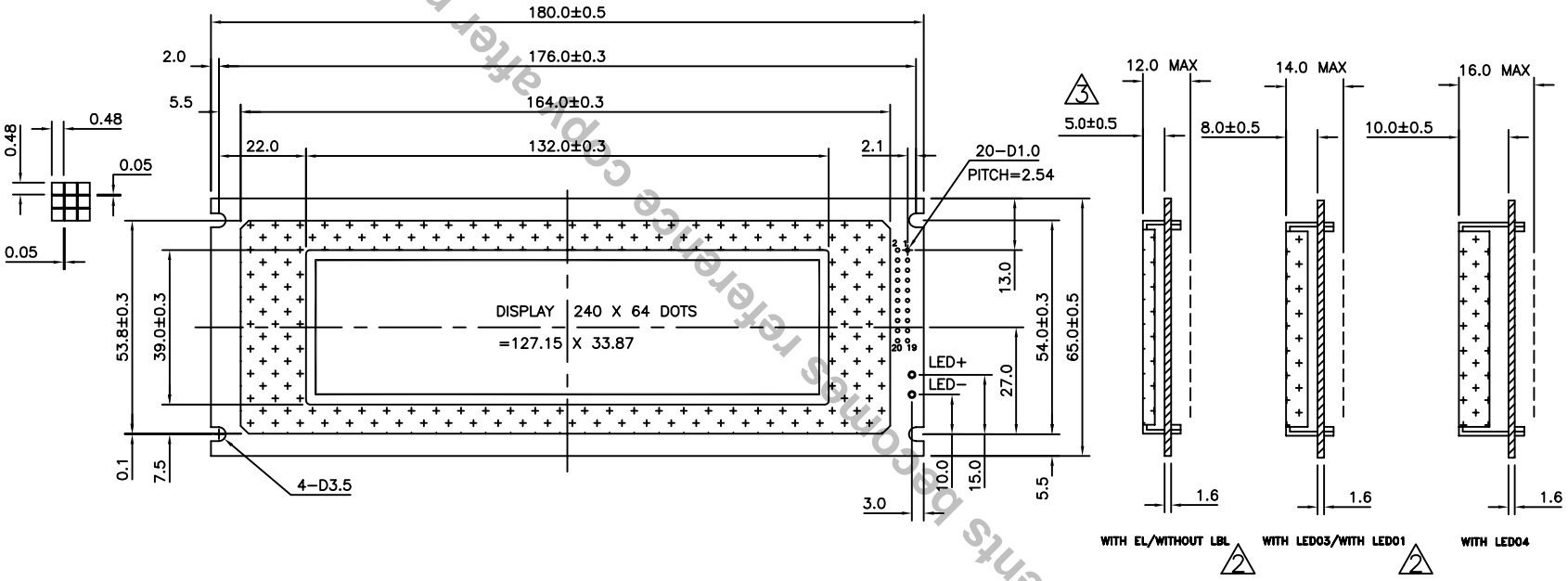

1	2	3	4	5	6	7	8	9	10	11	12	13	14	15	16	17	18	19	20
FG	VSS	VDD	V0	/WR	/RD	/CE	C/D	NC	/RST	DB0	DB1	DB2	DB3	DB4	DB5	DB6	DB7	FS	NC

NOTES:
- "◇" SPECIAL CHARACTERISTIC
- "+" SAFETY CHARACTERISTIC
- "()" REFERENCE ONLY
- "▽" CRITICAL DIMENSION

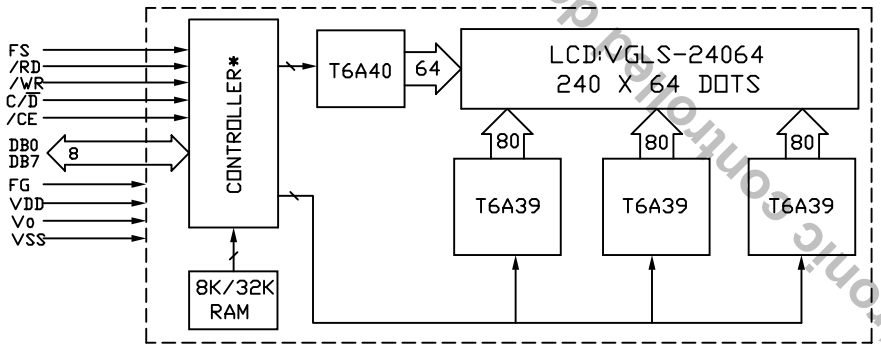

* T6963C OR EQUIVALENT

VARITRONIX LIMITED

TITLE: SPECIFICATION OF MODULE			
PROJECT NO: MGL(S)-24064			
TOLERANCE UNLESS OTHERWISE SPECIFIED:	X.X ±0.3 X.XX ±0.1		
DIMENSIONS IN MM			
MATERIAL:	FINISH:		
SCALE: DO NOT ON SCALE	THICKNESS:		
THIRD ANGLE PROJECTION			
	NAME	SIGE	DATE
DRAWN	LUO XIAN GANG		02.12.16
CHECKED	HE JIAN WEN		
APPROVED	DERRICK TAM		
ITEM NO. MGLS24064-XX			
DESCRIPTION: MGLS24064			
FILE NO: MGLS24064-XX R3.DWG			REV 3
SHEET 1 OF 1			

This electronic controlled documents becomes reference copy after printing out

AMEYA360
Components Supply Platform

Authorized Distribution Brand :

Website :

Welcome to visit www.ameya360.com

Contact Us :

Address :

401 Building No.5, JiuGe Business Center, Lane 2301, Yishan Rd
Minhang District, Shanghai , China

Sales :

Direct +86 (21) 6401-6692

Email amall@ameya360.com

QQ 800077892

Skype ameyasales1 ameyasales2

Customer Service :

Email service@ameya360.com

Partnership :

Tel +86 (21) 64016692-8333

Email mkt@ameya360.com