0805 SMD TYPE LED

VAOL-S8GT4

Features

- Fit automatic placement equipment.
- Fit Compatible with infrared and vapor phase reflow solder process.
- Pb-free.
- RoHS compliant.

Descriptions

- For higher packing density .
- For minature applications .
- Water clear lens .
- Chip material : AlGaInP .
- Emitting color : Yellow Green .

Package Outline Dimensions

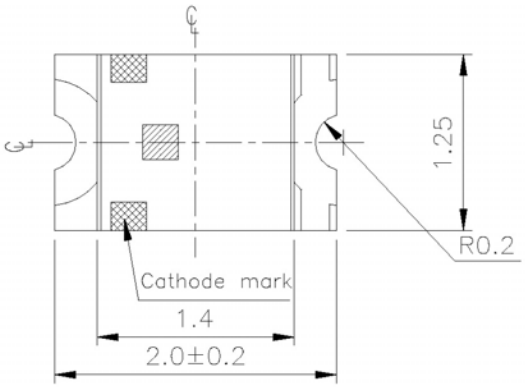

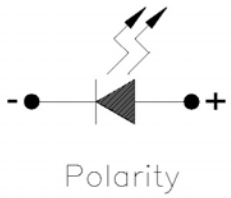

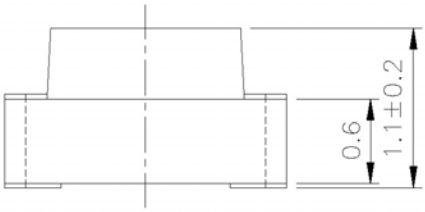

For reflow soldering

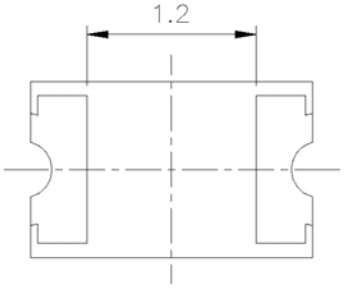

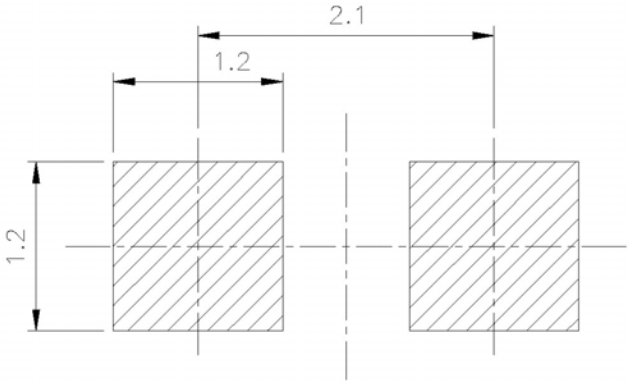

Note: The tolerances unless mentioned is ±0.1mm ,Unit = mm

www.vcclite.com
190 bosstick blvd, ste 101
san marcos, ca 92069
phone 760.560.1300
fax 760.560.1301

RoHS
ISO 9001 Registered

Absolute Maximum Ratings (Ta=25℃)

Parameter	Symbol	Rating	Unit
Reverse Voltage	V_R	5	V
Forward Current	I_F	25	mA
Operating Temperature	Topr	-40 ~ +85	℃
Storage Temperature	Tstg	-40~ +90	℃
Electrostatic Discharge(HBM)	ESD	2000	V
Power Dissipation	Pd	60	mW
Peak Forward Current (Duty 1/10 @1KHz)	I_{FP}	60	mA
Soldering Temperature	Tsol	Reflow Soldering : 260 ℃ for 10 sec. Hand Soldering : 350 ℃ for 3 sec.	

Electro-Optical Characteristics (Ta=25 ℃)

Parameter	Symbol	*Chip Rank	Min.	Typ.	Max.	Unit	Condition
Luminous Intensity	Iv	E1	12	17	-----	mcd	I_F=20 mA
		E2	17	23	-----		
		E3	22	31	-----		
		E4	27	41	-----		
Viewing Angle	$2\theta 1/2$	-----	-----	140	-----	deg	
Peak Wavelength	λp	-----	-----	575	-----	nm	
Dominant Wavelength	λd	-----	-----	573	-----	nm	
Spectrum Radiation Bandwidth	$\triangle\lambda$	-----	-----	20	-----	nm	
Forward Voltage	V_F	-----	1.7	2.0	2.4	V	
Reverse Current	I_R	-----	-----	-----	10	μA	V_R=5V

Specific binning requirements- please contact our home office

Typical Electro-Optical Characteristics Curves

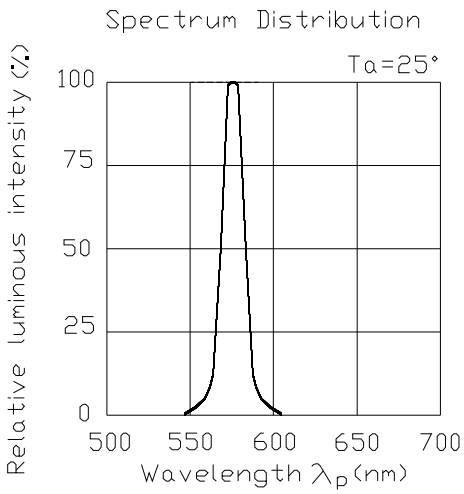

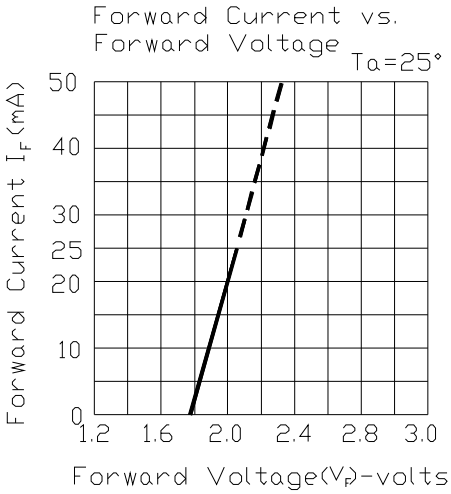

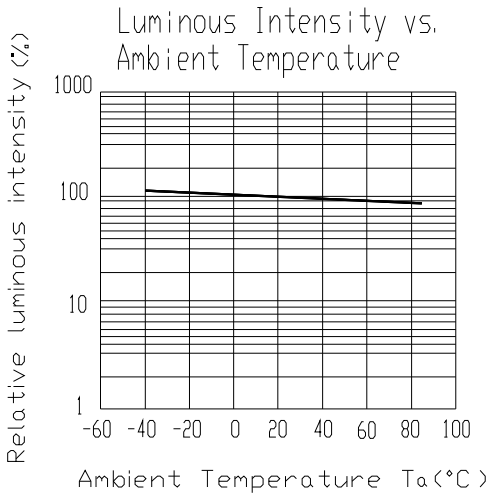

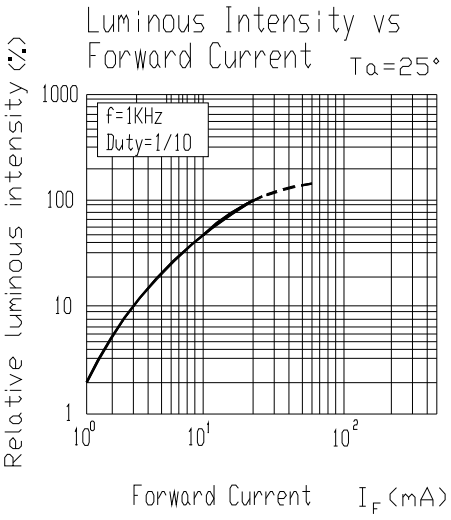

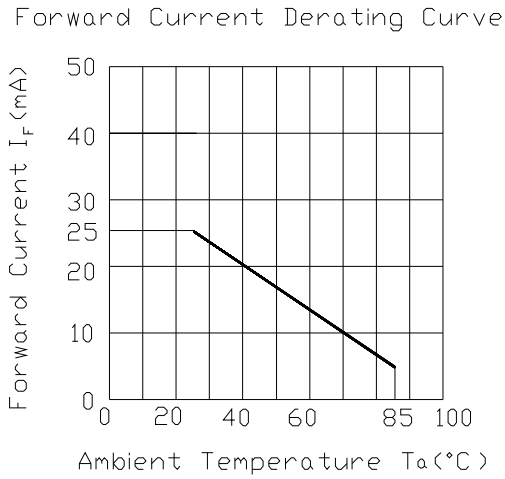

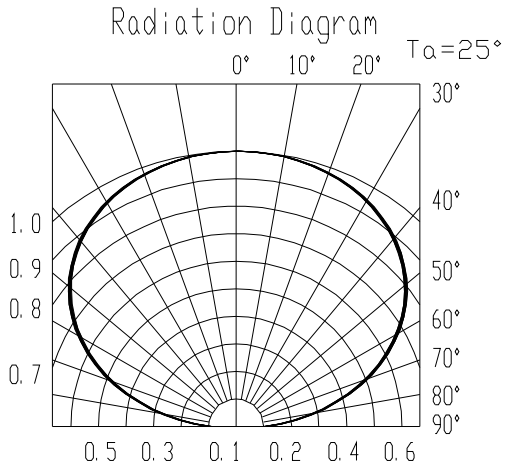

Reel Dimensions

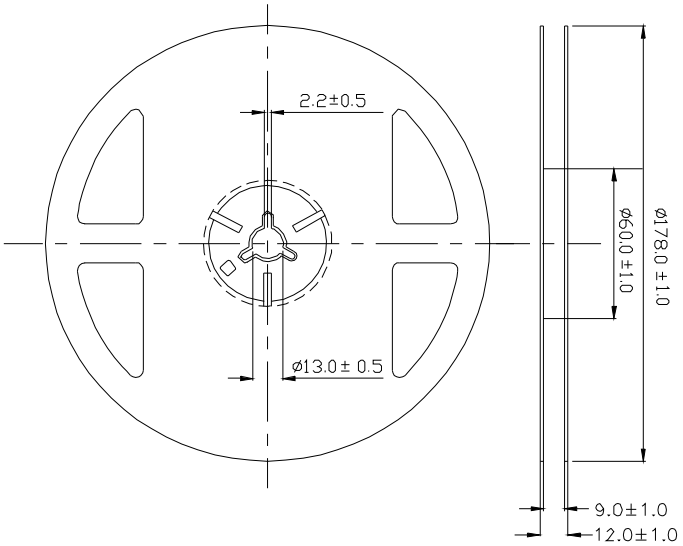

Note: The tolerances unless mentioned is ±0.1mm ,Unit = mm

Carrier Tape Dimensions: Loaded quantity3000 PCS per reel

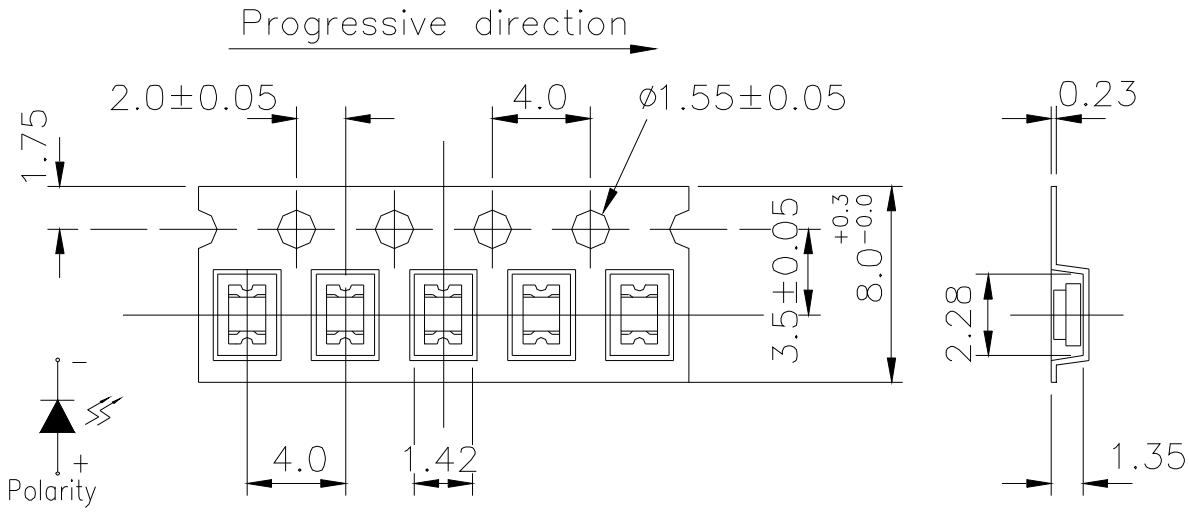

Note: The tolerances unless mentioned is ±0.1mm , Unit = mm

Moisture Resistant Packaging

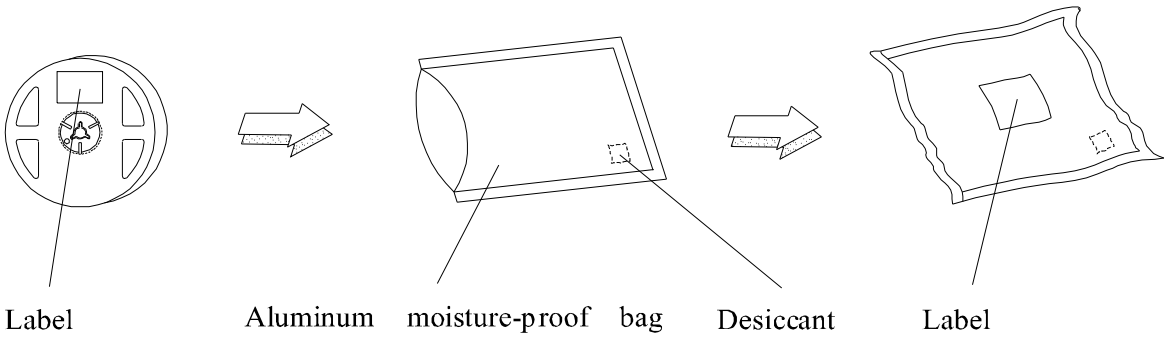

Soldering Condition

1.Pb-free solder temperature profile

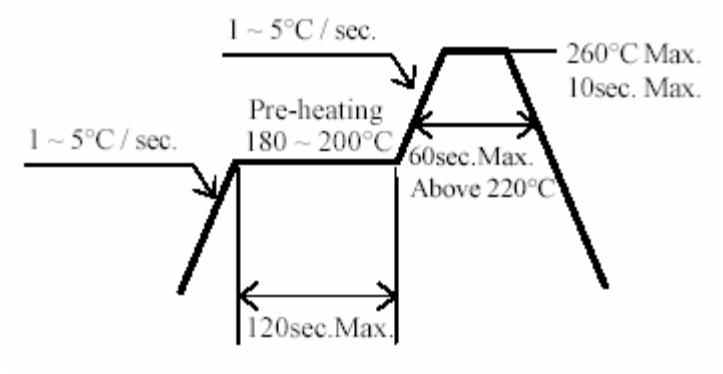

2.Reflow soldering should not be done more than two times.

3 When soldering, do not put stress on the LEDs during heating.

4 After soldering, do not warp the circuit board.

Soldering Iron

Each terminal is to go to the tip of soldering iron temperature less than 350℃ for 3 seconds within once in less than the soldering iron capacity 25W. Leave two seconds and more intervals, and do soldering of each terminal. Be careful because the damage of the product is often started at the time of the hand solder.

AMEYA360
Components Supply Platform

Authorized Distribution Brand :

Website :

Welcome to visit www.ameya360.com

Contact Us :

Address :

401 Building No.5, JiuGe Business Center, Lane 2301, Yishan Rd
Minhang District, Shanghai , China

Sales :

Direct +86 (21) 6401-6692

Email amall@ameya360.com

QQ 800077892

Skype ameyasales1 ameyasales2

Customer Service :

Email service@ameya360.com

Partnership :

Tel +86 (21) 64016692-8333

Email mkt@ameya360.com