REVISION(S)			
LTR	DESCRIPTION	INIT	APP'D
O	ECN: 0S60-0072-05	E.T 3/11/05	B.P 6/15/05
A	ECR-06-014978	E.T 6/29/06	V.K 6/30/06

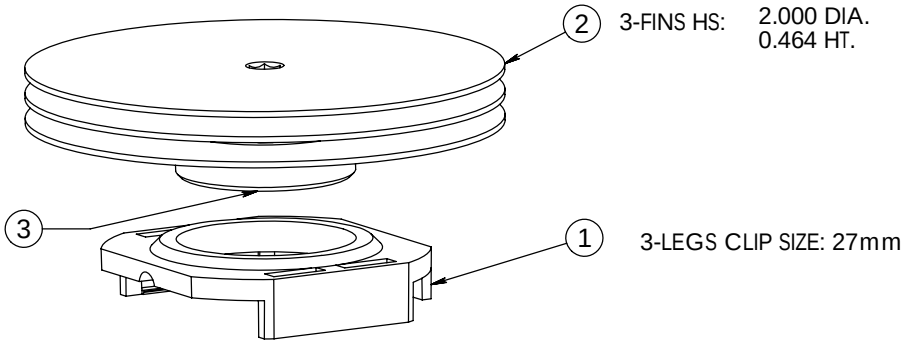

1. MATERIAL:

   HEAT SINK: ALUM. (BLACK ANODIZE)
   CLIP: BLACK PEI (UL94-VO)

2. BEFORE THE HEATSINK APPLICATION, THE USER SHOULD IDENTIFY THE SPECIFICATION OF MAXIMUM LOAD ON THE BGA PACKAGE.

   HEATSINK TORQUE SPECIFICATIONS CONVERTED TO FORCE.

   BARE DIE PACKAGE:
   1.5 POUND-FORCE INCH TORQUE = 7.5 POUND-FORCE
   (0.17 NEWTON TORQUE = 33.36 NEWTON)

   2.0 POUND-FORCE INCH TORQUE = 10.0 POUND-FORCE
   (0.23 NEWTON METER TORQUE = 44.48 NEWTON)

   FULL SIZE LID PACKAGE:
   1.5 POUND-FORCE INCH TORQUE = 6.9 POUND-FORCE
   (0.17 NEWTON TORQUE = 30.69 NEWTON)

   2.0 POUND-FORCE INCH TORQUE = 9.3 POUND-FORCE
   (0.23 NEWTON METER TORQUE = 41.37 NEWTON)

3. REMOVE CLIP WITH REMOVAL TOOL P/N: 1542616-1.

4. RoHS COMPLIANT AND CERTIFIED.

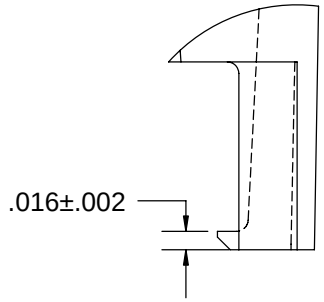

DETAIL A
SCALE=6X

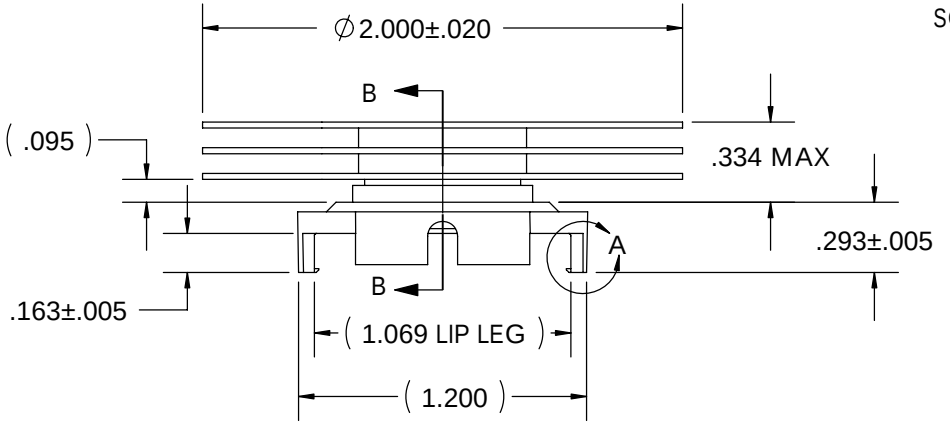

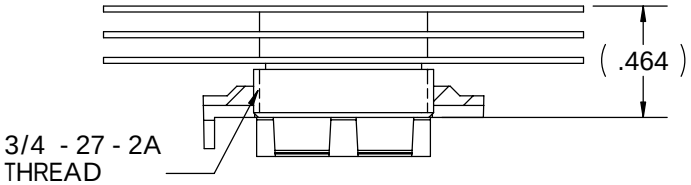

SECTION B-B

CUSTOMER DRAWING

SPECIFICATIONS ARE SUBJECT TO CHANGE WITHOUT NOTICE

ITEM	DESCRIPTION	QTY
1	MOUNTING CLIP	1
2	HEAT SINK	1
3	INTERFACE	1

DO NOT SCALE

tyco / Electronics Attleboro Falls Massachussetts 02763

UNLESS OTHERWISE SPECIFIED TOLERANCES ARE:
.XX ± .
.XXX ± .
.XXXX ± .
ANGLES ± °

DRAWN BY: E.TAO
DATE: 3/10/05
ENGINEER: B.PETROCELLI
DATE: 6/15/05
FILENAME
PROJECT
SYSTEM

MATERIAL: SEE NOTE
FINISH: SEE NOTE

CONFIDENTIAL PROPERTY OF TYCO ELECTRONICS. NOT TO BE DISCLOSED TO OTHERS. REPRODUCED OR USED FOR ANY PURPOSES EXCEPT AS AUTHORIZED IN WRITING BY AN AUTHORIZED OFFICIAL OF TYCO. MUST BE RETURNED TO TYCO ON DEMAND, ON COMPLETION OF ORDERS OR OTHER PURPOSES FOR WHICH LENT.

TITLE: **27mm HEATSINK ASSEMBLY**

DIMENSONS ARE IN: INCHES
TNIRD ANGLE PROJECTION
SCALE: 1.25:1
SIZE: A
PART NO: **8-1542007-9**
DWG. NO. **C-8-1542007-9**
SHEET: 1 OF 1
REV: A

AMEYA360
Components Supply Platform

Authorized Distribution Brand :

Website :

Welcome to visit www.ameya360.com

Contact Us :

- ### Address :

  401 Building No.5, JiuGe Business Center, Lane 2301, Yishan Rd
  Minhang District, Shanghai , China

- ### Sales :

  Direct +86 (21) 6401-6692

  Email amall@ameya360.com

  QQ 800077892

  Skype ameyasales1 ameyasales2

- ### Customer Service :

  Email service@ameya360.com

- ### Partnership :

  Tel +86 (21) 64016692-8333

  Email mkt@ameya360.com