DATE	DESCRIPTION	REV.
9.14.4	CHANGE AS PER ECN 14-103	A

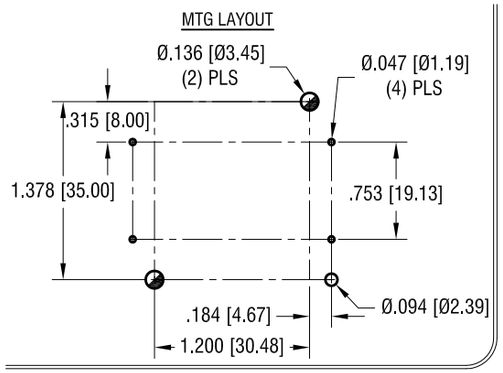

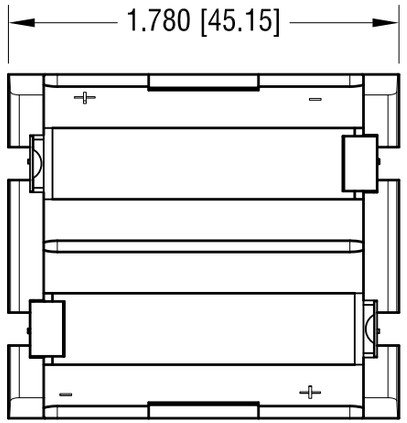

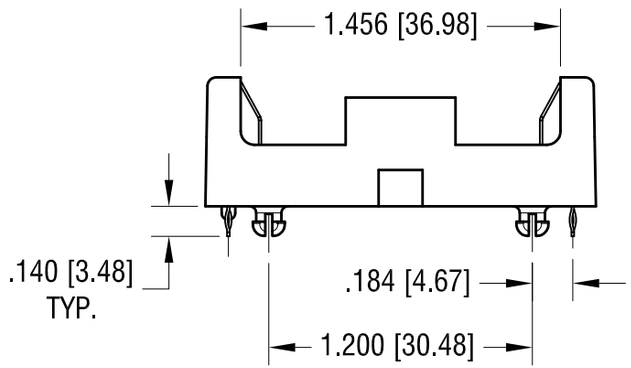

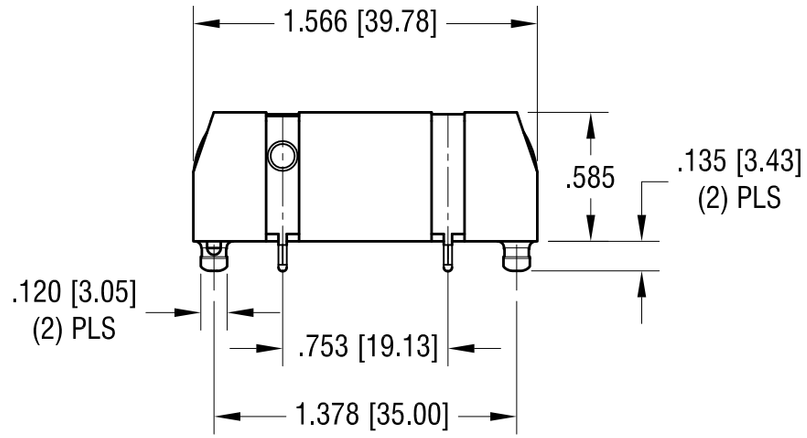

NOTE:

1. BASE:
   MAT'L: HEAT RESISTANCE NYLON
   STANYL 46 OR EQUIVALENT
2. CONTACT:
   MAT'L: .012 THK STAINLESS STEEL
   FINISH: TIN NICKEL PLATE.

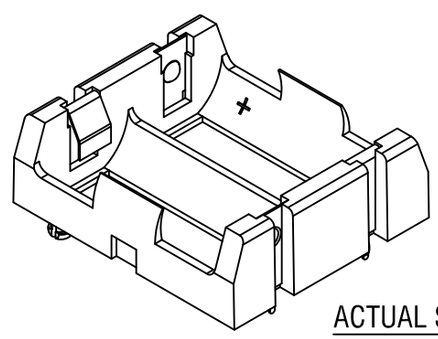

ACTUAL SIZE

THIS DOCUMENT IS THE PROPERTY OF KEYSTONE ELECTRONICS CORP. AND SHALL NOT BE REPRODUCED, DISTRIBUTED OR USED AS A BASIS FOR MANUFACTURE WITHOUT PRIOR WRITTEN PERMISSION FROM KEYSTONE ELECTRONICS CORP.

KEYSTONE ELECTRONICS CORP.
www.keyelco.com • ASTORIA, N.Y. 11105-2017 • Tel (718) 956-8900

PART NAME: DUAL THM POLARIZED HOLDER

MATERIAL: AS NOTED

FINISH: AS NOTED

DRN BY: NT | DATE: 7.28.14

APP'D: LN | SCALE: 1.25X

TOLERANCES INCH [MM]
DECIMAL ± .005 [±]
ANGULAR ± 1°
UNLESS OTHERWISE SPECIFIED

CODE: C

DWG NO. 1097P

AMEYA360
Components Supply Platform

Authorized Distribution Brand :

Website :

Welcome to visit www.ameya360.com

Contact Us :

- ### Address :

  401 Building No.5, JiuGe Business Center, Lane 2301, Yishan Rd
  Minhang District, Shanghai , China

- ### Sales :

  Direct +86 (21) 6401-6692

  Email amall@ameya360.com

  QQ 800077892

  Skype ameyasales1 ameyasales2

- ### Customer Service :

  Email service@ameya360.com

- ### Partnership :

  Tel +86 (21) 64016692-8333

  Email mkt@ameya360.com