T Series
Subminiature Rocker Switches

Features/Benefits

- ***Compact size—small footprint***
- ***Single and double pole models***
- ***PC and panel mounting options available***
- ***RoHS compliant***

Typical Applications

- ***Telecommunications***
- ***Instrumentation***
- ***Medical Equipment***

Models Available

Specifications

CONTACT RATING: Q contact material (TX01 models): 3 AMPS @ 120 V AC or 28 V DC. All other models: 2 AMPS @ 120 V AC or 28 V DC. See page G-50 for additional ratings.

ELECTRICAL LIFE: TX01 models: 60,000 make-and-break cycles at full load. All other models: 30,000 cycles.

CONTACT RESISTANCE: Below 20 m Ω typ. initial @ 2–4 V DC, 100 mA, for both silver and gold plated contacts.

INSULATION RESISTANCE: 10^9 Ω min.

DIELECTRIC STRENGTH: 1000 Vrms min. @ sea level.

OPERATING TEMPERATURE: –30ºC to 85ºC.

SOLDERABILITY: Per MIL-STD-202F method 208D, or EIA RS-186E method 9 (1 hour steam aging).

NOTE: Any models supplied with B, G, P, Q or R contact material are RoHS compliant.

NOTE: Specifications and materials listed above are for switches with standard options. For information on specific and custom switches, consult Customer Service Center.

Materials

CASE: Glass filled nylon 6/6, flame retardant, heat stabilized or diallyl phthalate (DAP), (UL 94V-0) or glass filled nylon 4/6, flame retardant, heat stabilized.

ACTUATOR: Nylon, black standard.

BUSHING: Brass, nickel plated.

HOUSING: Stainless steel.

SWITCH SUPPORT: Brass, matte-tin plated.

MOUNTING BRACKET: Stainless steel.

END CONTACTS: B contact material: Copper alloy, with gold plate over nickel plate. Q contact material: Coin silver, silver plated. See page G-50 for additional contact materials.

CENTER CONTACTS & TERMINALS: B contact material: Copper alloy, with gold plate over nickel plate. Q contact material: Copper alloy, silver plated. See page G-53 for additional contact materials.

TERMINAL SEAL: Epoxy.

HARDWARE: Nut, Screws & Lockwasher: Stainless steel. Standoff: Nylon standard.

Build-A-Switch

To order, simply select desired option from each category and place in the appropriate box. Available options are shown and described on pages G-47 through G-51. For additional options not shown in catalog, consult Customer Service Center. All models have epoxy terminal seal and are compatible with all “bottom-wash” PCB cleaning methods.

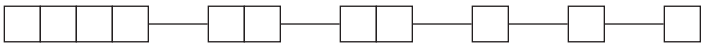

Switch Function
- **T101** SP On-None-On
- **T102** SP Off-None-On
- **T103** SP On-Off-On
- **T105** SP Mom.-Off-Mom.
- **T107** SP On-Off-Mom.
- **T201** DP On-None-On
- **T205** DP Mom.-Off-Mom.

Actuator
- **J1** Rocker, .300" wide
- **J6** Rocker, .230" wide

Terminations
- **A** Right angle, PC thru-hole
- **AV** Vertical Right angle, PC thru-hole
- **Z** Solder lug
- **V3** V-bracket

Contact Material
- **B** Gold
- **P** Gold, matte-tin
- **Q** Silver
- **G** Gold over silver
- **R** Gold over silver, matte-tin

Seal
- **E** Epoxy

Actuator Color
- **2** Black

Dimensions are shown: Inches (mm)
Specifications and dimensions subject to change

SWITCH FUNCTION

ACTUATOR COLOR

NO. POLES	MODEL NO.	SWITCH FUNCTION POS. 1	SWITCH FUNCTION POS. 2	SWITCH FUNCTION POS. 3	CONNECTED TERMINALS POS. 1	CONNECTED TERMINALS POS. 2	CONNECTED TERMINALS POS. 3	SCHEMATIC
		C&K marking on opposite side			C&K marking on opposite side			
SP	T101	ON	NONE	ON	2-3	N/A	2-1	SPDT
	T103	ON	OFF	ON		OPEN		
	T105	MOM.	OFF	MOM.				
	T107	ON	OFF	MOM.				
	T102	OFF	NONE	ON	OPEN	N/A	3-1	SPST

SPDT

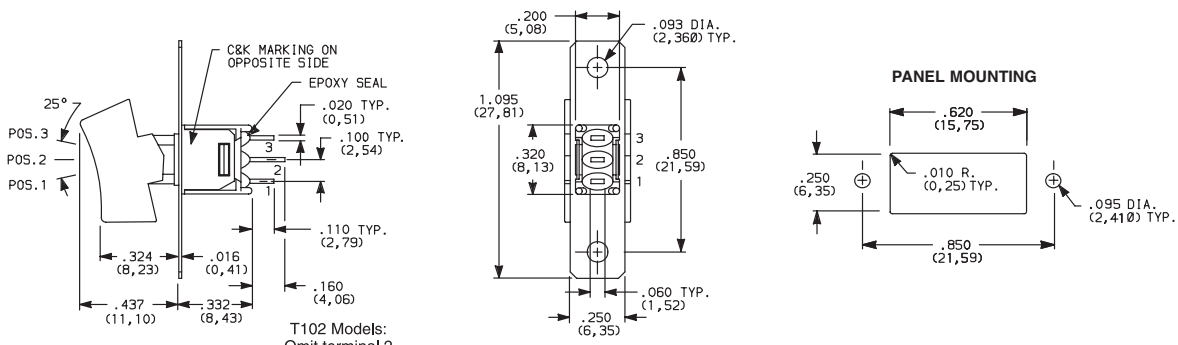

T102 Models: Omit terminal 2

Terminal Nos. For Reference Only

Part number shown: T101J6ZBE2

DP	T201	ON	NONE	ON	2-3,5-6	N/A	2-1,5-4	DPDT
	T205	MOM.	OFF	MOM.		OPEN		

DPDT

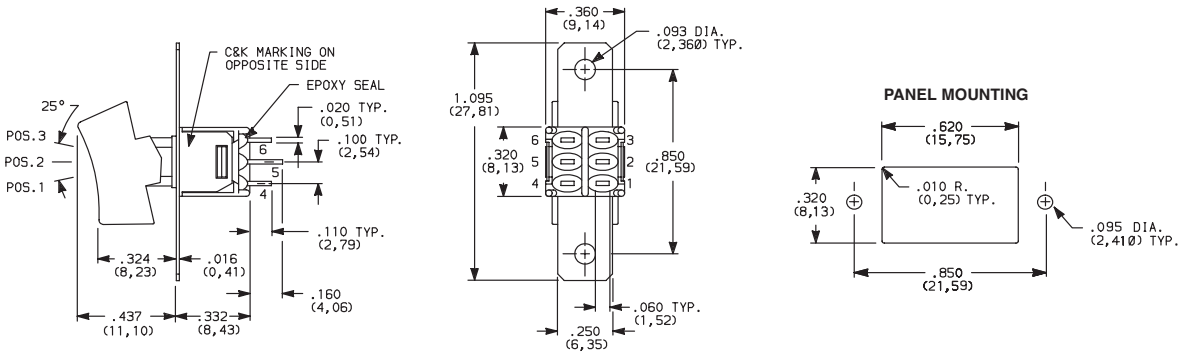

Terminal Nos. For Reference Only

Part number shown: T201J1ZBE2

MOM. = Momentary

All models ® with all options when ordered with G, Q or R contact material.

Rocker

Third Angle Projection

Dimensions are shown: Inches (mm)
Specifications and dimensions subject to change

T Series
Subminiature Rocker Switches

ACTUATOR

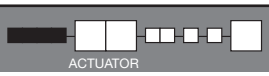

J1 ROCKER, .300 WIDE

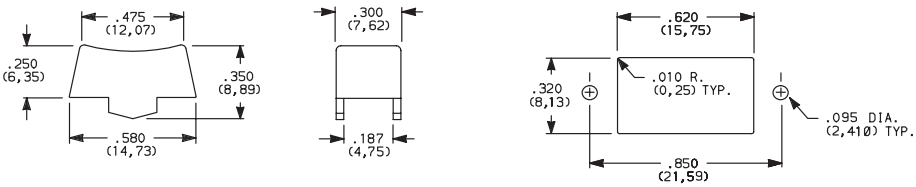

Standard with all models except T10X with A terminations.

J6 ROCKER, .230 WIDE

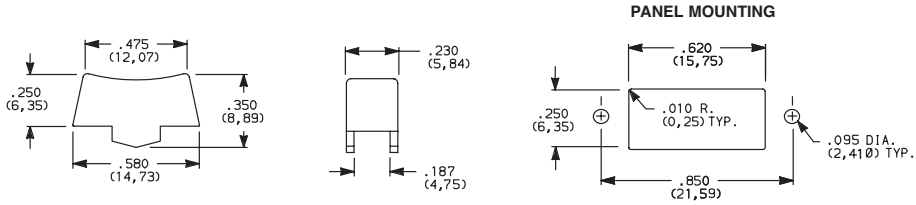

Standard with T10X model with A terminations.

OPTION CODE	ACTUATOR COLOR
2	BLACK

Actuators available separately, see page G 51-G53. Finish: Matte. Other colors, custom actuator markings and legends available, consult Customer Service Center.

TERMINATIONS

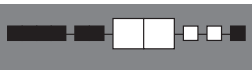

Z SOLDER LUG

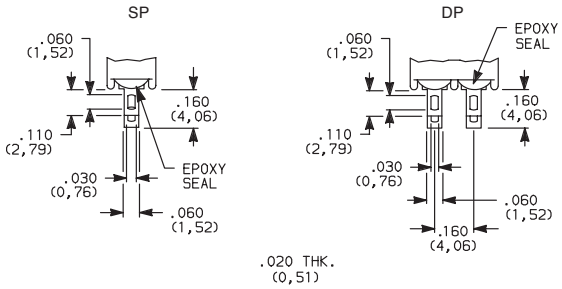

SP and DP

Not available with P or R contact material.

A RIGHT ANGLE, PC THRU-HOLE

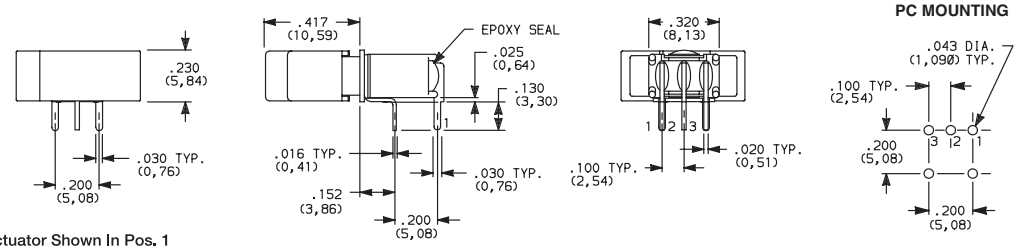

Actuator Shown In Pos. 1

T101J6ABE2
Horizontal Actuation
SPDT

Not available with T102 model. J6 actuator standard only on T10X models with A terminations.

Third Angle Projection

Dimensions are shown: Inches (mm)
Specifications and dimensions subject to change

TERMINATIONS

A RIGHT ANGLE, PC THRU-HOLE

T201J1ABE2
Horizontal Actuation
DPDT

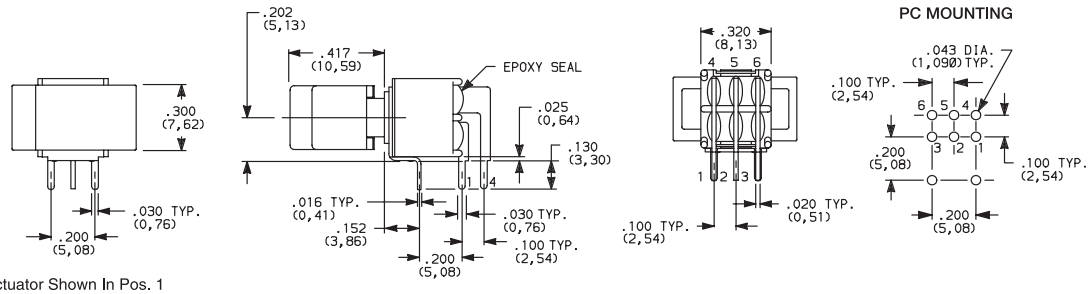

Actuator Shown In Pos. 1

AV VERTICAL RIGHT ANGLE, PC THRU-HOLE

T101J1AVBE2
Vertical Actuation
SPDT

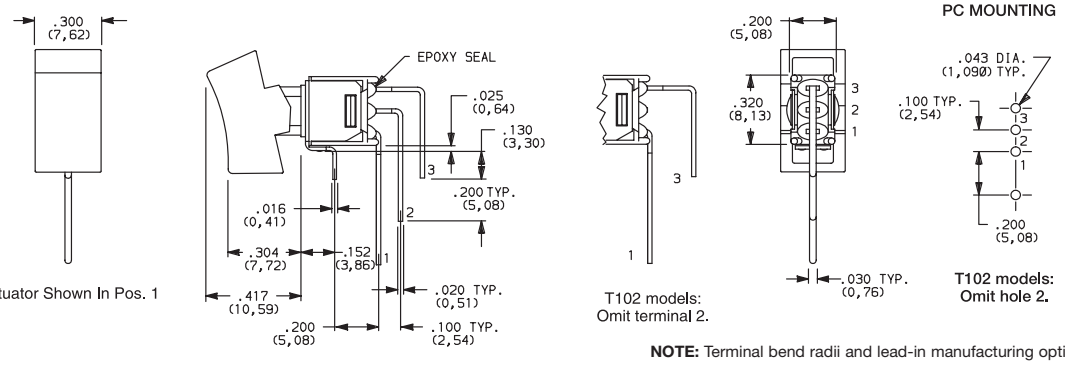

Actuator Shown In Pos. 1

T102 models:
Omit terminal 2.

T102 models:
Omit hole 2.

NOTE: Terminal bend radii and lead-in manufacturing option.

AV VERTICAL RIGHT ANGLE, PC THRU-HOLE

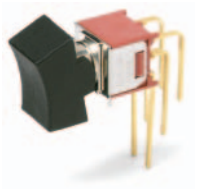

T201J1AVBE2
Vertical Actuation
DPDT

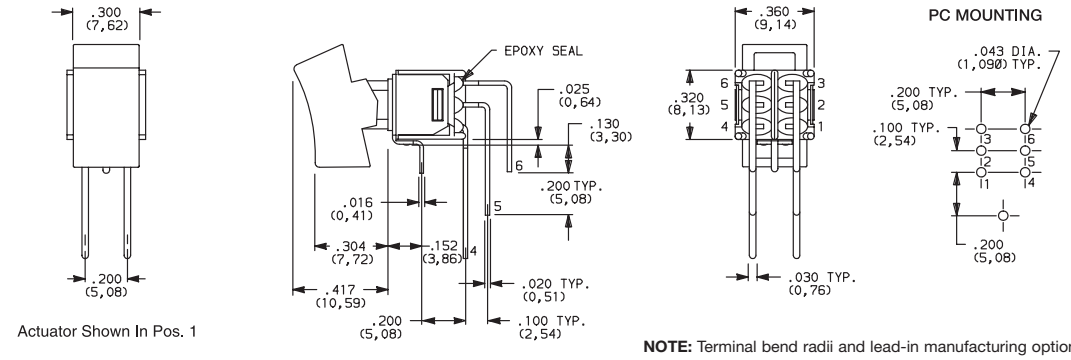

Actuator Shown In Pos. 1

NOTE: Terminal bend radii and lead-in manufacturing option.

V3 VERTICAL MOUNT, V-BRACKET

T101J1V3BE2
SPDT

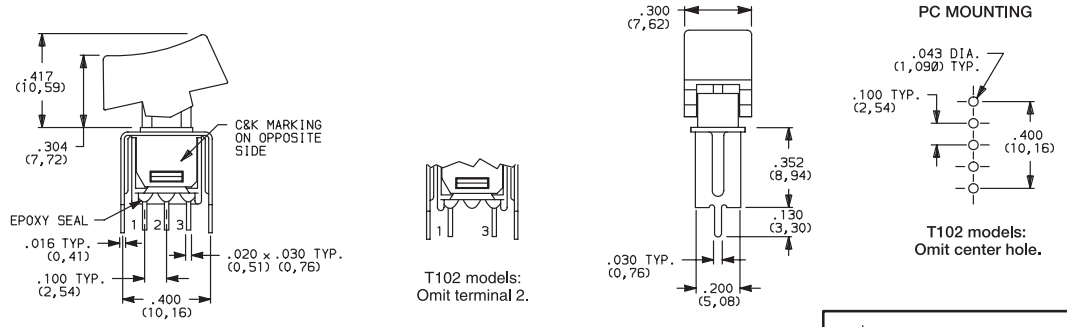

Actuator Shown In Pos. 1

T102 models:
Omit terminal 2.

T102 models:
Omit center hole.

Third Angle Projection

Dimensions are shown: Inches (mm)
Specifications and dimensions subject to change

T Series
Subminiature Rocker Switches

TERMINATIONS

V3 VERTICAL MOUNT, V-BRACKET

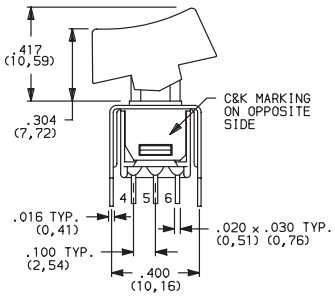

Actuator Shown In Pos. 1

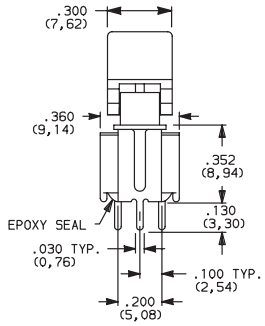

PC MOUNTING

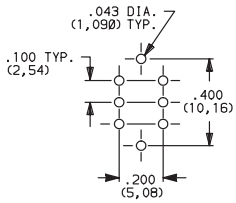

T201J1V3BE2
DPDT

CONTACT MATERIAL

OPTION CODE	CONTACT MATERIAL	TERMINAL PLATING	RATINGS	
B	GOLD [3]	GOLD [1]	LOW LEVEL/ DRY CIRCUIT	0.4 VA MAX. @ 20 V AC OR DC MAX.
P		MATTE-TIN [6]		
Q	SILVER [4,5]	SILVER [5]	POWER	TX01 MODELS: 3 AMPS @ 120 V AC OR 28 V DC. ALL OTHER MODELS: 2 AMPS @ 120 V AC OR 28 V DC.
G	GOLD OVER SILVER [2,3]	GOLD [3]	LOW LEVEL/DRY CIRCUIT OR POWER	TX01 MODELS: 0.4 VA MAX @ 20 V AC OR DC MAX. OR 3 AMPS @ 120 V AC OR 28 V DC. ALL OTHER MODELS: 0.4 VA MAX @ 20 V AC OR DC MAX. OR 2 AMPS @ 120 V AC OR 28 V DC.
R		MATTE-TIN [6]		

* Note: See Technical Data section of this catalog for RoHS compliant and compatible definitions and specifications.

[1] CONTACTS & TERMINALS: Copper alloy, with gold plate over nickel plate.
[2] END CONTACTS: Coin silver, with gold plate over nickel plate.
[3] CENTER CONTACTS & ALL TERMINALS: Copper alloy, with gold plate over nickel plate.
[4] END CONTACTS: Coin silver, silver plated.
[5] CENTER CONTACT & ALL TERMINALS: Copper alloy, silver plated.
[6] TERMINALS: Copper alloy, with matte-tin over nickel plate.

NOTE: Any models supplied with B, G, P, Q & R contact material are RoHS compliant.

All models ® with all options when ordered with G, Q, or R contact material.

B contact material standard with A, AV, V3 terminations.

Q contact material standard with C & Z terminations.

P & R contact materials not available with Z terminations.

SEAL

E EPOXY SEAL

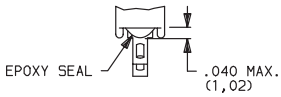

Third Angle Projection

Dimensions are shown: Inches (mm)
Specifications and dimensions subject to change

AVAILABLE HARDWARE

Panel mounting hardware for rocker and lever handle switches is available separately. Mounting hardware consists of two screws, two nuts, two standoffs and two lockwashers per switch, and is available for panel thicknesses of 1/16, 3/32 and 1/8 inch. See part numbers below.

TYPICAL ASSEMBLY

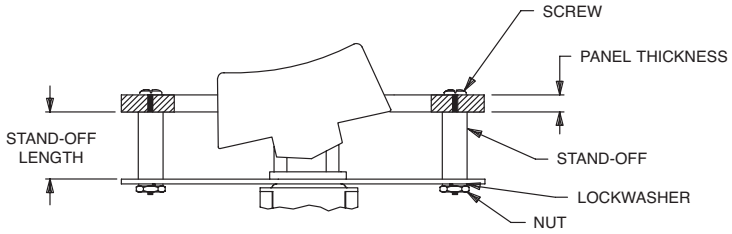

PART NO.	PANEL THK.	STANDOFF LENGTH
761101000	1/16 IN. (1,59)	.295 (7,49)
761102000	3/32 IN. (2,38)	.264 (6,71)
761103000	1/8 IN. (3,18)	.233 (5,92)

NOTE: Additional nuts, screws and lockwashers available separately, see Technical Data section of this catalog.

J1 Actuator

PART NO.
468002263 **BLACK**

Material: Nylon
Finish: Matte

J6 Actuator

PART NO.
468102263 **BLACK**

Material: Nylon
Finish: Matte

NOTE: Other colors, custom actuator markings and legends available, consult Customer Service Center.

Third Angle Projection

Dimensions are shown: Inches (mm)
Specifications and dimensions subject to change

AMEYA360
Components Supply Platform

Authorized Distribution Brand :

Website :

Welcome to visit www.ameya360.com

Contact Us :

Address :

401 Building No.5, JiuGe Business Center, Lane 2301, Yishan Rd
Minhang District, Shanghai , China

Sales :

Direct +86 (21) 6401-6692

Email amall@ameya360.com

QQ 800077892

Skype ameyasales1 ameyasales2

Customer Service :

Email service@ameya360.com

Partnership :

Tel +86 (21) 64016692-8333

Email mkt@ameya360.com