DATE	DESCRIPTION	REV.
3.23.04	CHANGE AS PER ECN 04-018	C
12.6.04	CHANGE AS PER ECN 04-167	D
6.8.05	CHANGE AS PER ECN 05-033	E
12.16.09	CHANGE AS PER ECN 09-189	F

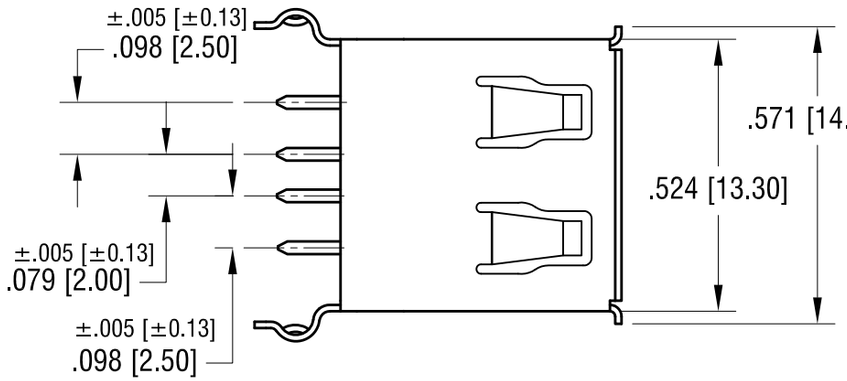

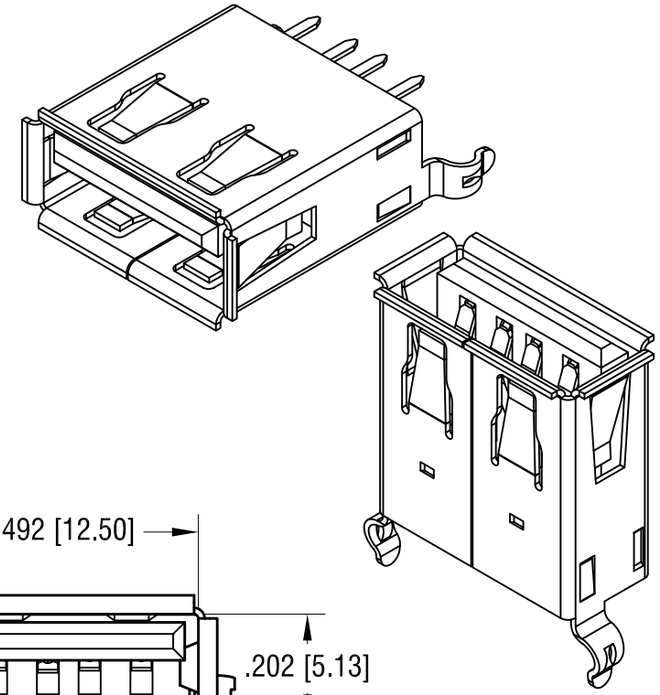

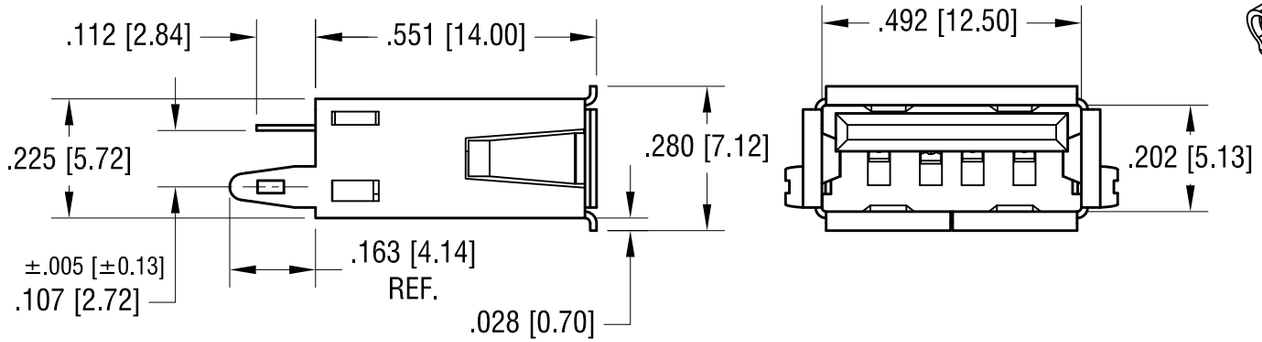

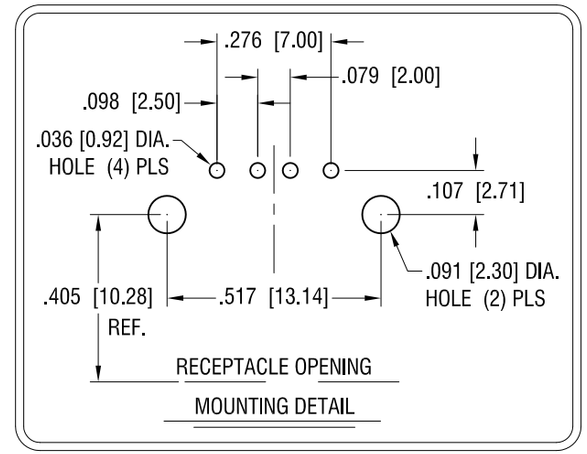

Notes:

Materiall:

Shell: Mat'l- Phosphor Bronze
Finish: Tin plate, over Nickel Plate
Insulator: Glass Filled LCP
Contacts: Phosphor Bronze

Finish:

Contact Area: Gold Plate over Nickel Plate
on Solder Tail: Tin Plate over Nickel Plate

Electrical Specifications

Rated Voltage: 30V AC (rms)
Contact Current Rating: 1 A Max.
Contact Resistance: 30 milliohms Max.
Dielectric Withstanding: 750V AC
Operating Temperature: -55°C to 85°C

THIS DOCUMENT IS THE PROPERTY OF KEYSTONE ELECTRONICS CORP. AND SHALL NOT BE REPRODUCED, DISTRIBUTED OR USED AS A BASIS FOR MANUFACTURE WITHOUT PRIOR WRITTEN PERMISSION FROM KEYSTONE ELECTRONICS CORP.

KEYSTONE ELECTRONICS CORP.
www.keyelco.com • ASTORIA, N.Y. 11105-2017 • Tel (718) 956-8900

PART NAME: USB A-TYPE VERTICAL SOCKET

MATERIAL: AS NOTED

FINISH: AS NOTED

DRN BY: BOONE | DATE: 6.18.98

APP'D: LN | SCALE: 3X

TOLERANCES: INCH [MM]
DECIMAL ± .010 [± 0.25]
ANGULAR ± 1°
UNLESS OTHERWISE SPECIFIED

CODE: C/M

DWG NO. 923

AMEYA360
Components Supply Platform

Authorized Distribution Brand :

Website :

Welcome to visit www.ameya360.com

Contact Us :

- ## Address :

401 Building No.5, JiuGe Business Center, Lane 2301, Yishan Rd
Minhang District, Shanghai , China

- ## Sales :

Direct +86 (21) 6401-6692

Email amall@ameya360.com

QQ 800077892

Skype ameyasales1 ameyasales2

- ## Customer Service :

Email service@ameya360.com

- ## Partnership :

Tel +86 (21) 64016692-8333

Email mkt@ameya360.com