COOPER Bussmann

5 x 20mm Medium Time-Delay Glass Tube Fuses

GMC Series

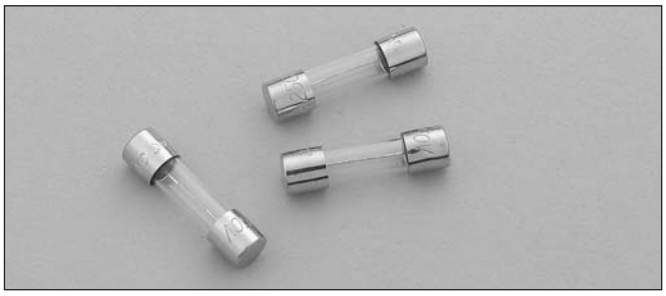

Electrical Characteristics		
Rated Current	% of Amp Rating	Opening Time
63mA - 10A	100%	None
	135%	60 minutes maximum
	200%	2 minutes maximum

Description

- Medium time-delay, low breaking capacity
- Available with optional axial leads
- 5 x 20mm physical size
- Glass tube, nickel-plated brass endcap construction
- Designed to UL/CSA 248-14

Agency Information

- UL Listed, Guide JDYX, File E19180, 63mA-6.3A
- UL Recognized Card: (7A-10A) Guide JDYX2, File E19180
- CSA Certified, Class 1422-01, File E65063, 63mA-6.3A
- MITI Approval, 1A-10A
- KC-Mark: Certificate SU05011-4001 (63mA~250mA); SU05011-4002 (300mA~800mA); SU05011-4003 (1A~3.15A); SU05011-4004 (3.5A~6.3A)

Ordering

- Specify packaging code prefix, product number and option code suffix
- For RoHS compliant version (suffix "-R"), drop mA or A from product code (e.g., GMC-2-R)

Specifications						
Product Number	Voltage Rating Vac	Interrupting Rating (Amps)*		Typical DC Cold Resistance (Ω)**	Typical Pre-Arc I^2t AC†	Maximum Voltage Drop (mV)‡
		250Vac	125Vac			
GMC-63mA	250	35	10,000	10.350	0.0027	1400
GMC-80mA	250	35	10,000	-	0.0050	1400
GMC-100mA	250	35	10,000	4.775	0.0094	1200
GMC-125mA	250	35	10,000	3.400	0.014	1000
GMC-150mA	250	35	10,000	2.555	0.022	800
GMC-160mA	250	35	10,000	2.295	0.022	730
GMC-200mA	250	35	10,000	1.395	0.032	650
GMC-250mA	250	35	10,000	0.965	0.046	490
GMC-300mA	250	35	10,000	0.838	0.081	580
GMC-315mA	250	35	10,000	0.685	0.081	480
GMC-400mA	250	35	10,000	0.615	0.18	510
GMC-500mA	250	35	10,000	0.335	0.41	370
GMC-600mA	250	35	10,000	0.282	0.60	360
GMC-630mA	250	35	10,000	0.246	0.66	360
GMC-700mA	250	35	10,000	0.213	0.85	340
GMC-750mA	250	35	10,000	0.213	0.85	320
GMC-800mA	250	35	10,000	0.180	0.85	290
GMC-1A	250	35	10,000	0.156	1.8	250
GMC-1.25A	250	100	10,000	0.098	3.4	200
GMC-1.5A	250	100	10,000	0.076	5.4	190
GMC-1.6A	250	100	10,000	0.067	5.8	160
GMC-2A	250	100	10,000	0.043	8.9	130
GMC-2.5A	250	100	10,000	0.035	13	130
GMC-3A	250	100	10,000	0.026	19	130
GMC-3.15A	250	100	10,000	0.025	23	130
GMC-3.5A	125	-	10,000	0.022	25	130
GMC-4A	125	-	10,000	0.019	36	120
GMC-5A	125	-	10,000	0.014	58	120
GMC-6A	125	-	10,000	0.013	88	120
GMC-6.3A	125	-	10,000	0.012	110	120
GMC-7A	125	-	200	0.012	150	120
GMC-8A	125	-	200	0.009	200	110
GMC-10A	125	-	200	0.007	300	110

* Interrupting ratings: Interrupting ratings for 63mA - 6.3A were measured at 70% - 80% power factor on AC. The interrupting ratings for 7A - 10A were measured at 100% power factor on AC.
** DC Cold Resistance (Measured at <10% of rated current)
† Typical Pre-Arching I^2t (I^2t was measured at listed interrupting rating and rated voltage)
‡ Maximum Voltage drop (Voltage drop was measured at 20°C ambient temperature at rated current)

Dimensions - mm

Drawing Not to Scale

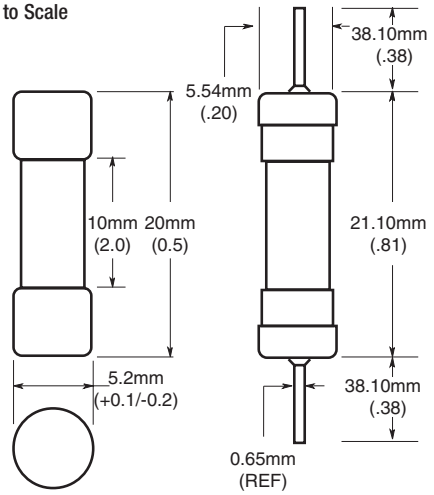

- Ratings above 6.3A have a 0.8mm diameter lead
- With TR2 packaging code, lead wire length is 19.05mm

Time-Current Curves

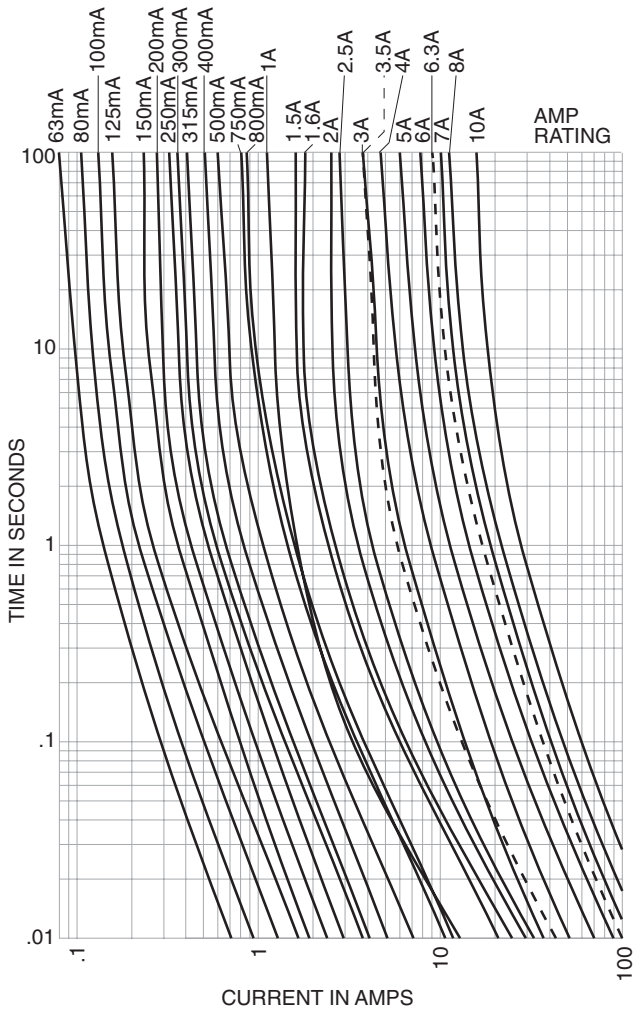

Packaging Code	
Product Number Prefix	**Description**
BK-	100 fuses packed into a cardboard carton
BK1-	1000 fuses packed into a poly bag
TR2-	1500 Axial lead fuses packed into tape on a reel (19.05mm lead wire length)

Option Code	
Product Number Suffix	**Description**
-V	Axial leads - copper tinned wire with nickel plated brass overcaps (place before amp rating; e.g., GMC-V-2)
-R	RoHS compliant version (drop “mA” or “A” from product number when ordering)

The only controlled copy of this Data Sheet is the electronic read-only version located on the Cooper Bussmann Network Drive. All other copies of this document are by definition uncontrolled. This bulletin is intended to clearly present comprehensive product data and provide technical information that will help the end user with design applications. Cooper Bussmann reserves the right, without notice, to change design or construction of any products and to discontinue or limit distribution of any products. Cooper Bussmann also reserves the right to change or update, without notice, any technical information contained in this bulletin. Once a product has been selected, it should be tested by the user in all possible applications.

Life Support Policy: Cooper Bussmann does not authorize the use of any of its products for use in life support devices or systems without the express written approval of an officer of the Company. Life support systems are devices which support or sustain life, and whose failure to perform, when properly used in accordance with instructions for use provided in the labeling, can be reasonably expected to result in significant injury to the user.

© 2011 Cooper Bussmann
www.cooperbussmann.com

AMEYA360
Components Supply Platform

Authorized Distribution Brand :

Website :

Welcome to visit www.ameya360.com

Contact Us :

- ## Address :

401 Building No.5, JiuGe Business Center, Lane 2301, Yishan Rd
Minhang District, Shanghai , China

- ## Sales :

Direct +86 (21) 6401-6692

Email amall@ameya360.com

QQ 800077892

Skype ameyasales1 ameyasales2

- ## Customer Service :

Email service@ameya360.com

- ## Partnership :

Tel +86 (21) 64016692-8333

Email mkt@ameya360.com