19-2107; Rev 3; 10/11

Regulated 3.3V/5.0V Step-Up/Step-Down Charge Pump

General Description

The MAX1595 charge-pump regulator generates either 3.3V or 5V from a 1.8V to 5.5V input. The unique control architecture allows the regulator to step up or step down the input voltage to maintain output regulation. The 1MHz switching frequency, combined with a unique control scheme, allows the use of a ceramic capacitor as small as 1µF for 125mA of output current. The complete regulator requires three external capacitors—no inductor is needed. The MAX1595 is specifically designed to serve as a high-power, high- efficiency auxiliary supply in applications that demand a compact design. The MAX1595 is offered in space-saving 8-pin µMAX® and high-power 12-pin TQFN packages.

Applications

White LED Power

Flash Memory Supplies

Battery-Powered Applications

Miniature Equipment

PCMCIA Cards

3.3V to 5V Local Conversion Applications

Backup-Battery Boost Converters

3V to 5V GSM SIMM Cards

µMAX is a registered trademark of Maxim Integrated Products, Inc.

Typical Operating Circuit

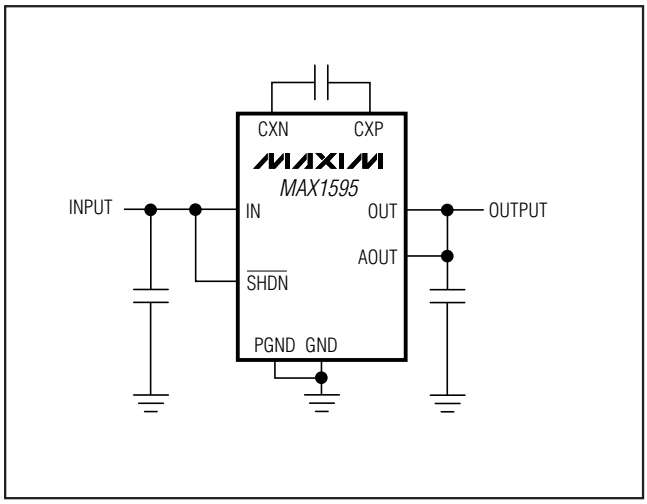

Features

- **Ultra-Small: Requires Only Three Ceramic Capacitors**
- **No Inductors Required**
- **Up to 125mA Output Current**
- **Regulated ±3% Output Voltage**
- **1MHz Switching Frequency**
- **1.8V to 5.5V Input Voltage**
- **220µA Quiescent Current**
- **0.1µA Shutdown Current**
- **Load Disconnect in Shutdown**

Ordering Information

PART	TEMP RANGE	PIN-PACKAGE
MAX1595EUA33+	-40°C to +85°C	8 µMAX
MAX1595ETC33+	-40°C to +85°C	12 TQFN-EP*
MAX1595EUA50+	-40°C to +85°C	8 µMAX
MAX1595ETC50+	-40°C to +85°C	12 TQFN-EP*

+Denotes a lead(Pb)-free/RoHS-compliant package.
**EP = Exposed pad.*

Selector Guide

PART	V_{OUT} (V)**	TOP MARK
MAX1595EUA33+	3.3	—
MAX1595ETC33+	3.3	AAEH
MAX1595EUA50+	5.0	—
MAX1595ETC50+	5.0	AAEI

***Contact factory for other fixed-output voltages from 2.7V to 5.0V.*

Pin Configurations

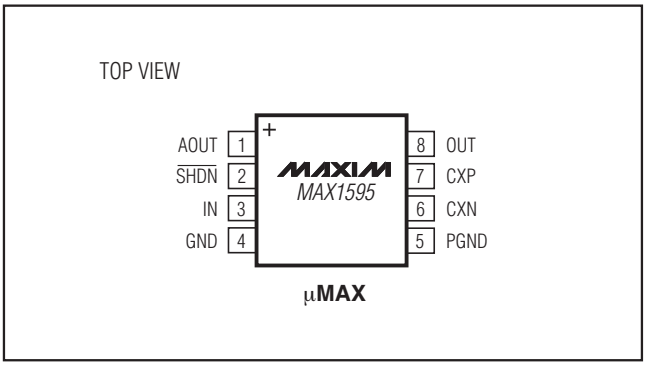

Pin Configurations continued at end of data sheet.

For pricing, delivery, and ordering information, please contact Maxim Direct at 1-888-629-4642, or visit Maxim's website at www.maxim-ic.com.

Regulated 3.3V/5.0V Step-Up/ Step-Down Charge Pump

ABSOLUTE MAXIMUM RATINGS

IN, OUT, AOUT to GND .....-0.3V to +6V
$\overline{SHDN}$ to PGND .....-0.3V to +6V
PGND to GND .....-0.3V to +0.3V
CXN to PGND .....-0.3V to (Lower of IN + 0.8V or 6.3V)
CXP to GND .....-0.8V to (Higher of OUT + 0.8V or IN + 0.8V but not greater than 6V)
Continuous Output Current 150mA

Continuous Power Dissipation (T_A = +70°C)
μMAX (derate 4.8mW/°C above +70°C) 387.8mW
TQFN-EP (derate 24.4mW/°C above +70°C) 1951.2mW
Operating Temperature Range .....-40°C to +85°C
Junction Temperature .....+150°C
Storage Temperature Range .....-65°C to +150°C
Lead Temperature (soldering, 10s) .....+300°C
Soldering Temperature (reflow) .....+260°C

Stresses beyond those listed under "Absolute Maximum Ratings" may cause permanent damage to the device. These are stress ratings only, and functional operation of the device at these or any other conditions beyond those indicated in the operational sections of the specifications is not implied. Exposure to absolute maximum rating conditions for extended periods may affect device reliability.

PACKAGE THERMAL CHARACTERISTICS (Note 1)

TQFN
Junction-to-Ambient Thermal Resistance (θ_{JA}).....41°C/W
Junction-to-Case Thermal Resistance (θ_{JC}).....6°C/W

μMAX
Junction-to-Ambient Thermal Resistance (θ_{JA}).....206.3°C/W
Junction-to-Case Thermal Resistance (θ_{JC}).....42°C/W

Note 1: Package thermal resistances were obtained using the method described in JEDEC specification JESD51-7, using a four-layer board. For detailed information on package thermal considerations, refer to **www.maxim-ic.com/thermal-tutorial**.

ELECTRICAL CHARACTERISTICS

(V_{IN} = 2V for MAX1595_ _ _33, V_{IN} = 3V for MAX1595_ _ _50, C_{IN} = 1μF, C_X = 0.22μF, C_{OUT} = 1μF, T_A = -40° to +85°C, unless otherwise noted. Typical values are at T_A = +25°C.) (Note 2)

PARAMETER	SYMBOL	CONDITIONS		MIN	TYP	MAX	UNITS
Input Voltage Range	V_{IN}			1.8		5.5	V
Input Undervoltage Lockout Threshold				1.40	1.60	1.72	V
Input Undervoltage Lockout Hysteresis					40		mV
Output Voltage	V_{OUT}	0 < I_{LOAD} < 125mA, V_{IN} = +3.0V	T_A = 0°C to +85°C	4.85	5.05	5.15	V
			T_A = -40°C to +85°C	4.80		5.20	
		0 < I_{LOAD} < 75mA, V_{IN} = +2.0V	T_A = 0°C to +85°C	3.20	3.33	3.40	
			T_A = -40°C to +85°C	3.16		3.44	
		0 < I_{LOAD} < 30mA, V_{IN} = +1.8V	T_A = 0°C to +85°C	3.20	3.33	3.40	
			T_A = -40°C to +85°C	3.16		3.44	
No-Load Input Current	I_Q	V_{IN} = +2.0V, MAX1595_ _ _33			220	320	μA
		V_{IN} = +3.0V, MAX1595_ _ _50			240	350	
Switching Frequency	f_{OSC}	I_{LOAD} > 20mA, V_{OUT} > V_{IN}		0.85	1.0	1.15	MHz
Shutdown Supply Current	$I_{\overline{SHDN}}$	$V_{\overline{SHDN}}$ = 0V, V_{IN} = +5.5V, V_{OUT} = 0V				5	μA
$\overline{SHDN}$ Input Voltage Low	V_{INL}	V_{IN} = 2.0V to 5.5V				0.6	V
$\overline{SHDN}$ Input Voltage High	V_{INH}	V_{IN} = 2.0V to 5.5V		1.6			V
$\overline{SHDN}$ Input Leakage Current						0.1	μA

Note 2: Specifications to -40°C are guaranteed by design, not production tested.

Typical Operating Characteristics

(Circuit of Figure 4, V_{IN} = 2V for MAX1595_ _ _33, V_{IN} = 3V for MAX1595_ _ _50, T_A = +25°C, unless otherwise noted.)

NO LOAD SUPPLY CURRENT vs. SUPPLY VOLTAGE

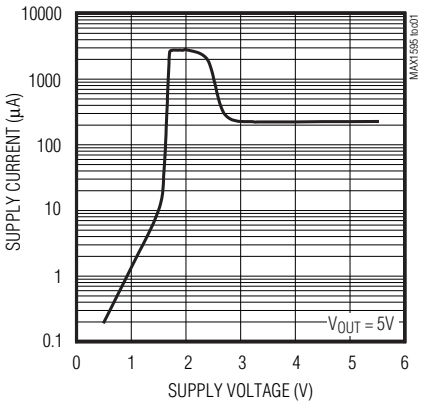

OUTPUT WAVEFORM

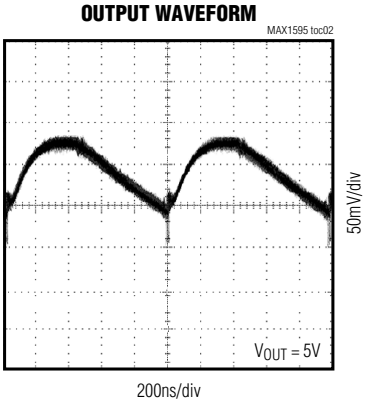

OUTPUT WAVEFORM. AC-COUPLED.
V_{IN} = 3.6V, I_{LOAD} = 100mA, C_{OUT} = 1µF

OUTPUT VOLTAGE vs. LOAD CURRENT

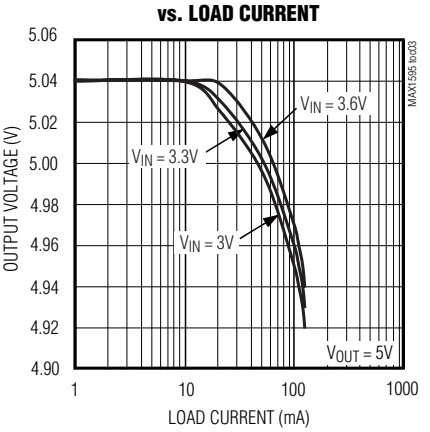

3V EFFICIENCY vs. LOAD CURRENT

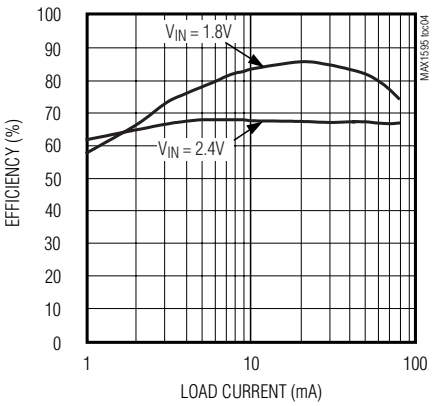

5V EFFICIENCY vs. LOAD CURRENT

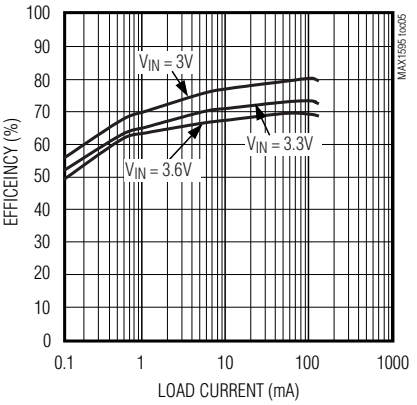

SHUTDOWN TIMING

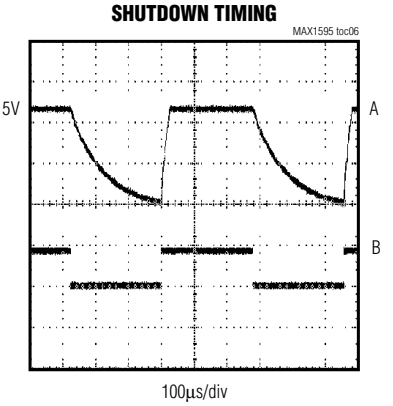

A: OUTPUT VOLTAGE: R_L = 100Ω, 2V/div
B: SHDN VOLTAGE: 2V/div

LINE-TRANSIENT RESPONSE

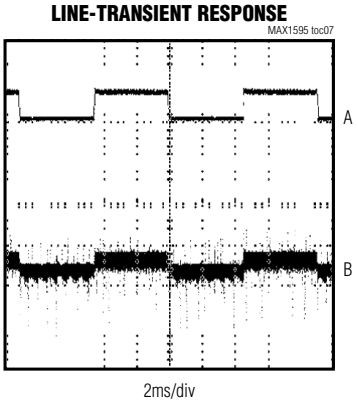

A: INPUT VOLTAGE: V_{IN} = 3.1V TO 3.6V, 500mV/div
B: OUTPUT VOLTAGE: I_{LOAD} = 50mA, 100mV/div

LOAD-TRANSIENT RESPONSE

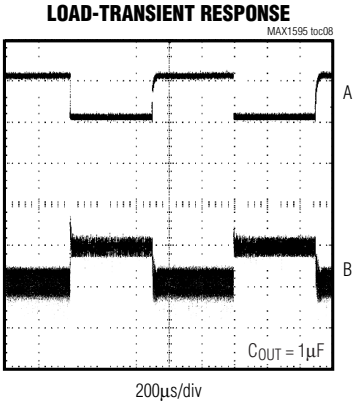

A: LOAD CURRENT: I_{LOAD} = 5mA to 95mA, 100mA/div
B: OUTPUT VOLTAGE: AC-COUPLED 100mV/div

OUTPUT VOLTAGE vs. SUPPLY VOLTAGE

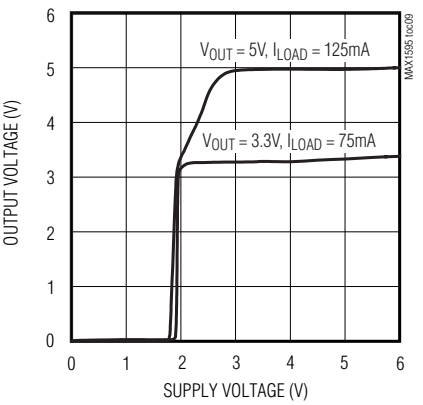

Regulated 3.3V/5.0V Step-Up/ Step-Down Charge Pump

Pin Description

PIN		NAME	FUNCTION
µMAX	TQFN-EP		
1	12	AOUT	Analog Power and Sense Input for Error Amplifier/Comparator. Connect to OUT at output filter capacitor.
2	1	$\overline{SHDN}$	Shutdown Input. When $\overline{SHDN}$ = low, the device turns off; when $\overline{SHDN}$ = high, the device activates. In shutdown, OUT is disconnected from IN.
3	2, 3	IN	Input Supply. Can range from 1.8V to 5.5V. Bypass to GND with a 1µF capacitor.
4	4	GND	Ground
5	5, 6	PGND	Power Ground
6	7, 8	CXN	Negative Terminal of the Charge-Pump Transfer Capacitor
7	9	CXP	Positive Terminal of the Charge-Pump Transfer Capacitor
8	10, 11	OUT	Output. Bypass to GND with output capacitor filter.
—	—	EP	Exposed Pad. Internally connected to GND. Connect to a large ground plane to maximize thermal performance. Not intended as an electrical connection point (TQFN package only).

Detailed Description

The MAX1595 charge pump provides either a 3.3V or 5V regulated output. It delivers a maximum 125mA load current. In addition to boost regulating from a lower supply, it is also capable of buck regulating from supplies that exceed the regulated output by a diode drop or more. Designed specifically for compact applications, a complete regulator circuit requires only three small external capacitors. An innovative control scheme provides constant frequency operation from medium to heavy loads, while smoothly transitioning to low-power mode at light loads to maintain optimum efficiency. In buck mode, switch S1 (Figure 1) is switched continuously to IN, while switch S2 alternates between IN and OUT. An amount of charge proportional to the difference between the output voltage and the supply voltage is stored on C_X, which gets transferred to the output when the regulation point is reached. Maximum output ripple is proportional to the difference between the supply voltage and the output voltage, as well as to the ratio of the transfer capacitor (C_X) to the output capacitor (C_{OUT}).

The MAX1595 consists of an error amplifier, a 1.23V bandgap reference, internal resistive feedback network, oscillator, high-current MOSFET switches, and shutdown and control logic. Figure 1 shows an idealized unregulated charge-pump voltage doubler. The oscillator runs at a 50% duty cycle. During one half of the period, the transfer capacitor (C_X) charges to the input voltage. During the other half, the doubler transfers the sum of C_X and input voltage to the output filter capacitor (C_{OUT}). Rather than doubling the input voltage, the MAX1595 provides a regulated output voltage of either 3.3V or 5.0V.

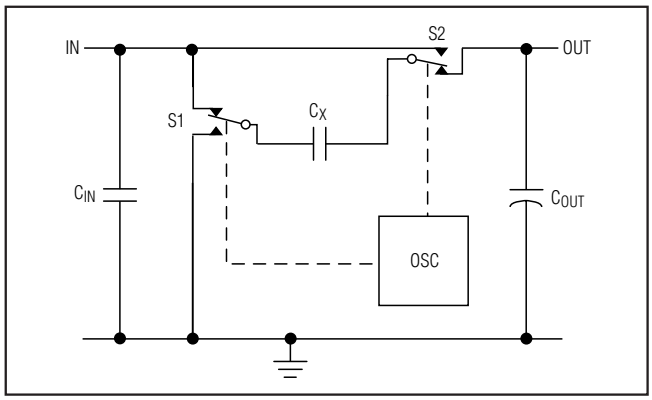

Figure 1. Unregulated Voltage Doubler

Shutdown

Driving $\overline{SHDN}$ low places the device in shutdown mode. The device draws 0.1µA of supply current in this mode. When driven high, the MAX1595 enters a soft-start mode. Soft-start mode terminates when the output voltage regulates, or after 2ms, whichever comes first. In shutdown, the output disconnects from the input.

Undervoltage Lockout

The MAX1595 has an undervoltage-lockout that deactivates the devices when the input voltage falls below 1.6V. Below UVLO, hysteresis holds the device in shutdown until the input voltage rises 40mV above the lockout threshold.

Applications Information

Using white LEDs to backlight LCDs is an increasingly popular approach for portable information devices (Figure 2). Because the forward voltage of white LEDs exceeds the available battery voltage, the use of a charge pump such as the MAX1595 provides high efficiency, small size, and constant light output with changing battery voltages. If the output is used only to light LEDs, the output capacitor can be greatly reduced. The frequency modulation of the LED intensity is not discernible to the human eye, and the smaller capacitor saves both size and cost.

Adding two Schottky diodes and two capacitors implements a tripler and allows the MAX1595_ _ _50 to regulate a current of 75mA with a supply voltage as low as 2.3V (Figure 3).

Capacitor Selection

The MAX1595 requires only three external capacitors (Figure 4). Their values are closely linked to the output current capacity, oscillator frequency, output noise content, and mode of operation.

Generally, the transfer capacitor (C_X) will be the smallest, and the input capacitor (C_{IN}) is twice as large as C_X. Higher switching frequencies allow the use of the smaller C_X and C_{IN}. The output capacitor (C_{OUT}) can be anywhere from 5-times to 50-times larger than C_X. Table 1 shows recommended capacitor values.

In addition, the following equation approximates output ripple:

$$V_{RIPPLE} \cong I_{OUT} / (2 \times f_{OSC} \times C_{OUT})$$

Table 2 lists the manufacturers of recommended capacitors. Ceramic capacitors will provide the lowest ripple due to their typically lower ESR.

Power Dissipation

The power dissipated in the MAX1595 depends on output current and is accurately described by:

$$P_{DISS} = I_{OUT} (2V_{IN} - V_{OUT})$$

P_{DISS} must be less than that allowed by the package rating.

Layout Considerations

All capacitors should be soldered in close proximity to the IC. Connect ground and power ground through a short, low-impedance trace. The input supply trace should be as short as possible. Otherwise, an additional input supply filter capacitor (tantalum or electrolytic) may be required.

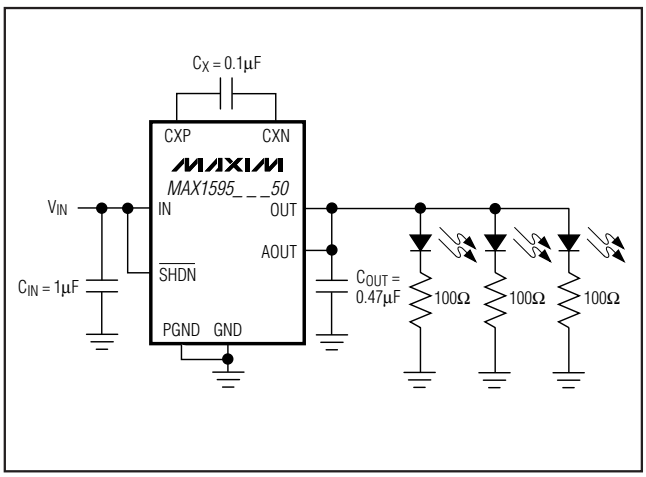

Figure 2. White LED Bias Supply

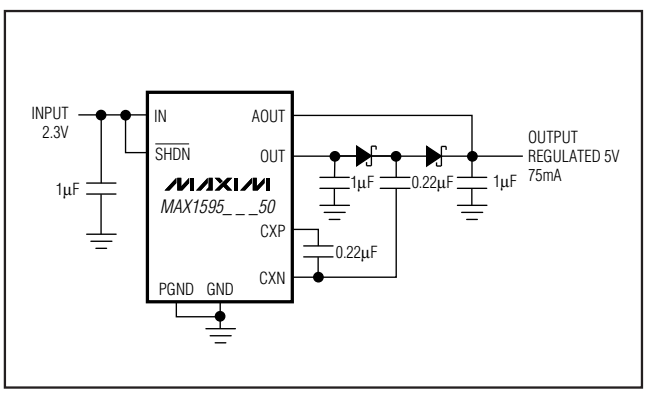

Figure 3. Regulated Voltage Tripler

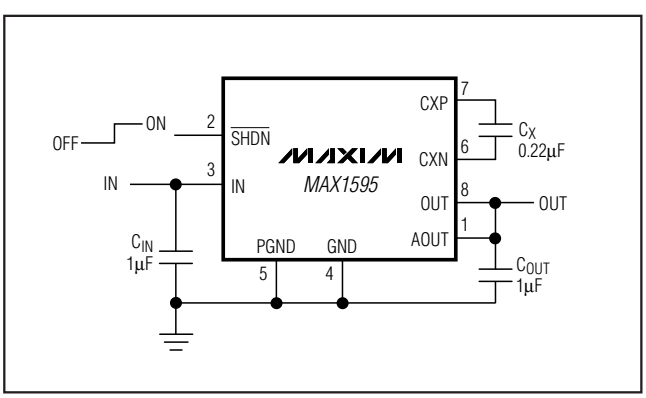

Figure 4. Standard Operating Circuit

Regulated 3.3V/5.0V Step-Up/ Step-Down Charge Pump

Table 1. Recommended Capacitor Values

OUTPUT RIPPLE (mV)	C_{IN} (µF)	C_X (µF)	C_{OUT} (µF)
70	1	0.22	1
35	2.2	0.47	2.2

Table 2. Recommended Capacitor Manufacturers

VALUE (µF)	VOLTAGE (V)	TYPE	SIZE	MANUFACTURER	PART
1	10	X7R	0805	Taiyo Yuden	LMK212BJ105MG
0.22	10	X7R	0603	Taiyo Yuden	LMK107BJ224MA
0.47	10	X7R	0603	Taiyo Yuden	LMK107BJ474MA
0.1	10	X7R	0603	Taiyo Yuden	LMK107BJ104MA

Pin Configurations (continued)

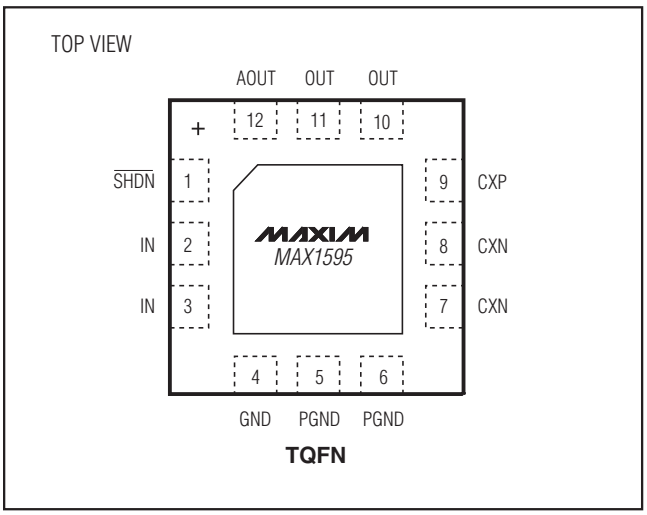

Chip Information

PROCESS: CMOS

Package Information

For the latest package outline information and land patterns (footprints), go to **www.maxim-ic.com/packages**. Note that a "+", "#", or "-" in the package code indicates RoHS status only. Package drawings may show a different suffix character, but the drawing pertains to the package regardless of RoHS status.

PACKAGE TYPE	PACKAGE CODE	OUTLINE NO.	LAND PATTERN NO.
8 µMAX	U8+1	21-0036	90-0092
12 TQFN	1244+4	21-0139	90-0068

Revision History

REVISION NUMBER	REVISION DATE	DESCRIPTION	PAGES CHANGED
2	6/09	Added EP (exposed pad) and top mark information	1, 2, 4, 6
3	10/11	Updated *Absolute Maximum Ratings* section and added *Package Thermal Characteristics* section	2

Maxim cannot assume responsibility for use of any circuitry other than circuitry entirely embodied in a Maxim product. No circuit patent licenses are implied. Maxim reserves the right to change the circuitry and specifications without notice at any time. The parametric values (min and max limits) shown in the Electrical Characteristics table are guaranteed. Other parametric values quoted in this data sheet are provided for guidance.

© 2011 Maxim Integrated Products Maxim is a registered trademark of Maxim Integrated Products, Inc.

AMEYA360
Components Supply Platform

Authorized Distribution Brand :

Website :

Welcome to visit www.ameya360.com

Contact Us :

- ## Address :

401 Building No.5, JiuGe Business Center, Lane 2301, Yishan Rd
Minhang District, Shanghai , China

- ## Sales :

Direct +86 (21) 6401-6692

Email amall@ameya360.com

QQ 800077892

Skype ameyasales1 ameyasales2

- ## Customer Service :

Email service@ameya360.com

- ## Partnership :

Tel +86 (21) 64016692-8333

Email mkt@ameya360.com