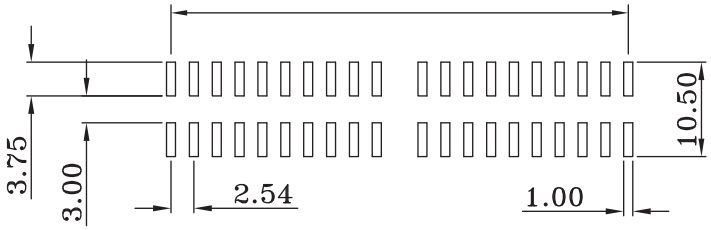

PCB LAYOUT - COMPONENT VIEW
TOLERANCE ±0.05MM

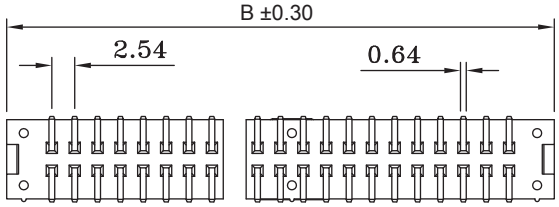

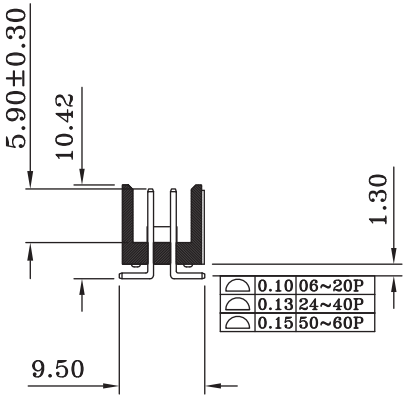

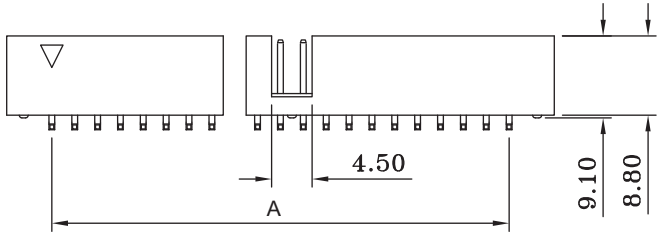

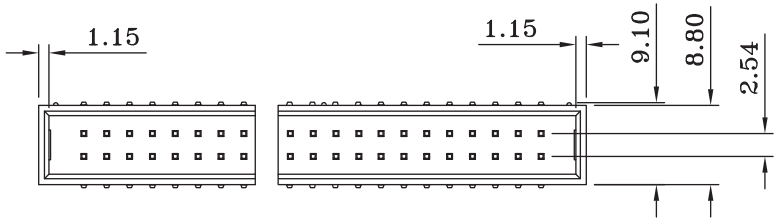

TECHNICAL CHARACTERISTICS

MATERIAL
INSULATOR: PA 9T
COLOR: BLACK
CONTACT MATERIAL: COPPER ALLOYS
CONTACT TYPE: STAMPED
CONTACT PLATING: GOLD
QUALITY CLASS: 3 AS PER CECC 75 301-802
PITCH: 2.54MM

ENVIRONMENTAL
OPERATING TEMPERATURE: -40 UP TO 105°C
FLAMABILITY RATING: UL94-V0
COMPLIANCE: LEAD FREE AND ROHS

ELECTRICAL
CURRENT RATING: 3 A MAX
WORKING VOLTAGE: 250 VAC
INSULATOR RESISTANCE: >5000 MΩ
DIELECTRIC WITHSTANDING VOLTAGE: 1000 VAC/MIN
CONTACT RESISTANCE: 20 mOHM MAX

STANDARD
CERTIFIED: E323964

SOLDERING
JEDEC LEAD FREE REFLOW SOLDERING PROCESS

PACKAGING
TUBE

DIMENSION

A = 2.54 x (NB PINS/2 - 1)
B = (2.54 x NB PINS/2) + 7.5

RoHS Compliant

REV	DATE	FILE	BY
J			
I	08-FEB-16	UPDATE	AK
H	05-OCT-15	COPLANARITY	AK

PROJECTION:

GENERAL TOLERANCE
.X = +/_ 0.2
.XX = +/_ 0.15

APPROVAL: GMo

UNIT: MM
SCALE:
SHEET: 1/3
DRAW: AK

WÜRTH ELEKTRONIK

DESCRIPTION: WR-BHD 2.54 MM MALE SMT BOX HEADER

WERI PART NO: 612 0xx 206 21

SIZE
A4

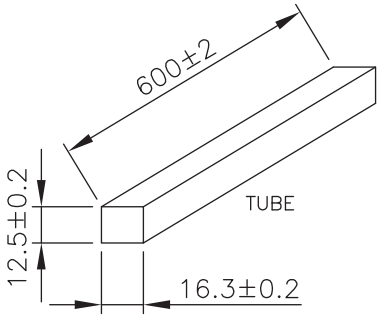

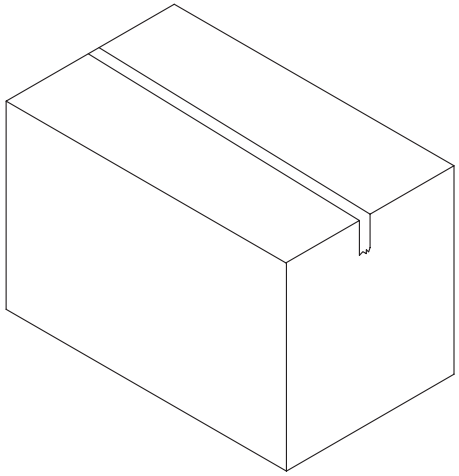

POSITION	PACK TUBE Q,TY
06P	37 Pcs
08P	32 Pcs
10P	28 Pcs
14P	22 Pcs
16P	21 Pcs
20P	17 Pcs
24P	15 Pcs
26P	14 Pcs
34P	11 Pcs
40P	10 Pcs
50P	7 Pcs
60P	5 Pcs

RoHS Compliant

REV	DATE	FILE	BY
G			
F			
E			
D			
C			
B			
A			

PROJECTION:

GENERAL TOLERANCE
.X = +/- 0.2
.XX = +/- 0.15

WÜRTH ELEKTRONIK

APPROVAL: GMo

UNIT: MM
SCALE:
SHEET: 2/3
DRAW: AK

DESCRIPTION: WR-BHD 2.54 MM MALE SMT BOX HEADER

WERI PART NO: 612 0xx 206 21

SIZE
A4

Cautions and Warnings:

This electronic component is designed and developed with the intention for use in general electronics equipments.
Before incorporating the components into any equipments in the field such as aerospace, aviation, nuclear control, submarine, transportation, (automotive control, train control, ship control), transportation signal, disaster prevention, medical, public information network etc. where higher safety and reliability are especially required or if there is possibility of direct damage or injury to human body, Wurth Elektronik must be asked for a written approval.
In addition, even electronic component in general electronic equipments, when used in electrical circuits that require high safety, reliability functions or performance, the sufficient reliability evaluation-check for the safety must be performed before by the user before usage.

RoHS Compliant

REV	DATE	FILE	BY
G			
F			
E			
D			
C			
B			
A	10-SEP-14	PDF	QL

PROJECTION:

APPROVAL: JC

GENERAL TOLERANCE
.X = +/_ 0.2
.XX = +/_ 0.15

UNIT: MM
SCALE:
SHEET: 3/3
DRAW: QL

WÜRTH ELEKTRONIK

DESCRIPTION: DISCLAIMER

WERI PART NO: DISCLAIMER

SIZE
A4

AMEYA360
Components Supply Platform

Authorized Distribution Brand :

Website :

Welcome to visit www.ameya360.com

Contact Us :

- Address :

401 Building No.5, JiuGe Business Center, Lane 2301, Yishan Rd
Minhang District, Shanghai , China

- Sales :

Direct +86 (21) 6401-6692

Email amall@ameya360.com

QQ 800077892

Skype ameyasales1 ameyasales2

- Customer Service :

Email service@ameya360.com

- Partnership :

Tel +86 (21) 64016692-8333

Email mkt@ameya360.com