bq24196 I²C Controlled 2.5-A Single Cell USB/Adapter Charger with Narrow VDC Power Path Management and USB OTG

1 Features

- High Efficiency 2.5-A Switch Mode Charger
  - 92% Charge Efficiency at 2 A
- Highest Battery Discharge Efficiency with 12-mΩ Battery Discharge MOSFET up to 9-A Discharge Current
- Single Input USB-compliant/Adapter Charger
  - Input Voltage and Current Limit Supports USB2.0 and USB3.0
  - Input Current Limit: 100 mA, 150 mA, 500 mA, 900 mA, 1.2 A, 1.5 A, 2 A and 3 A
- 3.9-V to 17-V Input Operating Voltage Range
  - Support All Kinds of Adapter with Input Voltage DPM Regulation
- USB OTG 5 V at 1.3-A Synchronous Boost Converter Operation
  - 93% 5-V Boost Efficiency at 1 A
- Narrow VDC (NVDC) Power Path Management
  - Instant-on Works with No Battery or Deeply Discharged Battery
  - Ideal Diode Operation in Battery Supplement Mode
- 1.5-MHz Switching Frequency for Low Profile Inductor
- Autonomous Battery Charging with or without Host Management
  - Battery Charge Enable
  - Battery Charge Preconditioning
  - Charge Termination and Recharge
- High Accuracy (0°C to 125°C)
  - ±0.5% Charge Voltage Regulation
  - ±7% Charge Current Regulation
  - ±7.5% Input Current Regulation
  - ±2% Output Regulation in Boost Mode
- High Integration
  - Power Path Management
  - Synchronous Switching MOSFETs
  - Integrated Current Sensing
  - Bootstrap Diode
  - Internal Loop Compensation
- Safety
  - Battery Temperature Sensing and Charging Safety Timer
  - Thermal Regulation and Thermal Shutdown
  - Input System Over-Voltage Protection
  - MOSFET Over-Current Protection
- Charge Status Outputs for LED or Host Processor
- Low Battery Leakage Current and Support Shipping Mode
- 4.00 mm x 4.00 mm VQFN-24 Package

2 Applications

- Tablet PC and Smart Phone
- Portable Audio Speaker
- Portable Media Players
- Internet Devices

3 Description

The bq24196 is highly-integrated switch-mode battery charge management and system power path management devices for single cell Li-Ion and Li-polymer battery in a wide range of tablet and other portable devices.

Device Information(1)

PART NUMBER	PACKAGE	BODY SIZE (NOM)
bq24196	VQFN (24)	4.00 mm x 4.00 mm

(1) For all available packages, see the orderable addendum at the end of the datasheet.

bq24196 with PSEL from PHY, charging from SDP/DCP, and Two Thermistor Connections

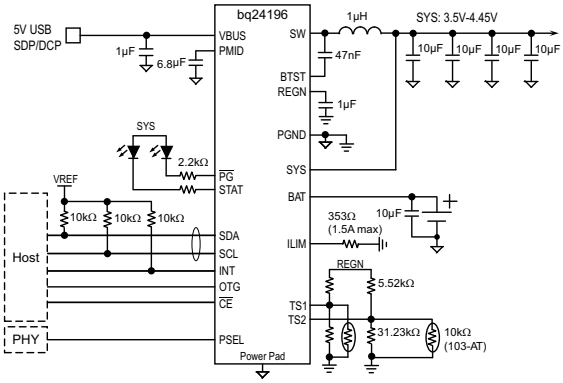

An IMPORTANT NOTICE at the end of this data sheet addresses availability, warranty, changes, use in safety-critical applications, intellectual property matters and other important disclaimers. PRODUCTION DATA.

Table of Contents

1 **Features** ... 1
2 **Applications** ... 1
3 **Description** ... 1
4 **Revision History** ... 2
5 **Description (Continued)** ... 3
6 **Pin Configuration and Functions** ... 4
7 **Specifications** ... 5
7.1 Absolute Maximum Ratings ... 5
7.2 ESD Ratings ... 5
7.3 Recommended Operating Conditions ... 6
7.4 Thermal Information ... 6
7.5 Electrical Characteristics ... 6
7.6 Typical Characteristics ... 9
8 **Detailed Description** ... 12
8.1 Overview ... 12
8.2 Functional Block Diagram ... 12
8.3 Feature Description ... 13
8.4 Device Functional Modes ... 25
8.5 Register Map ... 26
9 **Application and Implementation** ... 34
9.1 Application Information ... 34
9.2 Typical Application ... 34
10 **Power Supply Recommendations** ... 39
11 **Layout** ... 39
11.1 Layout Guidelines ... 39
11.2 Layout Example ... 40
12 **Device and Documentation Support** ... 41
12.1 Documentation Support ... 41
12.2 Trademarks ... 41
12.3 Electrostatic Discharge Caution ... 41
12.4 Glossary ... 41
13 **Mechanical, Packaging, and Orderable Information** ... 42

4 Revision History

Changes from Original (October 2012) to Revision A — **Page**

- Added Handling Rating table, Feature Description section, Device Functional Modes, Application and Implementation section, Power Supply Recommendations section, Layout section, Device and Documentation Support section, and Mechanical, Packaging, and Orderable Information section. ... 1
- Changed BOOT to BTST in Figure 36 ... 1
- Changed V_{SLEEPZ}, $V_{BAT_DPL_HY}$, V_{BATGD} , I_{CHG_20pct}, V_{SHORT}, I_{ADPT_DPM}, K_{ILIM}, $V_{BTST_REFRESH}$ in Electrical Characteristics ... 6
- Added –40°C to 85° to I_{BAT} Test Condition ... 6
- Added REG00[6:3] = 0110 (4.36 V) or 1011 (4.76 V) to $V_{INDPM_REG_ACC}$ Test Conditions ... 8
- Added a MIN value of 435 to K_{ILIM} ... 8
- Deleted $T_{Junction_REG}$ MIN and MAX ... 8
- Changed V_{OTG_ILIM} to I_{OTG_ILIM} and V_{OTG_HSZCP} to I_{OTG_HSZCP} ... 8
- Deleted V_{REGN}, V_{VBUS} = 5 V, I_{REGN} = 20 mA MAX value ... 9
- Changed Functional Block Diagram ... 12
- Changed REG09[5:4] to REG08[5:4] in Charging Termination section ... 20
- Changed Charging Safety Timer description ... 20
- Changed Host Mode and Default Mode description ... 25
- Changed Charge Current Control Register REG02 Bit 0 description and note ... 29
- Changed Charge Voltage Limit from Default: 4.304 V (110010) to Default: 4.208 V (101100) ... 30
- Changed BOOT to BTST in Figure 36 ... 34
- Changed BOOT to BTST in Figure 37 ... 35

Copyright © 2012–2014, Texas Instruments Incorporated

5 Description (Continued)

Its low impedance power path optimizes switch-mode operation efficiency, reduces battery charging time and extends battery life during discharging phase. The I^2C serial interface with charging and system settings makes the device a truly flexible solution.

The device supports a wide range of input sources, including standard USB host port, USB charging port and high power DC adapter. The bq24196 takes the result from detection circuit in the system, such as USB PHY device. The bq24196 is compliant with USB 2.0 and USB 3.0 power spec with input current and voltage regulation. Meanwhile, the bq24196 meets USB On-the-Go operation power rating specification by supplying 5 V on VBUS with current limit up to 1.3 A.

The power path management regulates the system slightly above battery voltage but does not drop below 3.5-V minimum system voltage (programmable). With this feature, the system maintains operation even when the battery is completely depleted or removed. When the input current limit or voltage limit is reached, the power path management automatically reduces the charge current to zero. As the system load continues to increase, the power path discharges the battery until the system power requirement is met. This supplement mode operation prevents overloading the input source.

The device initiates and completes a charging cycle without software control. It automatically detects the battery voltage and charges the battery in three phases: pre-conditioning, constant current and constant voltage. At the end of the charging cycle, the charger automatically terminates when the charge current is below a preset limit in the constant voltage phase. When the full battery falls below the recharge threshold, the charger will automatically start another charging cycle.

The device provides various safety features for battery charging and system operation, including negative thermistor monitoring, charging safety timer and over-voltage/over-current protections. The thermal regulation reduces charge current when the junction temperature exceeds 120°C (programmable).

The STAT output reports the charging status and any fault conditions. The $\overline{PG}$ output in the bq24196 indicates if a good power source is present. The INT immediately notifies the host when a fault occurs.

The bq24196 is available in a 24-pin, 4.00 x 4.00 mm^2 thin VQFN package.

6 Pin Configuration and Functions

RGE Package
24-Pin VQFN With Exposed Thermal Pad
(Top View)

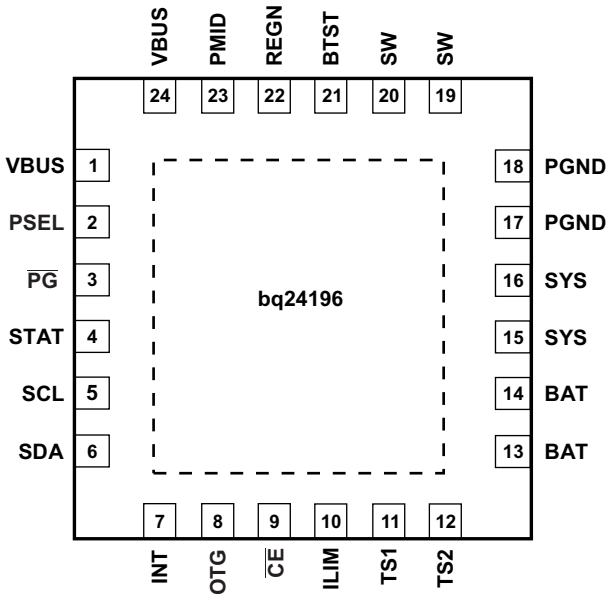

Pin Functions

PIN		TYPE	DESCRIPTION
NAME	NUMBER		
VBUS	1,24	P	Charger Input Voltage. The internal n-channel reverse block MOSFET (RBFET) is connected between VBUS and PMID with VBUS on source. Place a 1-µF ceramic capacitor from VBUS to PGND and place it as close as possible to IC. (Refer to Application Information Section for details)
PSEL	2	I Digital	Power source selection input. High indicates a USB host source and Low indicates an adapter source.
$\overline{PG}$	3	O Digital	Open drain active low power good indicator. Connect to the pull up rail via 10-kΩ resistor. LOW indicates a good input source if the input voltage is between UVLO and ACOV, above SLEEP mode threshold, and current limit is above 30 mA.
STAT	4	O Digital	Open drain charge status output to indicate various charger operation. Connect to the pull up rail via 10-kΩ. LOW indicates charge in progress. HIGH indicates charge complete or charge disabled. When any fault condition occurs, STAT pin blinks at 1 Hz.
SCL	5	I Digital	I^2C Interface clock. Connect SCL to the logic rail through a 10-kΩ resistor.
SDA	6	I/O Digital	I^2C Interface data. Connect SDA to the logic rail through a 10-kΩ resistor.
INT	7	O Digital	Open-drain Interrupt Output. Connect the INT to a logic rail via 10-kΩ resistor. The INT pin sends active low, 256-us pulse to host to report charger device status and fault.
OTG	8	I Digital	USB current limit selection pin during buck mode, and active high enable pin during boost mode. In buck mode with USB host (PSEL=High), when OTG = High, IIN limit = 500 mA and when OTG = Low, IIN limit = 100 mA. The boost mode is activated when the REG01[5:4] = 10 and OTG pin is High.
$\overline{CE}$	9	I Digital	Active low Charge Enable pin. Battery charging is enabled when REG01[5:4] = 01 and $\overline{CE}$ pin = Low. $\overline{CE}$ pin must be pulled high or low.
ILIM	10	I Analog	ILIM pin sets the maximum input current limit by regulating the ILIM voltage at 1 V. A resistor is connected from ILIM pin to ground to set the maximum limit as $I_{INMAX} = (1V/R_{ILIM}) \times 530$. The actual input current limit is the lower one set by ILIM and by I^2C REG00[2:0]. The minimum input current programmed on ILIM pin is 500 mA.
TS1	11	I Analog	Temperature qualification voltage input #1. Connect a negative temperature coefficient thermistor. Program temperature window with a resistor divider from REGN to TS1 to GND. Charge suspends when either TS pin is out of range. Recommend 103AT-2 thermistor.
TS2	12	I Analog	Temperature qualification voltage input #2. Connect a negative temperature coefficient thermistor. Program temperature window with a resistor divider from REGN to TS2 to GND. Charge suspends when either TS pin is out of range. Recommend 103AT-2 thermistor. TS1 and TS2 pin can be connected together for single thermistor application.

Copyright © 2012–2014, Texas Instruments Incorporated

Pin Functions (continued)

PIN		TYPE	DESCRIPTION
NAME	NUMBER		
BAT	13,14	P	Battery connection point to the positive terminal of the battery pack. The internal BATFET is connected between BAT and SYS. Connect a 10 µF closely to the BAT pin.
SYS	15,16	P	System connection point. The internal BATFET is connected between BAT and SYS. When the battery falls below the minimum system voltage, switch-mode converter keeps SYS above the minimum system voltage. (Refer to Application Information Section for inductor and capacitor selection.)
PGND	17,18	P	Power ground connection for high-current power converter node. Internally, PGND is connected to the source of the n-channel LSFET. On PCB layout, connect directly to ground connection of input and output capacitors of the charger. A single point connection is recommended between power PGND and the analog GND near the IC PGND pin.
SW	19,20	O Analog	Switching node connecting to output inductor. Internally SW is connected to the source of the n-channel HSFET and the drain of the n-channel LSFET. Connect the 0.047-µF bootstrap capacitor from SW to BTST.
BTST	21	P	PWM high side driver positive supply. Internally, the BTST is connected to the anode of the boost-strap diode. Connect the 0.047-µF bootstrap capacitor from SW to BTST.
REGN	22	P	PWM low side driver positive supply output. Internally, REGN is connected to the cathode of the boost-strap diode. Connect a 4.7-µF (10-V rating) ceramic capacitor from REGN to analog GND. The capacitor should be placed close to the IC. REGN also serves as bias rail of TS1 and TS2 pins.
PMID	23	O Analog	Connected to the drain of the reverse blocking MOSFET and the drain of HSFET. Given the total input capacitance, connect a 1-µF capacitor on VBUS to PGND, and the rest all on PMID to PGND. (Refer to Application Information Section for details)
Thermal Pad	–	P	Exposed pad beneath the IC for heat dissipation. Always solder thermal pad to the board, and have vias on the thermal pad plane star-connecting to PGND and ground plane for high-current power converter.

7 Specifications

7.1 Absolute Maximum Ratings(1)

over operating free-air temperature range (unless otherwise noted)

		MIN	MAX	UNIT
Voltage range (with respect to GND)	VBUS	–2	22	V
	PMID	–0.3	22	V
	STAT, $\overline{PG}$	–0.3	20	V
	BTST	–0.3	26	V
	SW	–2	20	V
	BAT, SYS (converter not switching)	–0.3	6	V
	SDA, SCL, INT, OTG, ILIM, REGN, TS1, TS2, $\overline{CE}$, PSEL	–0.3	7	V
	BTST TO SW	–0.3	–7	V
	PGND to GND	–0.3	–0.3	V
Output sink current	INT, STAT, $\overline{PG}$		6	mA
Junction temperature		–40°C	150	°C
Storage temperature, T_{stg}		–65	150	°C

(1) Stresses beyond those listed under absolute maximum ratings may cause permanent damage to the device. These are stress ratings only, and functional operation of the device at these or any other conditions beyond those indicated under recommended operating conditions is not implied. Exposure to absolute-maximum-rated conditions for extended periods may affect device reliability. All voltage values are with respect to the network ground terminal unless otherwise noted.

7.2 ESD Ratings

			VALUE	UNIT
$V_{(ESD)}$	Electrostatic discharge	Human body model (HBM), per ANSI/ESDA/JEDEC JS-001(1)	1000	V
		Charged device model (CDM), per JEDEC specification JESD22-C101(2)	250	

(1) JEDEC document JEP155 states that 500-V HBM allows safe manufacturing with a standard ESD control process.
(2) JEDEC document JEP157 states that 250-V CDM allows safe manufacturing with a standard ESD control process.

7.3 Recommended Operating Conditions

		MIN	MAX	UNIT
V_{IN}	Input voltage	3.9	17 (1)	V
I_{IN}	Input current		3	A
I_{SYS}	Output current (SYS)		2.5	A
V_{BAT}	Battery voltage		4.4	V
I_{BAT}	Fast charging current		2.5	A
	Discharging current with internal MOSFET		6 (continuous) 9 (peak) (up to 1 sec duration)	A
T_A	Operating free-air temperature range	–40	85	°C

(1) The inherent switching noise voltage spikes should not exceed the absolute maximum rating on either the BTST or SW pins. A tight layout minimizes switching noise.

7.4 Thermal Information

THERMAL METRIC (1)		bq24196 RGE (24 PIN)	UNIT
$R_{\theta JA}$	Junction-to-ambient thermal resistance	32.2	°C/W
$R_{\theta JCtop}$	Junction-to-case (top) thermal resistance	29.8	
$R_{\theta JB}$	Junction-to-board thermal resistance	9.1	
ψ_{JT}	Junction-to-top characterization parameter	0.3	
ψ_{JB}	Junction-to-board characterization parameter	9.1	
$R_{\theta JCbot}$	Junction-to-case (bottom) thermal resistance	2.2	

(1) For more information about traditional and new thermal metrics, see the *IC Package Thermal Metrics* application report, SPRA953.

7.5 Electrical Characteristics

$V_{VBUS_UVLOZ} < V_{VBUS} < V_{ACOV}$ and $V_{VBUS} > V_{BAT} + V_{SLEEP}$, T_J = –40°C to 125°C and T_J = 25°C for typical values unless other noted.

PARAMETER		TEST CONDITIONS	MIN	TYP	MAX	UNIT
QUIESCENT CURRENTS						
I_{BAT}	Battery discharge current (BAT, SW, SYS)	$V_{VBUS} < V_{UVLO}$, VBAT = 4.2 V, leakage between BAT and VBUS			5	µA
		High-Z Mode, or no VBUS, BATFET disabled (REG07[5] = 1), –40°C to 85°C		12	20	µA
		High-Z Mode, or no VBUS, REG07[5] = 0, –40°C to 85°C		32	55	µA
I_{VBUS}	Input supply current (VBUS)	V_{VBUS} = 5 V, High-Z mode		15	30	µA
		V_{VBUS} = 17 V, High-Z mode		30	50	µA
		$V_{VBUS} > V_{UVLO}$, $V_{VBUS} > V_{BAT}$, converter not switching		1.5	3	mA
		$V_{VBUS} > V_{UVLO}$, $V_{VBUS} > V_{BAT}$, converter switching, V_{BAT} = 3.2 V, I_{SYS} = 0 A		4		mA
		$V_{VBUS} > V_{UVLO}$, $V_{VBUS} > V_{BAT}$, converter switching, V_{BAT} = 3.8 V, I_{SYS} = 0 A		15		mA
$I_{OTGBOOST}$	Battery discharge current in boost mode	VBAT = 4.2 V, Boost mode, I_{VBUS} = 0 A, converter switching		4		mA
VBUS/BAT POWER UP						
V_{VBUS_OP}	VBUS operating range		3.9		17	V
V_{VBUS_UVLOZ}	VBUS for active I^2C, no battery	V_{VBUS} rising	3.6			V
V_{SLEEP}	Sleep mode falling threshold	V_{VBUS} falling, $V_{VBUS-VBAT}$	35	80	120	mV
V_{SLEEPZ}	Sleep mode rising threshold	V_{VBUS} rising, $V_{VBUS-VBAT}$	170	250	350	mV
V_{ACOV}	VBUS over-voltage rising threshold	V_{VBUS} rising	17.4	18		V
V_{ACOV_HYST}	VBUS over-voltage falling hysteresis	V_{VBUS} falling		700		mV
V_{BAT_UVLOZ}	Battery for active I^2C, no VBUS	V_{BAT} rising	2.3			V

Copyright © 2012–2014, Texas Instruments Incorporated

Electrical Characteristics (continued)

$V_{VBUS_UVLOZ} < V_{VBUS} < V_{ACOV}$ and $V_{VBUS} > V_{BAT} + V_{SLEEP}$, T_J = –40°C to 125°C and T_J = 25°C for typical values unless other noted.

PARAMETER		TEST CONDITIONS	MIN	TYP	MAX	UNIT
V_{BAT_DPL}	Battery depletion threshold	V_{BAT} falling		2.4	2.6	V
$V_{BAT_DPL_HY}$	Battery depletion rising hysteresis	V_{BAT} rising		170	260	mV
$V_{VBUSMIN}$	Bad adapter detection threshold	V_{VBUS} falling		3.8		V
I_{BADSRC}	Bad adapter detection current source			30		mA
t_{BADSRC}	Bad source detection duration			30		ms
POWER PATH MANAGEMENT						
V_{SYS_RANGE}	Typical system regulation voltage	Isys = 0 A, Q4 off, V_{BAT} up to 4.2 V, REG01[3:1] = 101, V_{SYSMIN} = 3.5 V	3.5		4.35	V
V_{SYS_MIN}	System voltage output	REG01[3:1] = 101, V_{SYSMIN} = 3.5 V	3.55	3.65		V
$R_{ON(RBFET)}$	Internal top reverse blocking MOSFET on-resistance	Measured between VBUS and PMID		23	38	mΩ
$R_{ON(HSFET)}$	Internal top switching MOSFET on-resistance between PMID and SW	T_J = –40°C to 85°C		30	38	mΩ
		T_J = -40°C to 125°C		30	48	
$R_{ON(LSFET)}$	Internal bottom switching MOSFET on-resistance between SW and PGND	T_J = –40°C to 85°C		35	48	mΩ
		T_J = -40°C to 125°C		35	51	
V_{FWD}	BATFET forward voltage in supplement mode	BAT discharge current 10 mA		30		mV
V_{SYS_BAT}	SYS/BAT Comparator	V_{SYS} falling		90		mV
V_{BATGD}	Battery good comparator rising threshold	V_{BAT} rising		3.55		V
V_{BATGD_HYST}	Battery good comparator falling threshold	V_{BAT} falling		100		mV
BATTERY CHARGER						
$V_{BAT_REG_ACC}$	Charge voltage regulation accuracy	V_{BAT} = 4.208 V	–0.5%		0.5%	
$I_{ICHG_REG_ACC}$	Fast charge current regulation accuracy	V_{BAT} = 3.8 V, I_{CHG} = 1792 mA, T_J = 25°C	–4%		4%	
		V_{BAT} = 3.8 V, I_{CHG} = 1792 mA, T_J = –20°C to 125°C	–7%		7%	
I_{CHG_20pct}	Charge current with 20% option on	V_{BAT} = 3.1 V, I_{CHG} = 104 mA, REG02 = 03	75	100	150	mA
$V_{BATLOWV}$	Battery LOWV falling threshold	Fast charge to precharge, REG04[1] = 1	2.6	2.8	2.9	V
$V_{BATLOWV_HYST}$	Battery LOWV rising threshold	Precharge to fast charge, REG04[1] = 1	2.8	3.0	3.1	V
I_{PRECHG_ACC}	Precharge current regulation accuracy	VBAT = 2.6 V, I_{CHG} = 256 mA	–20%		20%	
I_{TERM_ACC}	Termination current accuracy	I_{TERM} = 256 mA, I_{CHG} = 960 mA	–20%		20%	
V_{SHORT}	Battery Short Voltage	VBAT falling		2.0		V
V_{SHORT_HYST}	Battery Short Voltage hysteresis	VBAT rising		200		mV
I_{SHORT}	Battery short current	VBAT < 2.2V		100		mA
V_{RECHG}	Recharge threshold below VBAT_REG	VBAT falling, REG04[0] = 0		100		mV
t_{RECHG}	Recharge deglitch time	VBAT falling, REG04[0] = 0		20		ms
R_{ON_BATFET}	SYS-BAT MOSFET on-resistance	T_J = 25°C		12	15	mΩ
		T_J = –40°C to 125°C		12	20	

Copyright © 2012–2014, Texas Instruments Incorporated

Electrical Characteristics (continued)

$V_{VBUS_UVLOZ} < V_{VBUS} < V_{ACOV}$ and $V_{VBUS} > V_{BAT} + V_{SLEEP}$, T_J = –40°C to 125°C and T_J = 25°C for typical values unless other noted.

PARAMETER		TEST CONDITIONS	MIN	TYP	MAX	UNIT
INPUT VOLTAGE/CURRENT REGULATION						
$V_{INDPM_REG_ACC}$	Input voltage regulation accuracy	REG00[6:3] = 0110 (4.36 V) or 1011 (4.76 V)	–2%		2%	
I_{USB_DPM}	USB Input current regulation limit, VBUS = 5 V, current pulled from SW	USB100	85		100	mA
		USB150	125		150	mA
		USB500	440		500	mA
		USB900	750		900	mA
I_{ADPT_DPM}	Input current regulation accuracy		1.35	1.5	1.65	A
I_{IN_START}	Input current limit during system start up	VSYS < 2.2 V		100		mA
K_{ILIM}	$I_{IN} = K_{ILIM}/R_{ILIM}$	IINDPM = 1.5 A	435	485	530	A x Ω
BAT OVER-VOLTAGE PROTECTION						
V_{BATOVP}	Battery over-voltage threshold	V_{BAT} rising, as percentage of V_{BAT_REG}		104%		
V_{BATOVP_HYST}	Battery over-voltage hysteresis	V_{BAT} falling, as percentage of V_{BAT_REG}		2%		
t_{BATOVP}	Battery over-voltage deglitch time to disable charge			1		µs
THERMAL REGULATION AND THERMAL SHUTDOWN						
$T_{Junction_REG}$	Junction temperature regulation accuracy	REG06[1:0] = 11		120		°C
T_{SHUT}	Thermal shutdown rising temperature	Temperature increasing		160		°C
T_{SHUT_HYS}	Thermal shutdown hysteresis			30		°C
	Thermal shutdown rising deglitch	Temperature increasing delay		1		ms
	Thermal shutdown falling deglitch	Temperature decreasing delay		1		ms
COLD/HOT THERMISTER COMPARATOR						
V_{LTF}	Cold temperature threshold, TS pin voltage rising threshold	Charger suspends charge. As percentage to V_{REGN}	73%	73.5 %	74%	
V_{LTF_HYS}	Cold temperature hysteresis, TS pin voltage falling	As percentage to V_{REGN}	0.2%	0.4%	0.6%	
V_{HTF}	Hot temperature TS pin voltage threshold	As percentage to V_{REGN}	46.6%	47.2 %	48.8%	
V_{TCO}	Cut-off temperature TS pin voltage falling threshold	As percentage to V_{REGN}	44.2%	44.7 %	45.2%	
	Deglitch time for temperature out of range detection	$V_{TS} > V_{LTF}$, or $V_{TS} < V_{TCO}$, or $V_{TS} < V_{HTF}$		10		ms
CHARGE OVER-CURRENT COMPARATOR						
I_{HSFET_OCP}	HSFET over-current threshold		5.3	7		A
I_{BATFET_OCP}	System over load threshold		9			A
CHARGE UNDER-CURRENT COMPARATOR (CYCLE-BY-CYCLE)						
V_{LSFET_UCP}	LSFET charge under-current falling threshold	From sync mode to non-sync mode		100		mA
PWM OPERATION						
F_{SW}	PWM Switching frequency, and digital clock		1300	1500	1700	kHz
D_{MAX}	Maximum PWM duty cycle			97%		
$V_{BTST_REFRESH}$	Bootstrap refresh comparator threshold	VBTST-VSW when LSFET refresh pulse is requested, VBUS = 5 V		3.6		V
		VBTST-VSW when LSFET refresh pulse is requested, VBUS > 6 V		4.5		
BOOST MODE OPERATION						
V_{OTG_REG}	OTG output voltage	I(VBUS) = 0		5.00		V
$V_{OTG_REG_ACC}$	OTG output voltage accuracy	I(VBUS) = 0	–2%		2%	
I_{OTG}	OTG mode output current	REG01[0] = 0	0.5			A
		REG01[0] = 1	1.3			A
V_{OTG_OVP}	OTG over-voltage threshold			5.3	5.5	V
I_{OTG_ILIM}	LSFET cycle-by-cycle current limit		3.2	4.6		A
I_{OTG_HSZCP}	HSFET under current falling threshold			100		mA

Copyright © 2012–2014, Texas Instruments Incorporated

Electrical Characteristics (continued)

$V_{VBUS_UVLOZ} < V_{VBUS} < V_{ACOV}$ and $V_{VBUS} > V_{BAT} + V_{SLEEP}$, T_J = –40°C to 125°C and T_J = 25°C for typical values unless other noted.

PARAMETER		TEST CONDITIONS	MIN	TYP	MAX	UNIT
I_{RBFET_OCP}	RBFET over-current threshold	REG01[0] = 1	1.4	1.8	2.7	A
		REG01[0] = 0	0.6	1.1	1.8	
REGN LDO						
V_{REGN}	REGN LDO output voltage	V_{VBUS} = 10 V, I_{REGN} = 40 mA	5.6	6	6.4	V
		V_{VBUS} = 5 V, I_{REGN} = 20 mA	4.75	4.8		V
I_{REGN}	REGN LDO current limit	V_{VBUS} = 10 V, V_{REGN} = 3.8 V	50			mA
LOGIC I/O PIN CHARACTERISTICS (OTG, $\overline{CE}$, PSEL, STAT, $\overline{PG}$)						
V_{ILO}	Input low threshold				0.4	V
V_{IH}	Input high threshold		1.3			V
V_{OUT_LO}	Output low saturation voltage	Sink current = 5 mA			0.4	V
I_{BIAS}	High level leakage current	Pull up rail 1.8 V			1	µA
I^2C INTERFACE (SDA, SCL, INT)						
V_{IH}	Input high threshold level	VPULL-UP = 1.8 V, SDA and SCL	1.3			V
V_{IL}	Input low threshold level	VPULL-UP = 1.8 V, SDA and SCL			0.4	V
V_{OL}	Output low threshold level	Sink current = 5 mA			0.4	V
I_{BIAS}	High-level leakage current	VPULL-UP = 1.8 V, SDA and SCL			1	µA
f_{SCL}	SCL clock frequency				400	kHz
DIGITAL CLOCK AND WATCHDOG TIMER						
f_{HIZ}	Digital crude clock	REGN LDO disabled	15	35	50	kHz
f_{DIG}	Digital clock	REGN LDO enabled	1300	1500	1700	kHz
t_{WDT}	REG05[5:4] = 11	REGN LDO enabled	136	160		sec

7.6 Typical Characteristics

Table 1. Table of Figures

	FIGURE NO.
System Light Load Efficiency vs System Load Current	Figure 1
SYS Voltage Regulation vs System Load	Figure 2
Charging Efficiency vs Charging Current	Figure 3
Boost Mode Efficiency vs VBUS Load Current	Figure 4
Boost Mode VBUS Voltage Regulation vs VBUS Load Current	Figure 5
SYS Voltage vs Temperature	Figure 6
BAT Voltage vs Temperature	Figure 7
Input Current Limit vs Temperature	Figure 8
Charge Current vs Temperature	Figure 9

Copyright © 2012–2014, Texas Instruments Incorporated

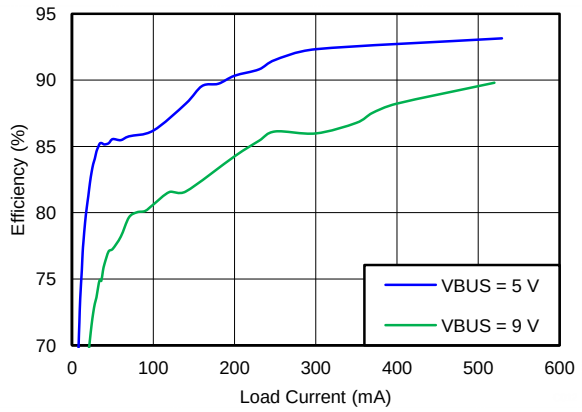

Figure 1. System Light Load Efficiency vs System Load Current

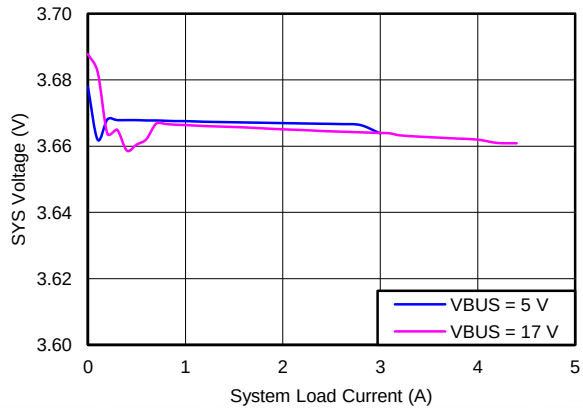

Figure 2. SYS Voltage Regulation vs System Load

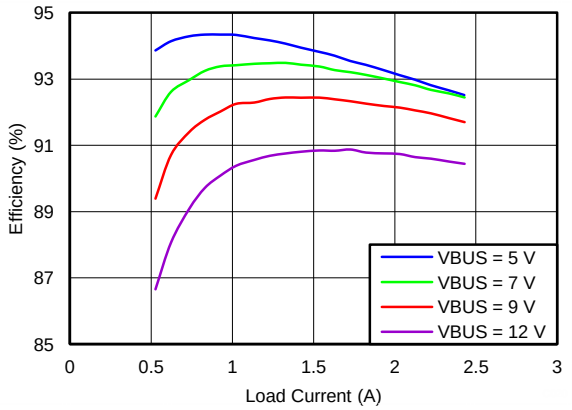

Figure 3. Charging Efficiency vs Charging Current

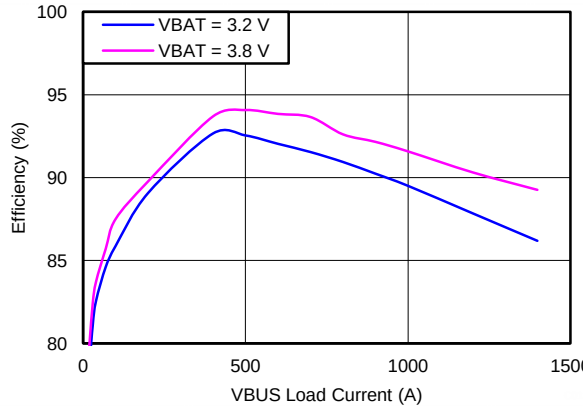

Figure 4. Boost Mode Efficiency vs VBUS Load Current

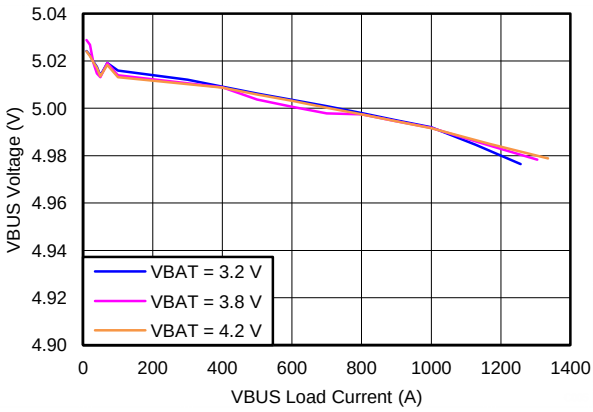

Figure 5. Boost Mode VBUS Voltage Regulation vs VBUS Load Current

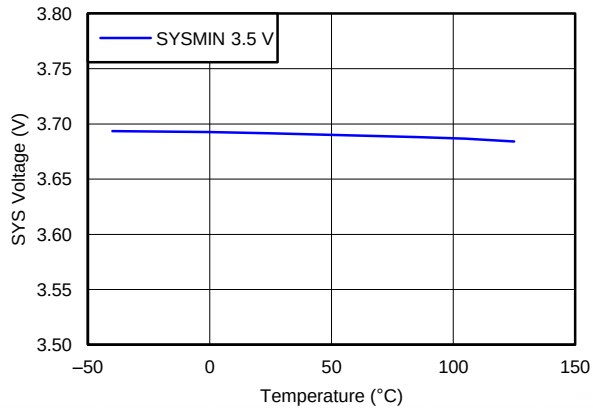

Figure 6. SYS Voltage vs Temperature

Copyright © 2012–2014, Texas Instruments Incorporated

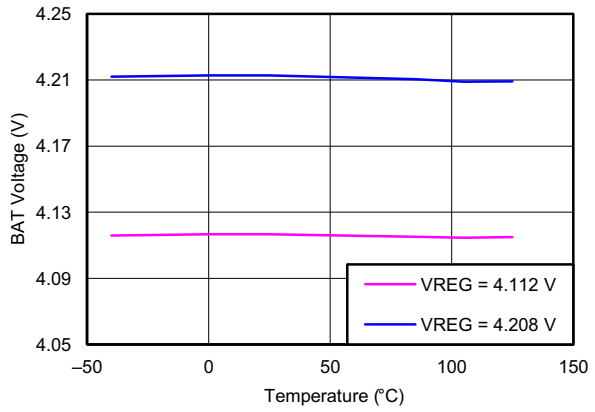

Figure 7. BAT Voltage vs Temperature

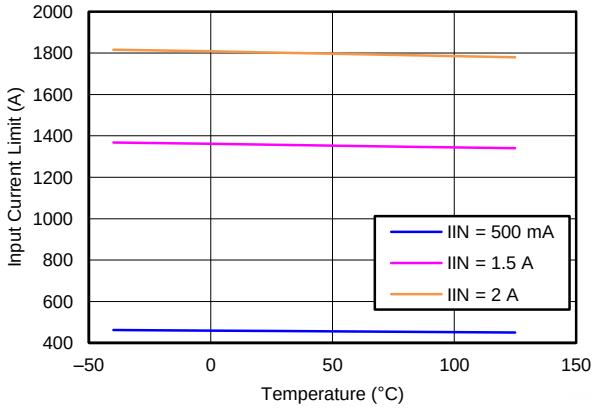

Figure 8. Input Current Limit vs Temperature

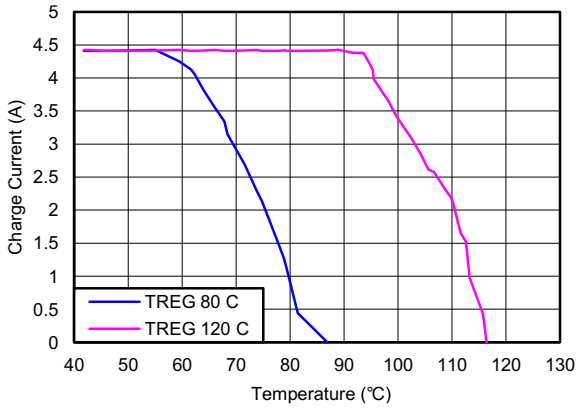

Figure 9. Charge Current vs Temperature

8 Detailed Description

8.1 Overview

The bq24196 is an I²C controlled power path management device and a single cell Li-Ion battery charger. It integrates the input reverse-blocking FET (RBFET, Q1), high-side switching FET (HSFET, Q2), low-side switching FET (LSFET, Q3), and BATFET (Q4) between system and battery. The device also integrates the bootstrap diode for the high-side gate drive.

8.2 Functional Block Diagram

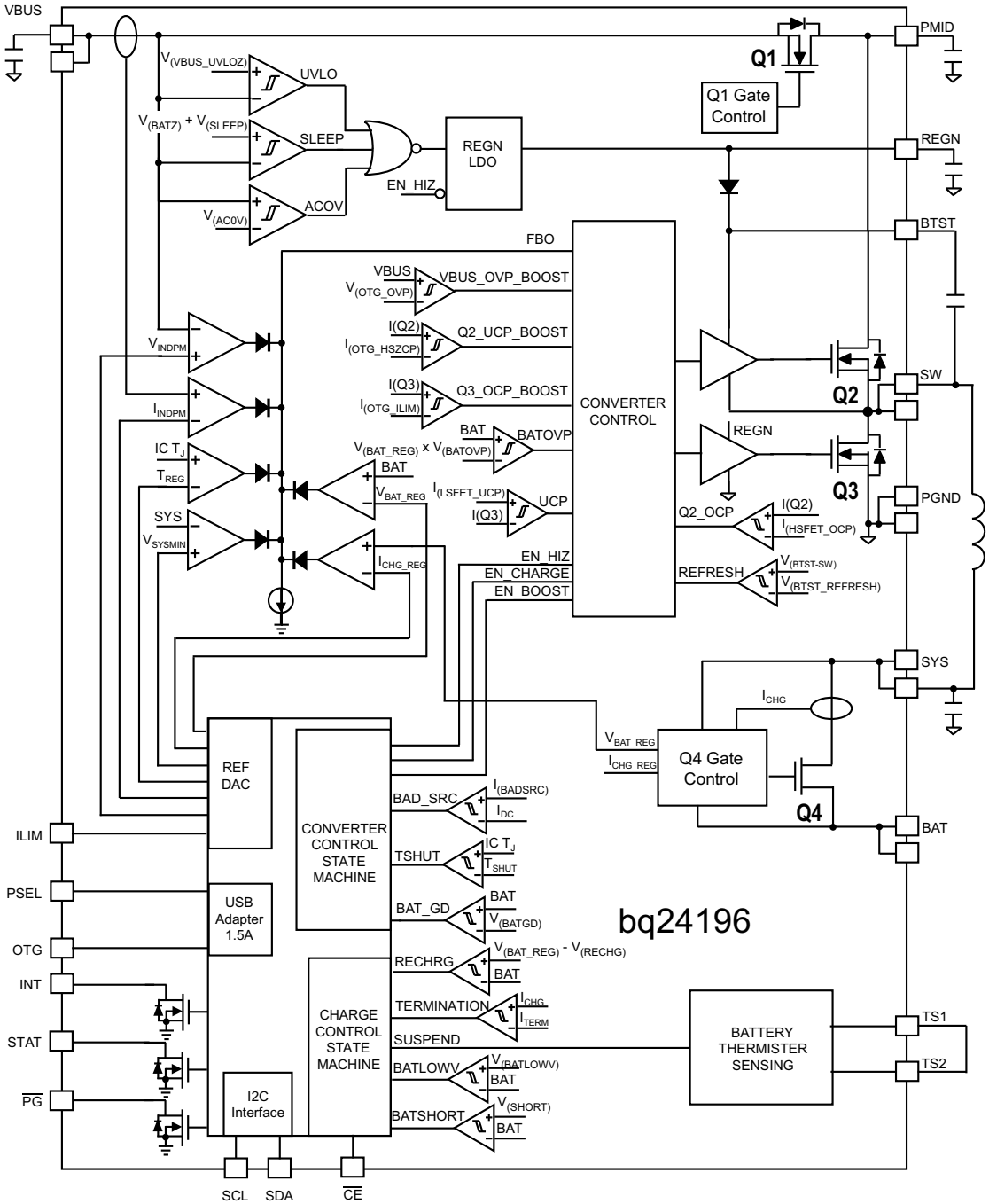

Copyright © 2012–2014, Texas Instruments Incorporated

8.3 Feature Description

8.3.1 Device Power Up

8.3.1.1 Power-On-Reset (POR)

The internal bias circuits are powered from the higher voltage of VBUS and BAT. When VBUS or VBAT rises above UVLOZ, the sleep comparator, battery depletion comparator and BATFET driver are active. I^2C interface is ready for communication and all the registers are reset to default value. The host can access all the registers after POR.

8.3.1.2 Power Up from Battery without DC Source

If only battery is present and the voltage is above depletion threshold (V_{BAT_DEPL}), the BATFET turns on and connects battery to system. The REGN LDO stays off to minimize the quiescent current. The low R_{DSON} in BATFET and the low quiescent current on BAT minimize the conduction loss and maximize the battery run time. The device always monitors the discharge current through BATFET. When the system is overloaded or shorted, the device will immediately turn off BATFET and keep BATFET off until the input source plugs in again.

8.3.1.2.1 BATFET Turn Off

The BATFET can be forced off by the host through I^2C REG07[5]. This bit allows the user to independently turn off the BATFET when the battery condition becomes abnormal during charging. When BATFET is off, there is no path to charge or discharge the battery.

When battery is not attached, the BATFET should be turned off by setting REG07[5] to 1 to disable charging and supplement mode.

8.3.1.2.2 Shipping Mode

When end equipment is assembled, the system is connected to battery through BATFET. There will be a small leakage current to discharge the battery even when the system is powered off. In order to extend the battery life during shipping and storage, the device can turn off BATFET so that the system voltage is zero to minimize the leakage.

In order to keep BATFET off during shipping mode, the host has to disable the watchdog timer (REG05[5:4] = 00) and disable BATFET (REG07[5] = 1) at the same time.

Once the BATFET is disabled, the BATFET can be turned on by plugging in adapter.

8.3.1.3 Power Up from DC Source

When the DC source plugs in, the bq24196 checks the input source voltage to turn on REGN LDO and all the bias circuits. It also checks the input current limit before starts the buck converter.

8.3.1.3.1 REGN LDO

The REGN LDO supplies internal bias circuits as well as the HSFET and $\overline{\text{LS}}$FET gate drive. The LDO also provides bias rail to TS1/TS2 external resistors. The pull-up rail of STAT and $\overline{\text{PG}}$ can be connected to REGN as well.

The REGN is enabled when all the conditions are valid.

1. VBUS above UVLOZ
2. VBUS above battery + V_{SLEEPZ} in buck mode or VBUS below battery + V_{SLEEPZ} in boost mode
3. After typical 220ms delay (100ms minimum) is complete

If one of the above conditions is not valid, the device is in high impedance mode (HIZ) with REGN LDO off. The device draws less than 50 µA from VBUS during HIZ state. The battery powers up the system when the device is in HIZ.

8.3.1.3.2 Input Source Qualification

After REGN LDO powers up, the bq24196 checks the current capability of the input source. The input source has to meet the following requirements to start the buck converter.

Feature Description (continued)

1. VBUS voltage below 18 V (not in ACOV)
2. VBUS voltage above 3.8 V when pulling 30 mA (poor source detection)

Once the input source passes all the conditions above, the status register REG08[2] goes high and the $\overline{PG}$ pin goes low. An INT is asserted to the host.

If the device fails the poor source detection, it will repeat the detection every 2 seconds.

8.3.1.3.3 Input Current Limit Detection

The USB ports on personal computers are convenient charging source for portable devices (PDs). If the portable device is attached to a USB host, the USB specification requires the portable device to draw limited current (100 mA/500 mA in USB 2.0, and 150 mA/900 mA in USB 3.0). If the portable device is attached to a charging port, it is allowed to draw up to 1.5 A.

After the $\overline{PG}$ is LOW or REG08[2] goes HIGH, the charger device always runs input current limit detection when a DC source plugs in unless the charger is in HIZ during host mode.

The bq24196 sets input current limit through PSEL and OTG pins.

After the input current limit detection is done, the host can write to REG00[2:0] to change the input current limit.

8.3.1.3.4 PSEL/OTG Pins Set Input Current Limit

The bq24196 has PSEL. It directly takes the USB PHY device output to decide whether the input is USB host or charging port.

Table 2. bq24196 Input Current Limit Detection

PSEL	OTG	INPUT CURRENT LIMIT	REG08[7:6]
HIGH	LOW	100 mA	01
HIGH	HIGH	500 mA	01
LOW	—	3 A	10

8.3.1.3.5 HIZ State wth 100mA USB Host

In battery charging spec, the good battery threshold is the minimum charge level of a battery to power up the portable device successfully. When the input source is 100-mA USB host, and the battery is above bat-good threshold (V_{BATGD}), the device follows battery charging spec and enters high impedance state (HIZ). In HIZ state, the device is in the lowest quiescent state with REGN LDO and the bias circuits off. The charger device sets REG00[7] to 1, and the VBUS current during HIZ state will be less than 30 µA. The system is supplied by the battery.

Once the charger device enters HIZ state in host mode, it stays in HIZ until the host writes REG00[7] = 0. When the processor host wakes up, it is recommended to first check if the charger is in HIZ state.

In default mode, the charger IC will reset REG00[7] back to 0 when input source is removed. When another source plugs in, the charger IC will run detection again, and update the input current limit.

8.3.1.3.6 Force Input Current Limit Detection

The host can force the charger device to run input current limit detection by setting REG07[7] = 1. After the detection is complete, REG07[7] will return to 0 by itself.

8.3.1.4 Converter Power-Up

After the input current limit is set, the converter is enabled and the HSFET and LSFET start switching. If battery charging is disabled, BATFET turns off. Otherwise, BATFET stays on to charge the battery.

The bq24196 provides soft-start when ramp up the system rail. When the system rail is below 2.2 V, the input current limit is forced to 100 mA. After the system rises above 2.2 V, the charger device sets the input current limit set by the lower value between register and ILIM pin.

Copyright © 2012–2014, Texas Instruments Incorporated

As a battery charger, the bq24196 deploys a 1.5-MHz step-down switching regulator. The fixed frequency oscillator keeps tight control of the switching frequency under all conditions of input voltage, battery voltage, charge current and temperature, simplifying output filter design.

A type III compensation network allows using ceramic capacitors at the output of the converter. An internal saw-tooth ramp is compared to the internal error control signal to vary the duty cycle of the converter. The ramp height is proportional to the PMID voltage to cancel out any loop gain variation due to a change in input voltage.

In order to improve light-load efficiency, the device switches to PFM control at light load when battery is below minimum system voltage setting or charging is disabled. During the PFM operation, the switching duty cycle is set by the ratio of SYS and VBUS.

8.3.1.5 Boost Mode Operation from Battery

The bq24196 supports boost converter operation to deliver power from the battery to other portable devices through USB port. The boost mode output current rating meets the USB On-The-Go 500-mA output requirement. The maximum output current is 1.3 A. The boost operation can be enabled if the following conditions are valid:

1. BAT above BATLOWV threshold ($V_{BATLOWV}$ set by REG04[1])
2. VBUS less than BAT+V_{SLEEP} (in sleep mode)
3. Boost mode operation is enabled (OTG pin HIGH and REG01[5:4] = 10)
4. After 220-ms delay from boost mode enable

In boost mode, the bq24196 employs a 1.5-MHz step-up switching regulator. Similar to buck operation, the device switches from PWM operation to PFM operation at light load to improve efficiency.

During boost mode, the status register REG08[7:6] is set to 11, the VBUS output is 5 V and the output current can reach up to 500 mA or 1.3 A, selected via I^2C (REG01[0]).

Any fault during boost operation, including VBUS over-voltage or over-current, sets the fault register REG09[6] to 1 and an INT is asserted.

8.3.2 Power Path Management

The bq24196 accommodates a wide range of input sources from USB, wall adapter, to car battery. The device provides automatic power path selection to supply the system (SYS) from input source (VBUS), battery (BAT), or both.

8.3.2.1 Narrow VDC Architecture

The device deploys Narrow VDC architecture (NVDC) with BATFET separating system from battery. The minimum system voltage is set by REG01[3:1]. Even with a fully depleted battery, the system is regulated above the minimum system voltage (default 3.5 V).

When the battery is below minimum system voltage setting, the BATFET operates in linear mode (LDO mode), and the system is 150 mV above the minimum system voltage setting. As the battery voltage rises above the minimum system voltage, BATFET is fully on and the voltage difference between the system and battery is the V_{DS} of BATFET.

When the battery charging is disabled or terminated, the system is always regulated at 150 mV above the minimum system voltage setting. The status register REG08[0] goes high when the system is in minimum system voltage regulation.

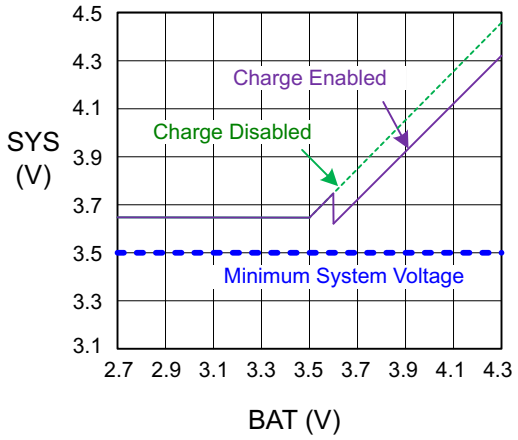

Figure 10. V(SYS) vs V(BAT)

8.3.2.2 Dynamic Power Management

To meet maximum current limit in USB spec and avoid over loading the adapter, the bq24196 features Dynamic Power Management (DPM), which continuously monitors the input current and input voltage.

When input source is over-loaded, either the current exceeds the input current limit (REG00[2:0]) or the voltage falls below the input voltage limit (REG00[6:3]). The device then reduces the charge current until the input current falls below the input current limit and the input voltage rises above the input voltage limit.

When the charge current is reduced to zero, but the input source is still overloaded, the system voltage starts to drop. Once the system voltage falls below the battery voltage, the device automatically enters the supplement mode where the BATFET turns on and battery starts discharging so that the system is supported from both the input source and battery.

During DPM mode (either VINDPM or IINDPM), the status register REG08[3] will go high.

Figure 11 shows the DPM response with 9-V/1.2-A adapter, 3.2-V battery, 2.8-A charge current and 3.4-V minimum system voltage setting.

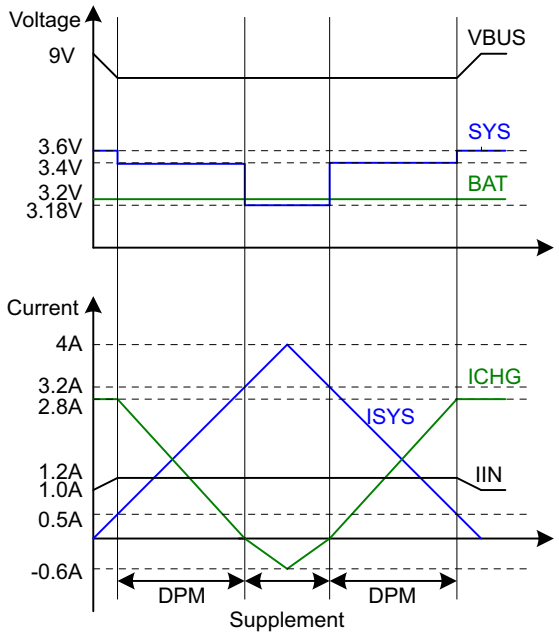

Figure 11. DPM Response

Copyright © 2012–2014, Texas Instruments Incorporated

8.3.2.3 Supplement Mode

When the system voltage falls below the battery voltage, the BATFET turns on and the BATFET gate is regulated the gate drive of BATFET so that the minimum BATFET V_{DS} stays at 30 mV when the current is low. This prevents oscillation from entering and exiting the supplement mode. As the discharge current increases, the BATFET gate is regulated with a higher voltage to reduce R_{DSON} until the BATFET is in full conduction. At this point onwards, the BATFET V_{DS} linearly increases with discharge current. Figure 12 shows the V-I curve of the BATFET gate regulation operation. BATFET turns off to exit supplement mode when the battery is below battery depletion threshold.

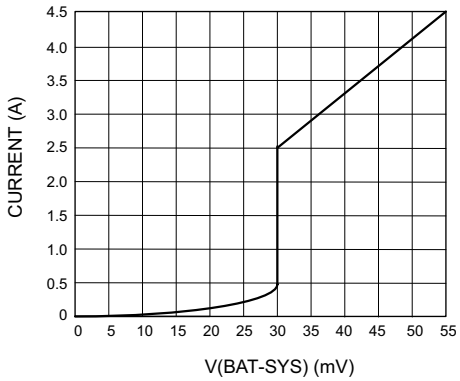

Figure 12. BATFET V-I Curve

8.3.3 Battery Charging Management

The bq24196 charges 1-cell Li-Ion battery with up to 2.5A charge current for high capacity tablet battery. The 12-mΩ BATFET improves charging efficiency and minimizes the voltage drop during discharging.

8.3.3.1 Autonomous Charging Cycle

With battery charging enabled at POR (REG01[5:4] = 01), the bq24196 can complete a charging cycle without host involvement. The device default charging parameters are listed in .

Table 3. Charging Parameter Default Setting

DEFAULT MODE	bq24196
Charging voltage	4.208 V
Charging current	2.048 A
Pre-charge current	256 mA
Termination current	256 mA
Temperature profile	Hot/Cold
Safety timer	8 hours

A new charge cycle starts when the following conditions are valid:

- Converter starts
- Battery charging is enabled by I^2C register bit (REG01[5:4]) = 01 and $\overline{CE}$ is low
- No thermistor fault on TS1 and TS2
- No safety timer fault
- BATFET is not forced to turn off (REG07[5])

The charger device automatically terminates the charging cycle when the charging current is below termination threshold and charge voltage is above recharge threshold. When a full battery voltage is discharged below recharge threshold (REG04[0]), the bq24196 automatically starts another charging cycle.

The STAT output indicates the charging status of charging (LOW), charging complete or charge disable (HIGH) or charging fault (Blinking). The status register REG08[5:4] indicates the different charging phases: 00-charging disable, 01-precharge, 10-fast charge (constant current) and constant voltage mode, 11-charging done. Once a charging cycle is complete, an INT is asserted to notify the host.

Copyright © 2012–2014, Texas Instruments Incorporated

The host can always control the charging operation and optimize the charging parameters by writing to the registers through I^2C.

8.3.3.2 Battery Charging Profile

The device charges the battery in three phases: preconditioning, constant current and constant voltage. At the beginning of a charging cycle, the device checks the battery voltage and applies current.

Table 4. Charging Current Setting

VBAT	CHARGING CURRENT	REG DEFAULT SETTING	REG08[5:4]
< 2 V	100 mA	–	01
2 V - 3 V	REG03[7:4]	256 mA	01
> 3 V	REG02[7:2]	2048 mA	10

If the charger device is in DPM regulation or thermal regulation during charging, the actual charging current will be less than the programmed value. In this case, termination is temporarily disabled and the charging safety timer is counted at half the clock rate.

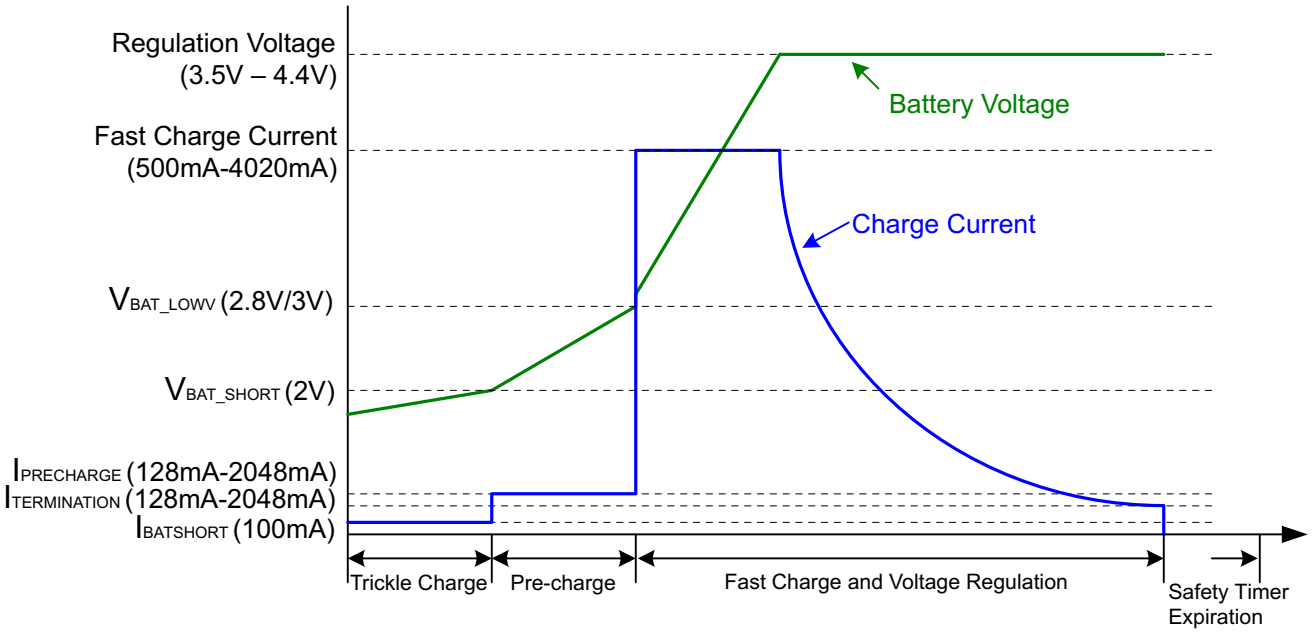

Figure 13. Battery Charging Profile

8.3.3.3 Thermistor Cold/Hot Temperature Window

The bq24196 continuously monitors battery temperature by measuring the voltage between the TS pins and ground, typically determined by a negative temperature coefficient thermistor and an external voltage divider. The device compares this voltage against its internal thresholds to determine if charging is allowed. To initiate a charge cycle, the battery temperature must be within the V_{LTF} to V_{HTF} thresholds. During the charge cycle the battery temperature must be within the V_{LTF} to V_{TCO} thresholds, else the device suspends charging and waits until the battery temperature is within the V_{LTF} to V_{HTF} range.

Copyright © 2012–2014, Texas Instruments Incorporated

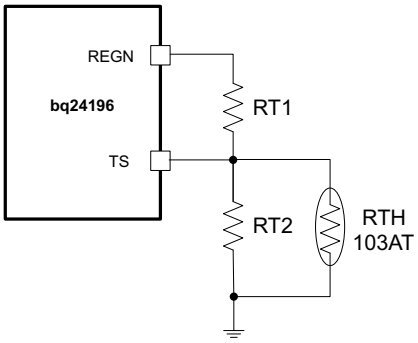

Figure 14. TS Resistor Network

When the TS fault occurs, the fault register REG09[2:0] indicates the actual condition on each TS pin and an INT is asserted to the host. The STAT pin indicates the fault when charging is suspended.

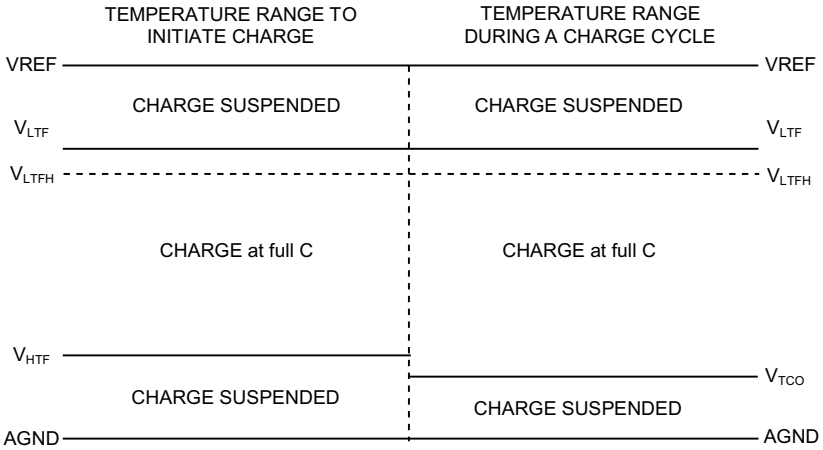

Figure 15. TS Pin Thermistor Sense Thresholds

Assuming a 103AT NTC thermistor is used on the battery pack, the value RT1 and RT2 can be determined by using the following equations:

$$RT2 = \frac{V_{VREF} \times RTH_{COLD} \times RTH_{HOT} \times \left(\frac{1}{V_{LTF}} - \frac{1}{V_{TCO}}\right)}{RTH_{HOT} \times \left(\frac{V_{VREF}}{V_{TCO}} - 1\right) - RTH_{COLD} \times \left(\frac{V_{VREF}}{V_{LTF}} - 1\right)}$$

$$RT1 = \frac{\frac{V_{VREF}}{V_{LTF}} - 1}{\frac{1}{RT2} + \frac{1}{RTH_{COLD}}} \quad (1)$$

Select 0°C to 45°C range for Li-ion or Li-polymer battery,
RTH_{COLD} = 27.28 kΩ
RTH_{HOT} = 4.911 kΩ
RT1 = 5.52 kΩ
RT2 = 31.23 kΩ

8.3.3.4 Charging Termination

The bq24196 terminates a charge cycle when the battery voltage is above recharge threshold, and the current is below termination current. After the charging cycle is complete, the BATFET turns off. The converter keeps running to power the system, and BATFET can turn back on to engage supplement mode.

When termination occurs, the status register REG08[5:4] is 11, and an INT is asserted to the host. Termination is temporarily disabled if the charger device is in input current/voltage regulation or thermal regulation. Termination can be disabled by writing 0 to REG05[7].

8.3.3.4.1 Termination when REG02[0] = 1

When REG02[0] is HIGH to reduce the charging current by 80%, the charging current could be less than the termination current. The charger device termination function should be disabled. When the battery is charged to fully capacity, the host disables charging through $\overline{CE}$ pin or REG01[5:4].

8.3.3.4.2 Termination when REG05[6] = 1

Usually the STAT bit indicates charging complete when the charging current falls below termination threshold. Write REG05[6] = 1 to enable an early “charge done” indication on STAT pin. The STAT pin goes high when the charge current reduces below 800 mA. The charging cycle is still on-going until the current falls below the termination threshold.

8.3.3.5 Charging Safety Timer

The bq24196 has safety timer to prevent extended charging cycle due to abnormal battery conditions.

In default mode, the device keeps charging the battery with 5-hour fast charging safety timer regardless of REG05[2:1] default value. At the end of the 5 hours, the EN_HIZ (REG00[7]) is set to signal the buck converter stops and the system load is supplied by the battery. The EN_HIZ bit can be cleared to restart the buck converter.

In host mode, the device keeps charging the battery until the fast charging safety timer expired. The duration of safety timer can be set by the REG05[2:1] bits (default = 8 hours). At the end of safety timer, the EN_HIZ (REG00[7]) is cleared to signal the buck converter continues to operation to supply system load.

The safety timer is 1 hour when the battery is below BATLOWV threshold. The user can program fast charge safety timer through I^2C (REG05[2:1]). When safety timer expires, the fault register REG09[5:4] goes 11 and an INT is asserted to the host. The safety timer feature can be disabled via I2C (REG05[3]).

The following actions restart the safety timer:

- At the beginning of a new charging cycle
- Toggle the $\overline{CE}$ pin HIGH to LOW to HIGH (charge enable)
- Write REG01[5:4] from 00 to 01 (charge enable)
- Write REG05[3] from 0 to 1 (safety timer enable)

During input voltage/current regulation or thermal regulation, or when FORCE_20PCT (REG02[0]) bit is set, the safety timer counts at half clock rate since the actual charge current is likely to be below the register setting. For example, if the charger is in input current regulation (IINDPM) throughout the whole charging cycle, and the safety time is set to 5 hours, the safety timer will expire in 10 hours. This feature can be disabled by writing 0 to REG07[6].

It is recommended to disable safety timer first by clearing REG05[3] bit before safety timer configuration is changed. The safety timer should be re-enabled by setting REG05[3] bit.

8.3.3.6 USB Timer when Charging from USB100mA Source

The total charging time in default mode from USB100-mA source is limited by a 45-min max timer. At the end of the timer, the device stops the converter and goes to HIZ.

8.3.4 Status Outputs ($\overline{PG}$, STAT, and INT)

8.3.4.1 Power Good Indicator ($\overline{PG}$)

In bq24196, $\overline{PG}$ goes LOW to indicate a good input source when:

Copyright © 2012–2014, Texas Instruments Incorporated

1. VBUS above UVLO
2. VBUS above battery (not in sleep)
3. VBUS below ACOV threshold
4. VBUS above 3.8 V when 30-mA current is applied (not a poor source)

8.3.4.2 Charging Status Indicator (STAT)

The bq24196 indicates charging state on the open drain STAT pin. The STAT pin can drive LED as the application diagram shows.

Table 5. STAT Pin State

CHARGING STATE	STAT
Charging in progress (including recharge)	LOW
Charging complete	HIGH
Sleep mode, charge disable	HIGH
Charge suspend (Input over-voltage, TS fault, timer fault, input or system over-voltage)	blinking at 1Hz

8.3.4.3 Interrupt to Host (INT)

In some applications, the host does not always monitor the charger operation. The INT notifies the system on the device operation. The following events will generate 256-us INT pulse.

- USB/adapter source identified (through PSEL and OTG pins)
- Good input source detected
  - $V_{VBUS} - V_{BAT} > V_{SLEEPZ}$
  - $V_{VBUS} > V_{ACOV}$
  - current limit above I_{BADSRC}
- Input removed
- Charge Complete
- Any FAULT event in REG09

When a fault occurs, the charger device sends out INT and keeps the fault state in REG09 until the host reads the fault register. Before the host reads REG09 and all the faults are cleared, the charger device would not send any INT upon new faults. In order to read the current fault status, the host has to read REG09 two times consecutively. The 1st reads fault register status from the last read and the 2nd reads the current fault register status.

8.3.5 Protections

8.3.5.1 Input Current Limit on ILIM

For safe operation, the bq24196 has an additional hardware pin on ILIM to limit maximum input current on ILIM pin. The input maximum current is set by a resistor from ILIM pin to ground as:

$$I_{INMAX} = \frac{1V}{R_{ILIM}} \times 530 \tag{2}$$

The actual input current limit is the lower value between ILIM setting and register setting (REG00[2:0]). For example, if the register setting is 111 for 3 A, and ILIM has a 353-Ω resistor to ground for 1.5 A, the input current limit is 1.5 A. ILIM pin can be used to set the input current limit rather than the register settings.

The device regulates ILIM pin at 1 V. If ILIM voltage exceeds 1 V, the device enters input current regulation (Refer to *Dynamic Power Path Management* section).

The voltage on the ILIM pin is proportional to the input current. The ILIM pin can be used to monitor the input current per Equation 3:

$$I_{IN} = \frac{V_{ILIM}}{1V} \times I_{INMAX} \tag{3}$$

For example, if the ILIM pin sets 2 A, and the ILIM voltage is 0.6 V, the actual input current is 1.2 A. If the ILIM pin is open, the input current is limited to zero since ILIM voltage floats above 1 V. If the ILIM pin is short, the input current limit is set by the register.

8.3.5.2 Thermal Regulation and Thermal Shutdown

The bq24196 monitors the internal junction temperature T_J to avoid overheat the chip and limits the IC surface temperature. When the internal junction temperature exceeds the preset limit (REG06[1:0]), the device lowers down the charge current. The wide thermal regulation range from 60°C to 120°C allows the user to optimize the system thermal performance.

During thermal regulation, the actual charging current is usually below the programmed battery charging current. Therefore, termination is disabled, the safety timer runs at half the clock rate, and the status register REG08[1] goes high.

Additionally, the device has thermal shutdown to turn off the converter. The fault register REG09[5:4] is 10 and an INT is asserted to the host.

8.3.5.3 Voltage and Current Monitoring in Buck Mode

The bq24196 closely monitor the input and system voltage, as well as HSFET and LSFET current for safe buck mode operation.

8.3.5.3.1 Input Over-Voltage (ACOV)

The maximum input voltage for buck mode operation is 18 V. If VBUS voltage exceeds 18 V, the device stops switching immediately. During input over voltage (ACOV), the fault register REG09[5:4] will be set to 01. An INT is asserted to the host.

8.3.5.3.2 System Over-Voltage Protection (SYSOVP)

The charger device monitors the voltage at SYS. When system over-voltage is detected, the converter is stopped to protect components connected to SYS from high voltage damage.

8.3.5.4 Voltage and Current Monitoring in Boost Mode

The bq24196 closely monitors the VBUS voltage, as well as HSFET and LSFET current to ensure safe boost mode operation.

8.3.5.4.1 VBUS Over-Voltage Protection

The boost mode regulated output is 5 V. When an adapter plugs in during boost mode, the VBUS voltage will rise above regulation target. Once the VBUS voltage exceeds 5.3 V, the bq24196 stops switching and the device exits boost mode. The fault register REG09[6] is set high to indicate fault in boost operation. An INT is asserted to the host.

8.3.5.5 Battery Protection

8.3.5.5.1 Battery Over-Current Protection (BATOVP)

The battery over-voltage limit is clamped at 4% above the battery regulation voltage. When battery over voltage occurs, the charger device immediately disables charge. The fault register REG09[5] goes high and an INT is asserted to the host.

8.3.5.5.2 Charging During Battery Short Protection

If the battery voltage falls below 2 V, the charge current is reduced to 100 mA for battery safety.

8.3.5.5.3 System Over-Current Protection

If the system is shorted or exceeds the over-current limit, the BATFET is latched off. DC source insertion on VBUS is required to reset the latch-off condition and turn on BATFET.

Copyright © 2012–2014, Texas Instruments Incorporated

8.3.6 Serial Interface

The bq24196 uses I^{2}C compatible interface for flexible charging parameter programming and instantaneous device status reporting. I^{2}C is a bi-directional 2-wire serial interface developed by Philips Semiconductor (now NXP Semiconductors). Only two bus lines are required: a serial data line (SDA) and a serial clock line (SCL). Devices can be considered as masters or slaves when performing data transfers. A master is the device which initiates a data transfer on the bus and generates the clock signals to permit that transfer. At that time, any device addressed is considered a slave.

The device operates as a slave device with address 6BH, receiving control inputs from the master device like micro controller or a digital signal processor. The I^{2}C interface supports both standard mode (up to 100 kbits), and fast mode (up to 400 kbits).

Both SDA and SCL are bi-directional lines, connecting to the positive supply voltage via a current source or pull-up resistor. When the bus is free, both lines are HIGH. The SDA and SCL pins are open drain.

8.3.6.1 Data Validity

The data on the SDA line must be stable during the HIGH period of the clock. The HIGH or LOW state of the data line can only change when the clock signal on the SCL line is LOW. One clock pulse is generated for each data bit transferred.

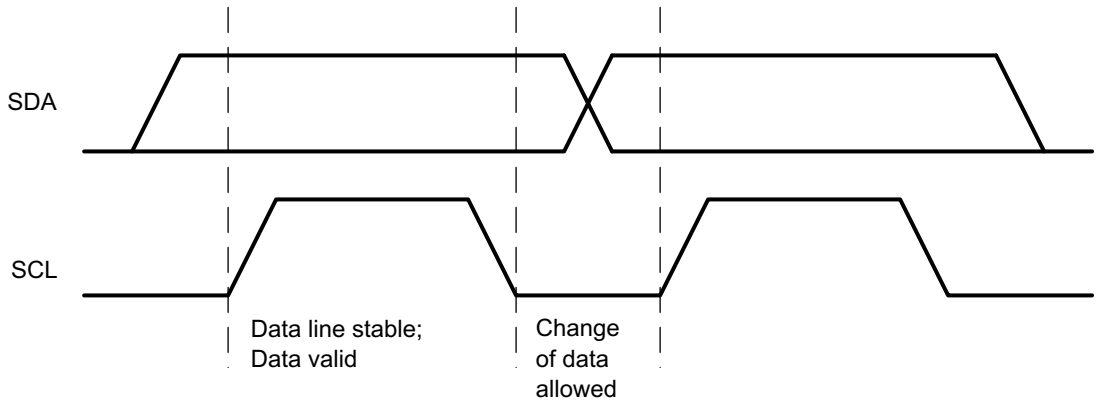

Figure 16. Bit Transfer on the I^{2}C Bus

8.3.6.2 START and STOP Conditions

All transactions begin with a START (S) and can be terminated by a STOP (P). A HIGH to LOW transition on the SDA line while SCl is HIGH defines a START condition. A LOW to HIGH transition on the SDA line when the SCL is HIGH defines a STOP condition.

START and STOP conditions are always generated by the master. The bus is considered busy after the START condition, and free after the STOP condition.

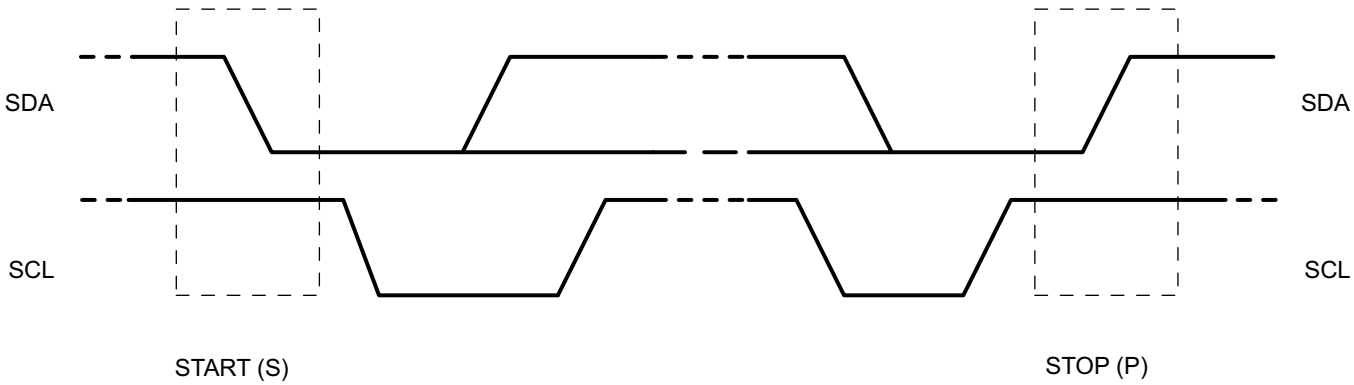

Figure 17. START and STOP conditions

8.3.6.3 Byte Format

Every byte on the SDA line must be 8 bits long. The number of bytes to be transmitted per transfer is unrestricted. Each byte has to be followed by an Acknowledge bit. Data is transferred with the Most Significant Bit (MSB) first. If a slave cannot receive or transmit another complete byte of data until it has performed some other function, it can hold the clock line SCL low to force the master into a wait state (clock stretching). Data transfer then continues when the slave is ready for another byte of data and release the clock line SCL.

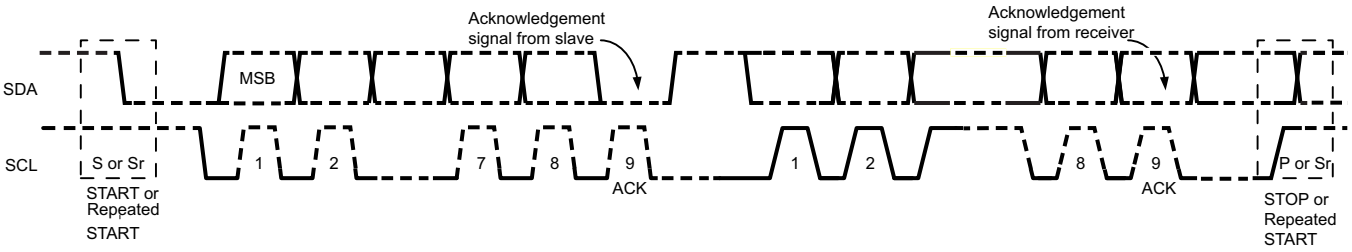

Figure 18. Data Transfer on the I²C Bus

8.3.6.4 Acknowledge (ACK) and Not Acknowledge (NACK)

The acknowledge takes place after every byte. The acknowledge bit allows the receiver to signal the transmitter that the byte was successfully received and another byte may be sent. All clock pulses, including the acknowledge 9th clock pulse, are generated by the master.

The transmitter releases the SDA line during the acknowledge clock pulse so the receiver can pull the SDA line LOW and it remains stable LOW during the HIGH period of this clock pulse.

When SDA remains HIGH during the 9th clock pulse, this is the Not Acknowledge signal. The master can then generate either a STOP to abort the transfer or a repeated START to start a new transfer.

8.3.6.5 Slave Address and Data Direction Bit

After the START, a slave address is sent. This address is 7 bits long followed by the eighth bit as a data direction bit (bit R/W). A zero indicates a transmission (WRITE) and a one indicates a request for data (READ).

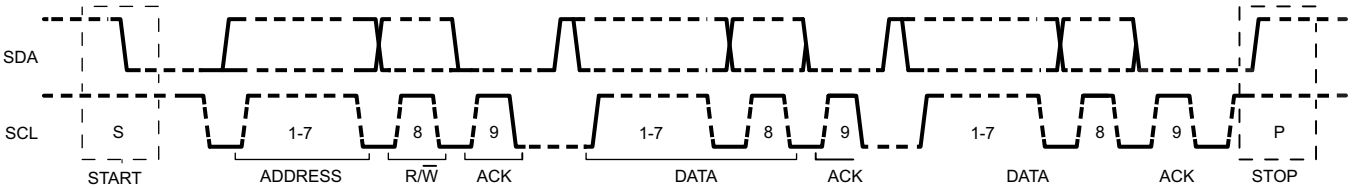

Figure 19. Complete Data Transfer

8.3.6.5.1 Single Read and Write

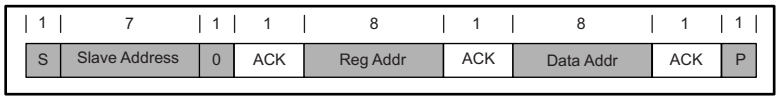

Figure 20. Single Write

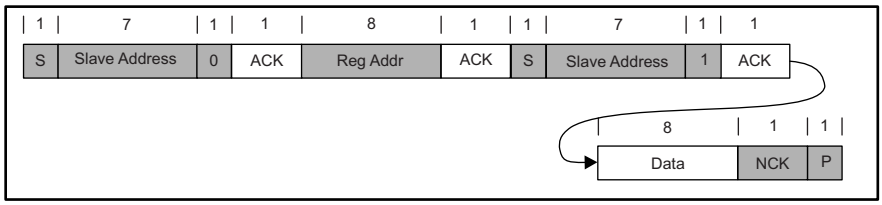

Figure 21. Single Read

Copyright © 2012–2014, Texas Instruments Incorporated

If the register address is not defined, the charger IC send back NACK and go back to the idle state.

8.3.6.5.2 Multi-Read and Multi-Write

The charger device supports multi-read and multi-write on REG00 through REG08.

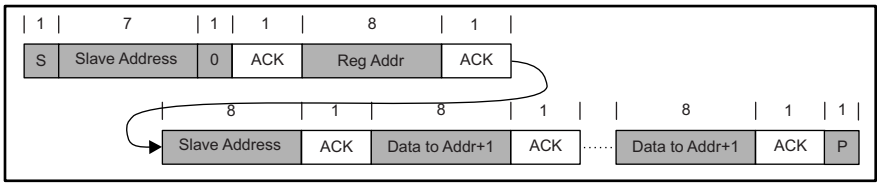

Figure 22. Multi-Write

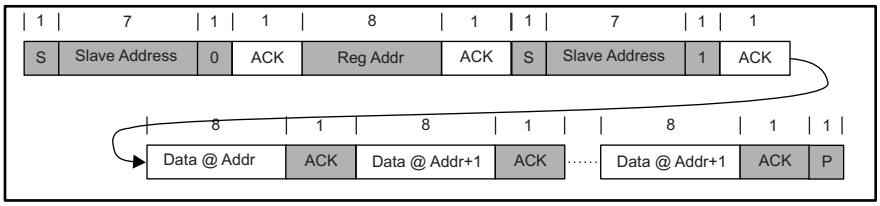

Figure 23. Multi-Read

The fault register REG09 locks the previous fault and only clears it after the register is read. For example, if Charge Safety Timer Expiration fault occurs but recovers later, the fault register REG09 reports the fault when it is read the first time, but returns to normal when it is read the second time. To verify real time fault, the fault register REG09 should be read twice to get the real condition. In addition, the fault register REG09 does not support multi-read or multi-write.

8.4 Device Functional Modes

8.4.1 Host Mode and Default Mode

The bq24196 is a host controlled device, but it can operate in default mode without host management. In default mode, bq24196 can be used as an autonomous charger with no host or with host in sleep.

When the charger is in default mode, REG09[7] is HIGH. When the charger is in host mode, REG09[7] is LOW. After power-on-reset, the device starts in watchdog timer expiration state, or default mode. All the registers are in the default settings.

Any write command to bq24196 transitions the device from default mode to host mode. All the device parameters can be programmed by the host. To keep the device in host mode, the host has to reset the watchdog timer by writing 1 twice to REG01[6] before the watchdog timer expires (REG05[5:4]), or disable watchdog timer by setting REG05[5:4] = 00.

Device Functional Modes (continued)

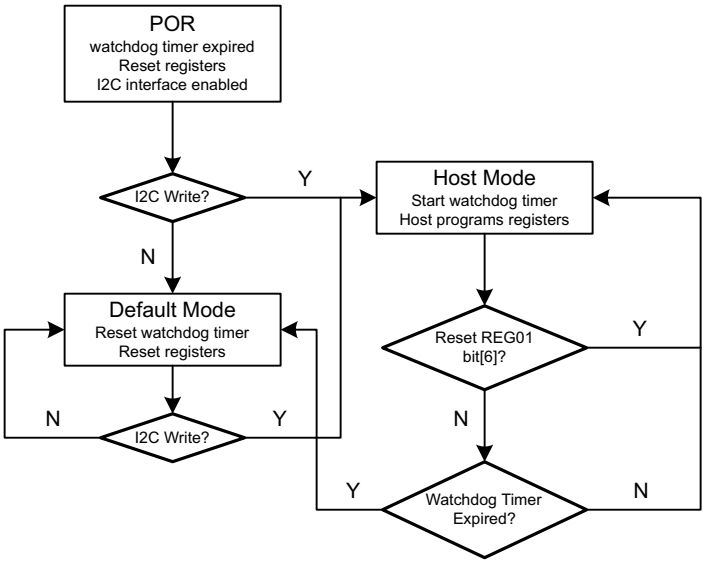

Figure 24. Watchdog Timer Flow Chart

8.4.1.1 Plug in USB100mA Source with Good Battery

When the input source is detected as 100-mA USB host, and the battery voltage is above batgood threshold (V_{BATGD}), the charger device enters HIZ state to meet the battery charging spec requirement.

If the charger device is in host mode, it will stay in HIZ state even after the USB100-mA source is removed, and the adapter plugs in. During the HIZ state, REG00[7] is set HIGH and the system load is supplied from battery. It is recommended that the processor host always checks if the charger IC is in HIZ state when it wakes up. The host can write REG00[7] to 0 to exit HIZ state.

If the charger is in default mode, when the DC source is removed, the charger device will get out of HIZ state automatically. When the input source plugs in again, the charger IC runs detection on the input source and update the input current limit.

8.4.1.2 USB Timer when Charging from USB 100-mA Source

The total charging time in default mode from USB 100-mA source is limited by a 45-min max timer. At the end of the timer, the device stops the converter and goes to HIZ.

8.5 Register Map

Table 6. Register Map

REGISTER	REGISTER NAME	RESET
REG00	Input Source Control Register	00110000, or 30
REG01	Power-On Configuration Register	00011011, or 1B
REG02	Charge Current Control Register	01100000, or 60
REG03	Pre-Charge/Termination Current Control Register	00010001, or 11
REG04	Charge Voltage Control Register	11001010, or CA
REG05	Charge Termination/Timer Control Register	10011010, or 9A
REG06	Thermal Regulation Control Register	00000011, or 03
REG07	Misc Operation Control Register	01001011, or 4B
REG08	System Status Register	—
REG09	Fault Register	—
REG0A	Vender / Part / Revision Status Register	—

Copyright © 2012–2014, Texas Instruments Incorporated

8.5.1 I²C Registers

Address: 6BH. REG00-07 support Read and Write. REG08-0A are read only.

8.5.1.1 Input Source Control Register REG00 (reset = 00110000, or 30)

Figure 25. REG00 Input Source Control Register Format

7	6	5	4	3	2	1	0
EN_HIZ	VINDPM[3]	VINDPM[2]	VINDPM[1]	VINDPM[0]	IINLIM[2]	IINLIM[1]	IINLIM[0]
R/W	R/W	R/W	R/W	R/W	R/W	R/W	R/W

LEGEND: R/W = Read/Write; R = Read only; -n = value after reset

Table 7. REG00 Input Source Control Register Description

BIT	FIELD	TYPE	RESET	DESCRIPTION	
Bit 7	EN_HIZ	R/W	0	0 – Disable, 1 – Enable	Default: Disable (0)
Input Voltage Limit					
Bit 6	VINDPM[3]	R/W	0	640 mV	Offset 3.88 V, Range: 3.88 V to 5.08 V Default: 4.36 V (0110)
Bit 5	VINDPM[2]	R/W	1	320 mV	
Bit 4	VINDPM[1]	R/W	1	160 mV	
Bit 3	VINDPM[0]	R/W	0	80 mV	
Input Current Limit (Actual input current limit is the lower of I²C and ILIM)					
Bit 2	IINLIM[2]	R/W	0	000 – 100 mA, 001 – 150 mA, 010 – 500 mA, 011 – 900 mA, 100 – 1.2 A, 101 – 1.5 A, 110 – 2 A, 111 – 3 A	Default SDP: 100 mA (000)(OTG pin = 0) or 500 mA (010) (OTG pin = 1) Default DCP/CDP: 3 A (111)
Bit 1	IINLIM[1]	R/W	0		
Bit 0	IINLIM[0]	R/W	0		

8.5.1.2 Power-On Configuration Register REG01 (reset = 00011011, or 1B)

Figure 26. REG01 Power-On Configuration Register Format

7	6	5	4	3	2	1	0
Register Reset	I^2C Watchdog Timer Reset	CHG_CONFIG[1]	CHG_CONFIG[0]	SYS_MIN[2]	SYS_MIN[1]	SYS_MIN[0]	BOOST_LIM
R/W	R/W	R/W	R/W	R/W	R/W	R/W	R/W

LEGEND: R/W = Read/Write; R = Read only; -n = value after reset

Table 8. REG01 Power-On Configuration Register Description

BIT	FIELD	TYPE	RESET	DESCRIPTION	NOTE
Bit 7	Register Reset	R/W	0	0 – Keep current register setting, 1 – Reset to default	Default: Keep current register setting (0) Back to 0 after register reset
Bit 6	I^2C Watchdog Timer Reset	R/W	0	0 – Normal ; 1 – Reset	Default: Normal (0) Back to 0 after timer reset
Charger Configuration					
Bit 5	CHG_CONFIG[1]	R/W	0	00 – Charge Disable, 01 – Charge Battery, 10/11 – OTG	Default: Charge Battery (01)
Bit 4	CHG_CONFIG[0]	R/W	1		
Minimum System Voltage Limit					
Bit 3	SYS_MIN[2]	R/W	1	0.4 V	Offset: 3.0 V, Range 3.0 V to 3.7 V Default: 3.5 V (101)
Bit 2	SYS_MIN[1]	R/W	0	0.2 V	
Bit 1	SYS_MIN[0]	R/W	1	0.1 V	
Boost Mode Current Limit					
Bit 0	BOOST_LIM	R/W	1	0 – 500 mA, 1 – 1.3 A	Default: 1.3 A (1)

Copyright © 2012–2014, Texas Instruments Incorporated

8.5.1.3 Charge Current Control Register REG02 (reset = 01100000, or 60)

Figure 27. REG02 Charge Current Control Register Format

7	6	5	4	3	2	1	0
ICHG[5]	ICHG[4]	ICHG[3]	ICHG[2]	ICHG[1]	ICHG[0]	Reserved	FORCE_20PCT
R/W	R/W	R/W	R/W	R/W	R/W	R/W	R/W

LEGEND: R/W = Read/Write; R = Read only; -n = value after reset

Table 9. REG02 Charge Current Control Register Description

BIT	FIELD	TYPE	RESET	DESCRIPTION	NOTE
Fast Charge Current Limit					
Bit 7	ICHG[5]	R/W	0	2048 mA	Offset: 512 mA Range: 512 to 2496 mA Default: 2048 mA (011000)
Bit 6	ICHG[4]	R/W	1	1024 mA	
Bit 5	ICHG[3]	R/W	1	512 mA	
Bit 4	ICHG[2]	R/W	0	256 mA	
Bit 3	ICHG[1]	R/W	0	128 mA	
Bit 2	ICHG[0]	R/W	0	64 mA	
Bit 1	Reserved	R/W	0	0 - Reserved	Reserved. Must write "0"
Bit 0	FORCE_20PCT	R/W	0	0 - ICHG as REG02[7:2] (Fast Charge Current Limit) and REG03[7:4] (Pre-Charge Current Limit) programmed 1 - ICHG as 20% of REG02[7:2] (Fast Charge Current Limit) and 50% of REG03[7:4] (Pre-Charge Current Limit) programmed	Default: ICHG as REG02[7:2] (Fast Charge Current Limit) and REG03[7:4] (Pre-Charge Current Limit) programmed (0)

8.5.1.4 Pre-Charge/Termination Current Control Register REG03 (reset = 00010001, or 11)

Figure 28. REG03 Pre-Charge/Termination Current Control Register Format

7	6	5	4	3	2	1	0
IPRECHG[3]	IPRECHG[2]	IPRECHG[1]	IPRECHG[0]	ITERM[3]	ITERM[2]	ITERM[1]	ITERM[0]
R/W	R/W	R/W	R/W	R/W	R/W	R/W	R/W

LEGEND: R/W = Read/Write; R = Read only; -n = value after reset

Table 10. REG03 Pre-Charge/Termination Current Control Register Description

BIT	FIELD	TYPE	RESET	DESCRIPTION	NOTE
Pre-Charge Current Limit					
Bit 7	IPRECHG[3]	R/W	0	1024 mA	Offset: 128 mA, Range: 128 mA to 2048 mA Default: 256 mA (0001)
Bit 6	IPRECHG[2]	R/W	0	512 mA	
Bit 5	IPRECHG[1]	R/W	0	256 mA	
Bit 4	IPRECHG[0]	R/W	1	128 mA	
Termination Current Limit					
Bit 3	ITERM[3]	R/W	0	1024 mA	Offset: 128 mA Range: 128 mA to 2048 mA Default: 256 mA (0001)
Bit 2	ITERM[2]	R/W	0	512 mA	
Bit 1	ITERM[1]	R/W	0	256 mA	
Bit 0	ITERM[0]	R/W	1	128 mA	

Copyright © 2012–2014, Texas Instruments Incorporated

8.5.1.5 Charge Voltage Control Register REG04 (reset = 11001010, or CA)

Figure 29. REG04 Charge Voltage Control Register Format

7	6	5	4	3	2	1	0
VREG[5]	VREG[4]	VREG[3]	VREG[2]	VREG[1]	VREG[0]	BATLOWV	VRECHG
R/W	R/W	R/W	R/W	R/W	R/W	R/W	R/W

LEGEND: R/W = Read/Write; R = Read only; -n = value after reset

Table 11. REG04 Charge Voltage Control Register Description

BIT	FIELD	TYPE	RESET	DESCRIPTION	NOTE
Charge Voltage Limit					
Bit 7	VREG[5]	R/W	1	512 mV	Offset: 3.504 V Range: 3.504 V to 4.400 V (111000) Default: 4.208 V (101100) Default: 4.304 V (110010)
Bit 6	VREG[4]	R/W	1	256 mV	
Bit 5	VREG[3]	R/W	0	128 mV	
Bit 4	VREG[2]	R/W	0	64 mV	
Bit 3	VREG[1]	R/W	1	32 mV	
Bit 2	VREG[0]	R/W	0	16 mV	
Battery Precharge to Fast Charge Threshold					
Bit 1	BATLOWV	R/W	1	0 – 2.8 V, 1 – 3.0 V	Default: 3.0 V (1)
Battery Recharge Threshold (below battery regulation voltage)					
Bit 0	VRECHG	R/W	0	0 – 100 mV, 1 – 300 mV	Default: 100 mV (0)

8.5.1.6 Charge Termination/Timer Control Register REG05 (reset = 10011010, or 9A)

Figure 30. REG05 Charge Termination/Timer Control Register Format

7	6	5	4	3	2	1	0
EN_TERM	TERM_STAT	WATCHDOG[1]	WATCHDOG[0]	EN_TIMER	CHG_TIMER[1]	CHG_TIMER[0]	Reserved
R/W	R/W	R/W	R/W	R/W	R/W	R/W	R/W

LEGEND: R/W = Read/Write; R = Read only; -n = value after reset

Table 12. REG05 Charge Termination/Timer Control Register Description

BIT	FIELD	TYPE	RESET	DESCRIPTION	NOTE
Charging Termination Enable					
Bit 7	EN_TERM	R/W	1	0 – Disable, 1 – Enable	Default: Enable termination (1)
Termination Indicator Threshold					
Bit 6	TERM_STAT	R/W	0	0 – Match ITERM, 1 – STAT pin high before actual termination when charge current below 800 mA	Default Match ITERM (0)
I2C Watchdog Timer Setting					
Bit 5	WATCHDOG[1]	R/W	0	00 – Disable timer, 01 – 40 s, 10 – 80 s, 11 – 160 s	Default: 40 s (01)
Bit 4	WATCHDOG[0]	R/W	1		
Charging Safety Timer Enable					
Bit 3	EN_TIMER	R/W	1	0 – Disable, 1 – Enable	Default: Enable (1)
Fast Charge Timer Setting					
Bit 2	CHG_TIMER[1]	R/W	0	00 – 5 hrs, 01 – 8 hrs, 10 – 12 hrs, 11 – 20 hrs	Default: 8 hours (01) (See Charging Safety Timer for details)
Bit 1	CHG_TIMER[0]	R/W	1		
Bit 0	Reserved	R/W	0	0 - Reserved	Reserved. Must write "0"

Copyright © 2012–2014, Texas Instruments Incorporated

8.5.1.7 Thermal Regulation Control Register REG06 (reset = 00000011, or 03)

Figure 31. REG06 Thermal Regulation Control Register Format

7	6	5	4	3	2	1	0
Reserved	Reserved	Reserved	Reserved	Reserved	Reserved	TREG[1]	TREG[0]
R/W	R/W	R/W	R/W	R/W	R/W	R/W	R/W

LEGEND: R/W = Read/Write; R = Read only; -n = value after reset

Table 13. REG06 Thermal Regulation Control Register Description

BIT	FIELD	TYPE	RESET	DESCRIPTION	NOTE
Bit 7	Reserved	R/W	0	0 - Reserved	Reserved. Must write "0"
Bit 6	Reserved	R/W	0	0 - Reserved	Reserved. Must write "0"
Bit 5	Reserved	R/W	0	0 - Reserved	Reserved. Must write "0"
Bit 4	Reserved	R/W	0	0 - Reserved	Reserved. Must write "0"
Bit 3	Reserved	R/W	0	0 - Reserved	Reserved. Must write "0"
Bit 2	Reserved	R/W	0	0 - Reserved	Reserved. Must write "0"
Thermal Regulation Threshold					
Bit 1	TREG[1]	R/W	1	00 – 60°C, 01 – 80°C, 10 – 100°C, 11 – 120°C	Default: 120°C (11)
Bit 0	TREG[0]	R/W	1		

8.5.1.8 Misc Operation Control Register REG07 (reset = 01001011, or 4B)

Figure 32. REG07 Misc Operation Control Register Format

7	6	5	4	3	2	1	0
DPDM_EN	TMR2X_EN	BATFET_Disable	Reserved	Reserved	Reserved	INT_MASK[1]	INT_MASK[0]
R/W	R/W	R/W	R/W	R/W	R/W	R/W	R/W

LEGEND: R/W = Read/Write; R = Read only; -n = value after reset

Table 14. REG07 Misc Operation Control Register Description

BIT	FIELD	TYPE	RESET	DESCRIPTION	NOTE
Set default input current limit from PSEL/OTG pins					
Bit 7	DPDM_EN	R/W	0	0 – Not in D+/D– detection; 1 – Force D+/D– detection	Default: Not in D+/D– detection (0), Back to 0 after detection complete
Safety Timer Setting during Input DPM and Thermal Regulation					
Bit 6	TMR2X_EN	R/W	1	0 – Safety timer not slowed by 2X during input DPM or thermal regulation, 1 – Safety timer slowed by 2X during input DPM or thermal regulation	Default: Safety timer slowed by 2X (1)
Force BATFET Off					
Bit 5	BATFET_Disable	R/W	0	0 – Allow Q4 turn on, 1 – Turn off Q4	Default: Allow Q4 turn on(0)
Bit 4	Reserved	R/W	0	0 – Reserved	
Bit 3	Reserved	R/W	1	1 – Reserved	
Bit 2	Reserved	R/W	0	0 – Reserved	
Bit 1	INT_MASK[1]	R/W	1	0 – No INT during CHRG_FAULT, 1 – INT on CHRG_FAULT	Default: INT on CHRG_FAULT (1)
Bit 0	INT_MASK[0]	R/W	1	0 – No INT during BAT_FAULT, 1 – INT on BAT_FAULT	Default: INT on BAT_FAULT (1)

Copyright © 2012–2014, Texas Instruments Incorporated

8.5.1.9 System Status Register REG08

Figure 33. REG08 System Status Register Format

7	6	5	4	3	2	1	0
VBUS_STAT[1]	VBUS_STAT[0]	CHRG_STAT[1]	CHRG_STAT[0]	DPM_STAT	PG_STAT	THERM_STAT	VSYS_STAT
R	R	R	R	R	R	R	R

LEGEND: R = Read only; -n = value after reset

Table 15. REG08 System Status Register Description

BIT	FIELD	TYPE	DESCRIPTION
Bit 7	VBUS_STAT[1]	R	00 – Unknown (no input, or DPDM detection incomplete), 01 – USB host, 10 – Adapter port, 11 – OTG
Bit 6	VBUS_STAT[0]	R	
Bit 5	CHRG_STAT[1]	R	00 – Not Charging, 01 – Pre-charge (<$V_{BATLOWV}$), 10 – Fast Charging, 11 – Charge Termination Done
Bit 4	CHRG_STAT[0]	R	
Bit 3	DPM_STAT	R	0 – Not DPM, 1 – VINDPM or IINDPM
Bit 2	PG_STAT	R	0 – Not Power Good, 1 – Power Good
Bit 1	THERM_STAT	R	0 – Normal, 1 – In Thermal Regulation
Bit 0	VSYS_STAT	R	0 – Not in VSYSMIN regulation (BAT > VSYSMIN), 1 – In VSYSMIN regulation (BAT < VSYSMIN)

8.5.1.10 Fault Register REG09

Figure 34. REG09 Fault Register Format

7	6	5	4	3	2	1	0
WATCHDOG_ FAULT	BOOST_ FAULT	CHRG_FAULT[1]	CHRG_FAULT[0]	BAT_FAULT	NTC_FAULT[2]	NTC_FAULT[1]	NTC_FAULT[0]
R	R	R	R	R	R	R	R

LEGEND: R = Read only; -n = value after reset

Table 16. REG09 Fault Register Description

BIT	FIELD	TYPE	DESCRIPTION
Bit 7	WATCHDOG_FAULT	R	0 – Normal, 1- Watchdog timer expiration
Bit 6	BOOST_FAULT	R	0 – Normal, 1 – VBUS overloaded (OCP), or VBUS OVP in boost mode
Bit 5	CHRG_FAULT[1]	R	00 – Normal, 01 – Input fault (VBUS OVP or VBAT < VBUS < 3.8 V), 10 - Thermal shutdown, 11 – Charge Safety Timer Expiration
Bit 4	CHRG_FAULT[0]	R	
Bit 3	BAT_FAULT	R	0 – Normal, 1 – BATOVP
Bit 2	NTC_FAULT[2]	R	000 – Normal, 101 – Cold, 110 – Hot
Bit 1	NTC_FAULT[1]	R	
Bit 0	NTC_FAULT[0]	R	

Copyright © 2012–2014, Texas Instruments Incorporated

8.5.1.11 Vender / Part / Revision Status Register REG0A (reset = 00101011, or 2B)

Figure 35. REG0A Vender / Part / Revision Status Register Format

7	6	5	4	3	2	1	0
Reserved	Reserved	PN[2]	PN[1]	PN[0]	TS_PROFILE	DEV_REG[0]	DEV_REG[1]
R	R	R	R	R	R	R	R

LEGEND: R = Read only; -n = value after reset

Table 17. REG0A Vender / Part / Revision Status Register Description

BIT	FIELD	TYPE	RESET	DESCRIPTION
Bit 7	Reserved	R	0	0 - Reserved
Bit 6	Reserved	R	0	0 - Reserved
Device Configuration				
Bit 5	PN[2]	R	1	101
Bit 4	PN[1]	R	0	
Bit 3	PN[0]	R	1	
Bit 2	TS_PROFILE	R	0	0 - Cold/Hot window
Bit 1	DEV_REG[0]	R	1	11
Bit 0	DEV_REG[1]	R	1	

9 Application and Implementation

NOTE

Information in the following applications sections is not part of the TI component specification, and TI does not warrant its accuracy or completeness. TI's customers are responsible for determining suitability of components for their purposes. Customers should validate and test their design implementation to confirm system functionality.

9.1 Application Information

A typical application consists of the device configured as an I^{2}C controlled power path management device and a single cell Li-Ion battery charger for single cell Li-Ion and Li-polymer batteries used in a wide range of tablets and other portable devices. It integrates an input reverse-blocking FET (RBFET, Q1), high-side switching FET (HSFET, Q2), low-side switching FET (LSFET, Q3), and BATFET (Q4) between the system and battery. The device also integrates a bootstrap diode for the high-side gate drive.

9.2 Typical Application

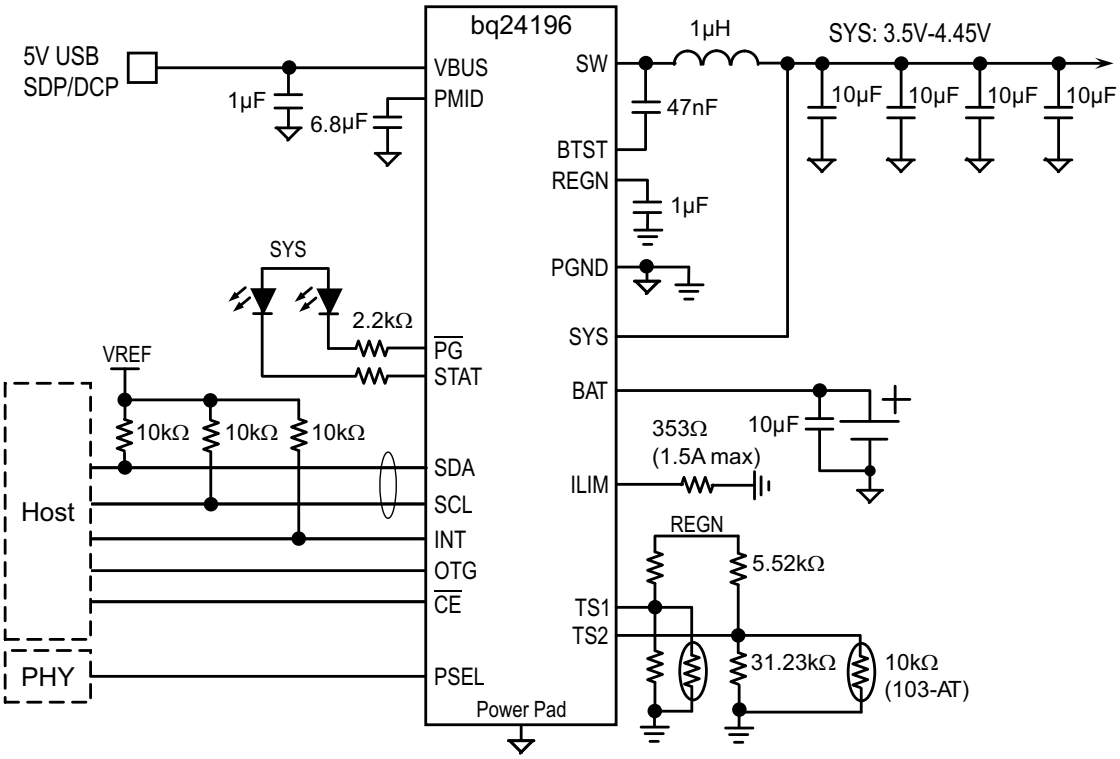

Figure 36. bq24196 with PSEL from PHY, Charging from SDP/DCP, and Two Thermistor Connections

Copyright © 2012–2014, Texas Instruments Incorporated

Typical Application (continued)

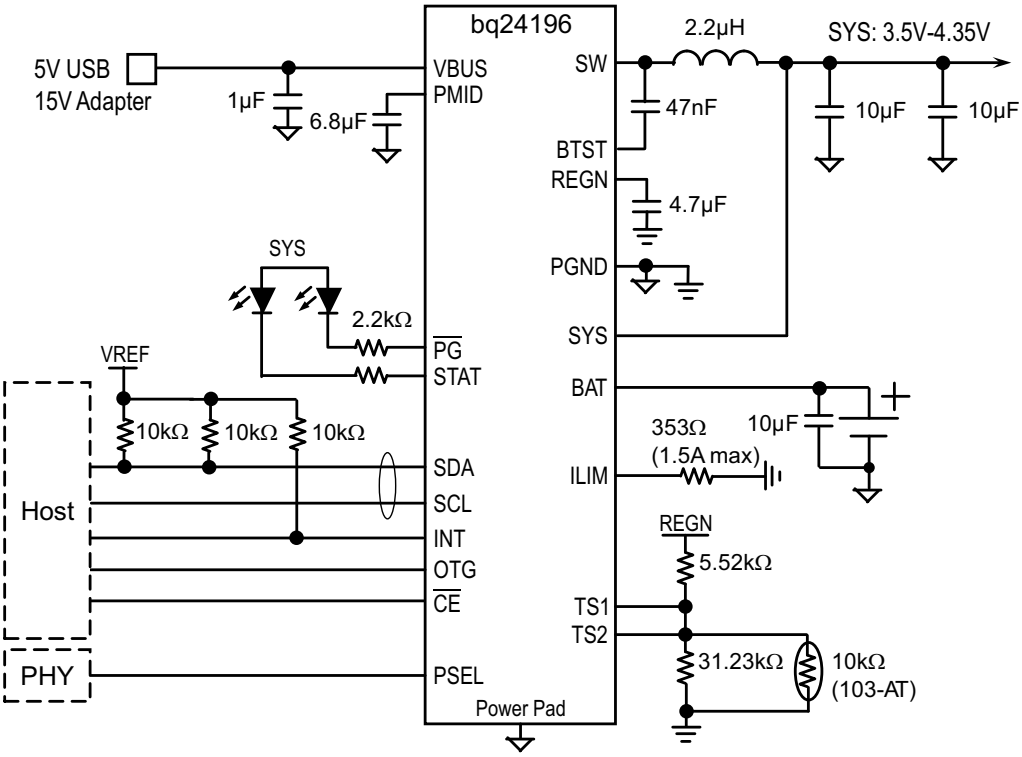

Figure 37. bq24196 with PSEL, USB On-The-Go (OTG), and Single Thermistor Connection

9.2.1 Design Requirements

Table 18. Design Requirements

DESIGN PARAMETER	EXAMPLE VALUE
Input voltage	3.9 V to 17 V
Input current limit	3000 mA
Fast charge current	2500 mA
Boost mode output current	1.3 A

9.2.2 Detailed Design Procedure

9.2.2.1 Inductor Selection

The bq24196 has 1.5-MHz switching frequency to allow the use of small inductor and capacitor values. The Inductor saturation current should be higher than the charging current (I_{CHG}) plus half the ripple current (I_{RIPPLE}):

$$I_{SAT} \geq I_{CHG} + (1/2)\, I_{RIPPLE} \tag{4}$$

The inductor ripple current depends on input voltage (VBUS), duty cycle ($D = V_{BAT}/V_{VBUS}$), switching frequency (fs) and inductance (L):

$$I_{RIPPLE} = \frac{V_{IN} \times D \times (1 - D)}{fs \times L} \tag{5}$$

The maximum inductor ripple current happens with D = 0.5 or close to 0.5. Usually inductor ripple is designed in the range of (20 to 40%) maximum charging current as a trade-off between inductor size and efficiency for a practical design. Typical inductor value is 2.2 µH.

9.2.2.2 Input Capacitor

Input capacitor should have enough ripple current rating to absorb input switching ripple current. The worst case RMS ripple current is half of the charging current when duty cycle is 0.5. If the converter does not operate at 50% duty cycle, then the worst case capacitor RMS current I_{CIN} occurs where the duty cycle is closest to 50% and can be estimated by the following equation:

$$I_{CIN} = I_{CHG} \times \sqrt{D \times (1 - D)} \tag{6}$$

For best performance, VBUS should be decouple to PGND with 1-µF capacitance. The remaining input capacitor should be place on PMID.

Low ESR ceramic capacitor such as X7R or X5R is preferred for input decoupling capacitor and should be placed to the drain of the high side MOSFET and source of the low side MOSFET as close as possible. Voltage rating of the capacitor must be higher than normal input voltage level. 25-V rating or higher capacitor is preferred for 15-V input voltage.

9.2.2.3 Output Capacitor

Output capacitor also should have enough ripple current rating to absorb output switching ripple current. The output capacitor RMS current I_{COUT} is given:

$$I_{COUT} = \frac{I_{RIPPLE}}{2 \times \sqrt{3}} \approx 0.29 \times I_{RIPPLE} \tag{7}$$

The output capacitor voltage ripple can be calculated as follows:

$$\Delta V_O = \frac{V_{OUT}}{8LCfs^2}\left(1 - \frac{V_{OUT}}{V_{IN}}\right) \tag{8}$$

At certain input/output voltage and switching frequency, the voltage ripple can be reduced by increasing the output filter LC.

The charger device has internal loop compensator. To get good loop stability, the resonant frequency of the output inductor and output capacitor should be designed between 15 kHz and 25 kHz. With 2.2-µH inductor, the typical output capacitor value is 20 µF. The preferred ceramic capacitor is 6 V or higher rating, X7R or X5R.

Copyright © 2012–2014, Texas Instruments Incorporated

9.2.3 Application Performance Plots

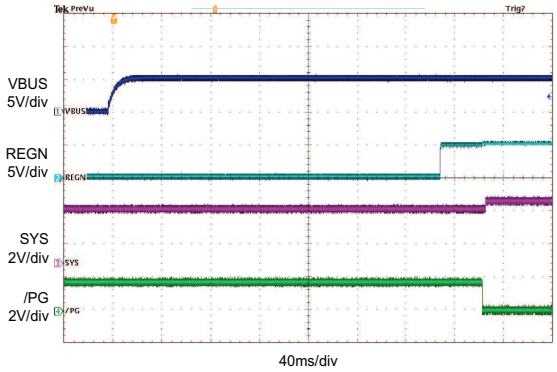

VBAT 3.2 V

Figure 38. Power Up with Charge Disabled

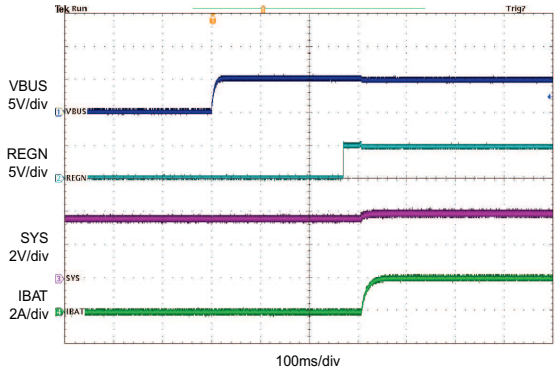

Figure 39. Power Up with Charge Enabled

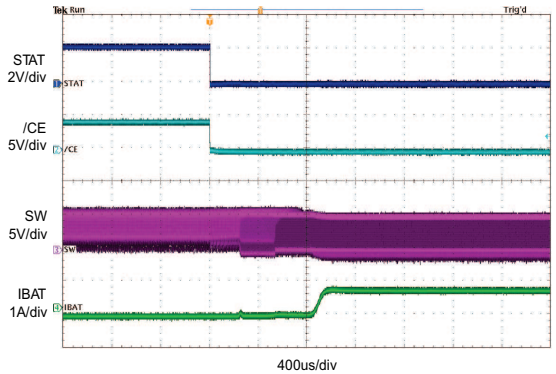

VBUS 5 V

Figure 40. Charge Enable

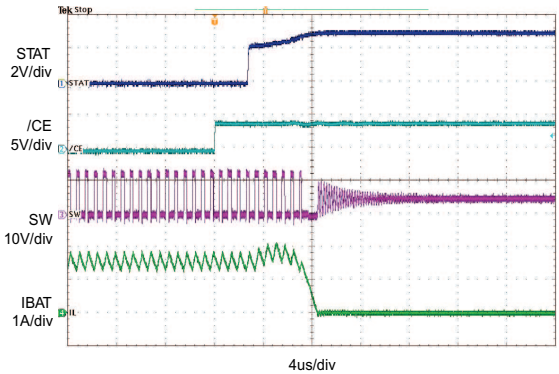

VBUS 12 V

Figure 41. Charge Disable

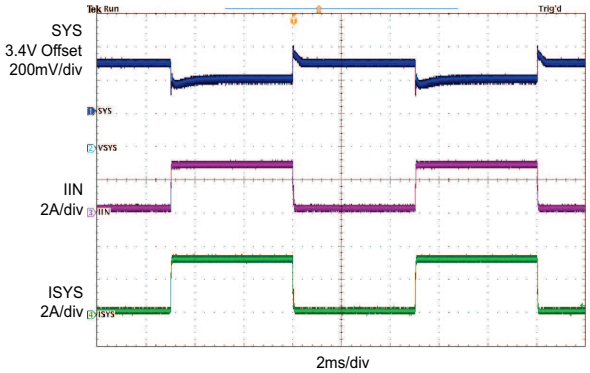

VBUS 5 V, IIN 3 A, Charge Disable

Figure 42. Input Current DPM Response without Battery

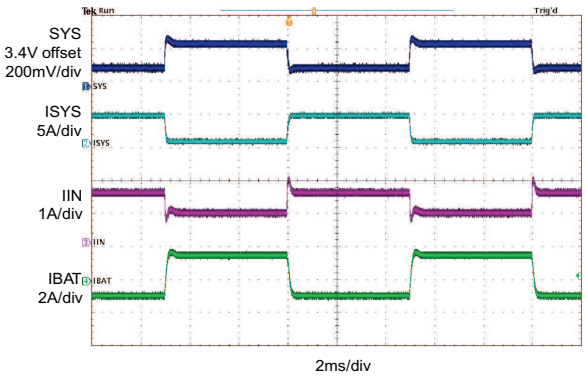

VBUS 9 V, IIN 1.5 A, VBAT 3.8 V

Figure 43. Load Transient During Supplement Mode

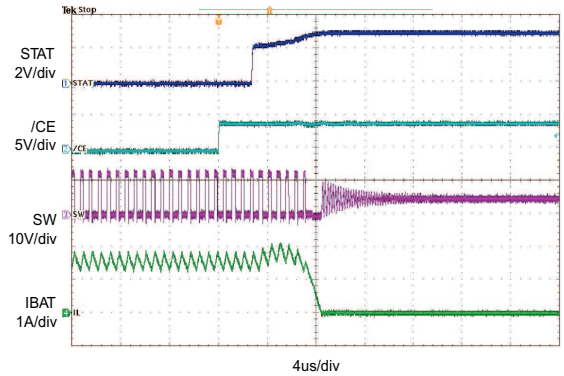

VBUS 12 V, VBAT 3.8 V, ICHG 1.5 A

Figure 44. PWM Switching Waveform

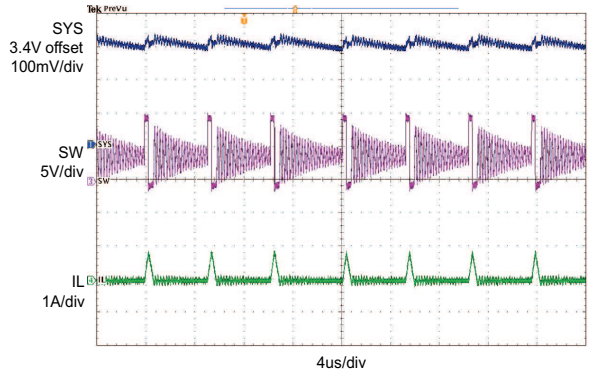

VBUS 9 V, No Battery, ISYS 10 mA, Charge Disable

Figure 45. PFM Switching Waveform

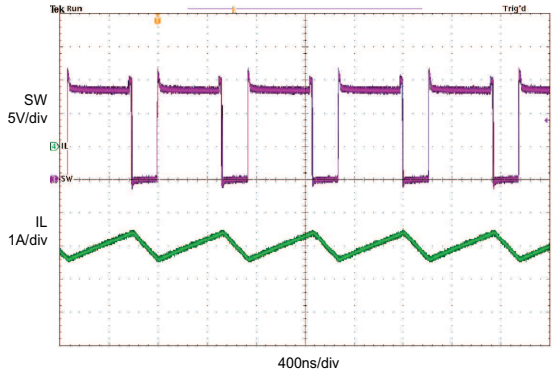

VBAT 3.8 V, ILOAD 1 A

Figure 46. Boost Mode Switching Waveform

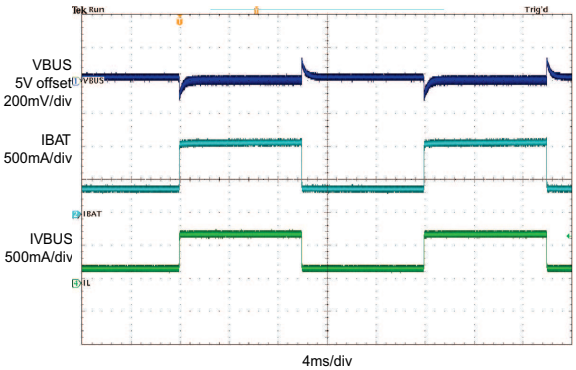

VBAT 3.8 V

Figure 47. Boost Mode Load Transient

Copyright © 2012–2014, Texas Instruments Incorporated

10 Power Supply Recommendations

In order to provide an output voltage on SYS, the bq2419x require a power supply between 3.9 V and 17 V input with at least 100 mA current rating connected to VBUS; or, a single-cell Li-Ion battery with voltage > $V_{BATUVLO}$ connected to BAT. The source current rating needs to be at least 3 A in order for the buck converter of the charger to provide maximum output power to SYS.

11 Layout

11.1 Layout Guidelines

The switching node rise and fall times should be minimized for minimum switching loss. Proper layout of the components to minimize high frequency current path loop (see Figure 48) is important to prevent electrical and magnetic field radiation and high frequency resonant problems. Here is a PCB layout priority list for proper layout. Layout PCB according to this specific order is essential.

1. Place input capacitor as close as possible to PMID pin and GND pin connections and use shortest copper trace connection or GND plane.
2. Place inductor input terminal to SW pin as close as possible. Minimize the copper area of this trace to lower electrical and magnetic field radiation but make the trace wide enough to carry the charging current. Do not use multiple layers in parallel for this connection. Minimize parasitic capacitance from this area to any other trace or plane.
3. Put output capacitor near to the inductor and the IC. Ground connections need to be tied to the IC ground with a short copper trace connection or GND plane.
4. Route analog ground separately from power ground. Connect analog ground and connect power ground separately. Connect analog ground and power ground together using power pad as the single ground connection point. Or using a 0-Ω resistor to tie analog ground to power ground.
5. Use single ground connection to tie charger power ground to charger analog ground. Just beneath the IC. Use ground copper pour but avoid power pins to reduce inductive and capacitive noise coupling.
6. Decoupling capacitors should be placed next to the IC pins and make trace connection as short as possible.
7. It is critical that the exposed power pad on the backside of the IC package be soldered to the PCB ground. Ensure that there are sufficient thermal vias directly under the IC, connecting to the ground plane on the other layers.
8. The via size and number should be enough for a given current path.

See the EVM design for the recommended component placement with trace and via locations. For the VQFN information, refer to SCBA017 and SLUA271.

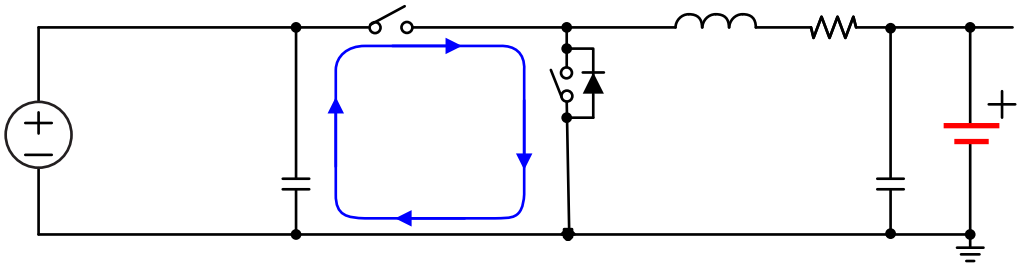

Figure 48. High Frequency Current Path

11.2 Layout Example

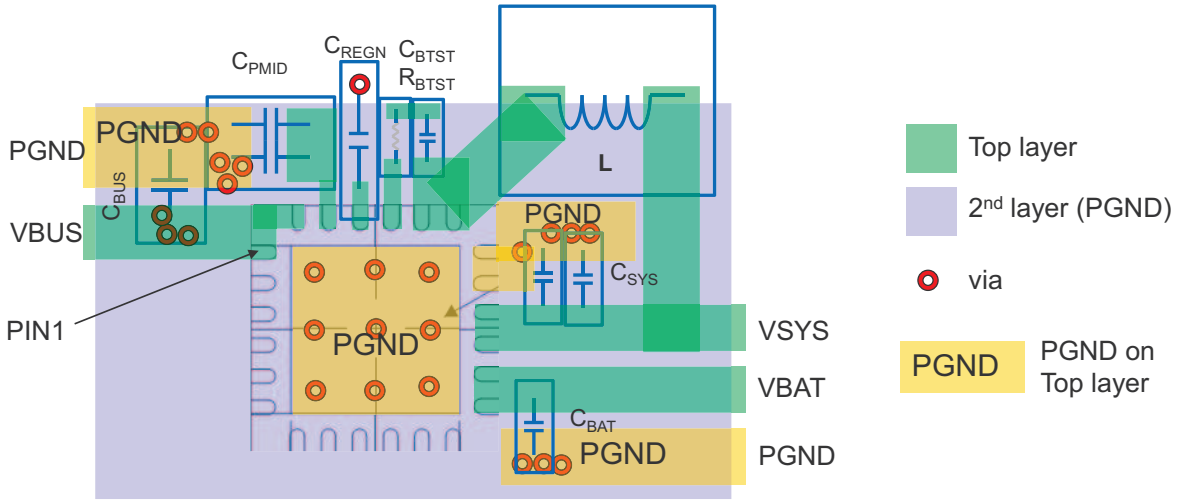

Figure 49. Layout Example Diagram

Copyright © 2012–2014, Texas Instruments Incorporated

12 Device and Documentation Support

12.1 Documentation Support

12.1.1 Related Documentation

bq24196 EVM (PWR021) User's Guide (SLUUA14)

Quad Flatpack No-Lead Logic Packages Application Report (SCBA017)

QFN/SON PCB Attachment Application Report (SLUA271)

12.2 Trademarks

All trademarks are the property of their respective owners.

12.3 Electrostatic Discharge Caution

These devices have limited built-in ESD protection. The leads should be shorted together or the device placed in conductive foam during storage or handling to prevent electrostatic damage to the MOS gates.

12.4 Glossary

SLYZ022 — *TI Glossary*.

This glossary lists and explains terms, acronyms, and definitions.

13 Mechanical, Packaging, and Orderable Information

The following pages include mechanical, packaging, and orderable information. This information is the most current data available for the designated devices. This data is subject to change without notice and revision of this document. For browser-based versions of this data sheet, refer to the left-hand navigation.

Copyright © 2012–2014, Texas Instruments Incorporated

PACKAGING INFORMATION

Orderable Device	Status (1)	Package Type	Package Drawing	Pins	Package Qty	Eco Plan (2)	Lead/Ball Finish (6)	MSL Peak Temp (3)	Op Temp (°C)	Device Marking (4/5)	Samples
BQ24196RGER	ACTIVE	VQFN	RGE	24	3000	Green (RoHS & no Sb/Br)	CU NIPDAU	Level-2-260C-1 YEAR	-40 to 85	BQ24196	Samples
BQ24196RGET	ACTIVE	VQFN	RGE	24	250	Green (RoHS & no Sb/Br)	CU NIPDAU	Level-2-260C-1 YEAR	-40 to 85	BQ24196	Samples

(1) The marketing status values are defined as follows:
ACTIVE: Product device recommended for new designs.
LIFEBUY: TI has announced that the device will be discontinued, and a lifetime-buy period is in effect.
NRND: Not recommended for new designs. Device is in production to support existing customers, but TI does not recommend using this part in a new design.
PREVIEW: Device has been announced but is not in production. Samples may or may not be available.
OBSOLETE: TI has discontinued the production of the device.

(2) Eco Plan - The planned eco-friendly classification: Pb-Free (RoHS), Pb-Free (RoHS Exempt), or Green (RoHS & no Sb/Br) - please check http://www.ti.com/productcontent for the latest availability information and additional product content details.
TBD: The Pb-Free/Green conversion plan has not been defined.
Pb-Free (RoHS): TI's terms "Lead-Free" or "Pb-Free" mean semiconductor products that are compatible with the current RoHS requirements for all 6 substances, including the requirement that lead not exceed 0.1% by weight in homogeneous materials. Where designed to be soldered at high temperatures, TI Pb-Free products are suitable for use in specified lead-free processes.
Pb-Free (RoHS Exempt): This component has a RoHS exemption for either 1) lead-based flip-chip solder bumps used between the die and package, or 2) lead-based die adhesive used between the die and leadframe. The component is otherwise considered Pb-Free (RoHS compatible) as defined above.
Green (RoHS & no Sb/Br): TI defines "Green" to mean Pb-Free (RoHS compatible), and free of Bromine (Br) and Antimony (Sb) based flame retardants (Br or Sb do not exceed 0.1% by weight in homogeneous material)

(3) MSL, Peak Temp. - The Moisture Sensitivity Level rating according to the JEDEC industry standard classifications, and peak solder temperature.

(4) There may be additional marking, which relates to the logo, the lot trace code information, or the environmental category on the device.

(5) Multiple Device Markings will be inside parentheses. Only one Device Marking contained in parentheses and separated by a "~" will appear on a device. If a line is indented then it is a continuation of the previous line and the two combined represent the entire Device Marking for that device.

(6) Lead/Ball Finish - Orderable Devices may have multiple material finish options. Finish options are separated by a vertical ruled line. Lead/Ball Finish values may wrap to two lines if the finish value exceeds the maximum column width.

Important Information and Disclaimer: The information provided on this page represents TI's knowledge and belief as of the date that it is provided. TI bases its knowledge and belief on information provided by third parties, and makes no representation or warranty as to the accuracy of such information. Efforts are underway to better integrate information from third parties. TI has taken and continues to take reasonable steps to provide representative and accurate information but may not have conducted destructive testing or chemical analysis on incoming materials and chemicals. TI and TI suppliers consider certain information to be proprietary, and thus CAS numbers and other limited information may not be available for release.

In no event shall TI's liability arising out of such information exceed the total purchase price of the TI part(s) at issue in this document sold by TI to Customer on an annual basis.

TAPE AND REEL INFORMATION

REEL DIMENSIONS

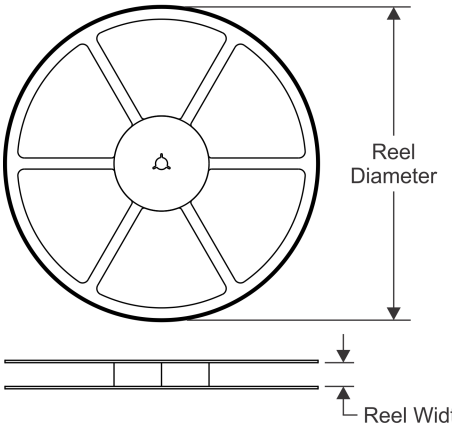

TAPE DIMENSIONS

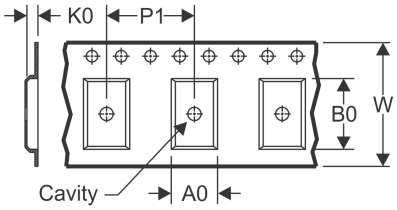

A0	Dimension designed to accommodate the component width
B0	Dimension designed to accommodate the component length
K0	Dimension designed to accommodate the component thickness
W	Overall width of the carrier tape
P1	Pitch between successive cavity centers

QUADRANT ASSIGNMENTS FOR PIN 1 ORIENTATION IN TAPE

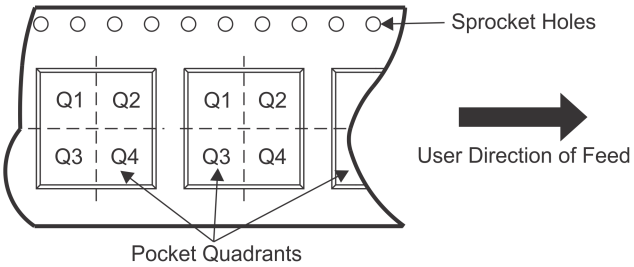

*All dimensions are nominal

Device	Package Type	Package Drawing	Pins	SPQ	Reel Diameter (mm)	Reel Width W1 (mm)	A0 (mm)	B0 (mm)	K0 (mm)	P1 (mm)	W (mm)	Pin1 Quadrant
BQ24196RGER	VQFN	RGE	24	3000	330.0	12.4	4.25	4.25	1.15	8.0	12.0	Q2
BQ24196RGET	VQFN	RGE	24	250	180.0	12.4	4.25	4.25	1.15	8.0	12.0	Q2

TAPE AND REEL BOX DIMENSIONS

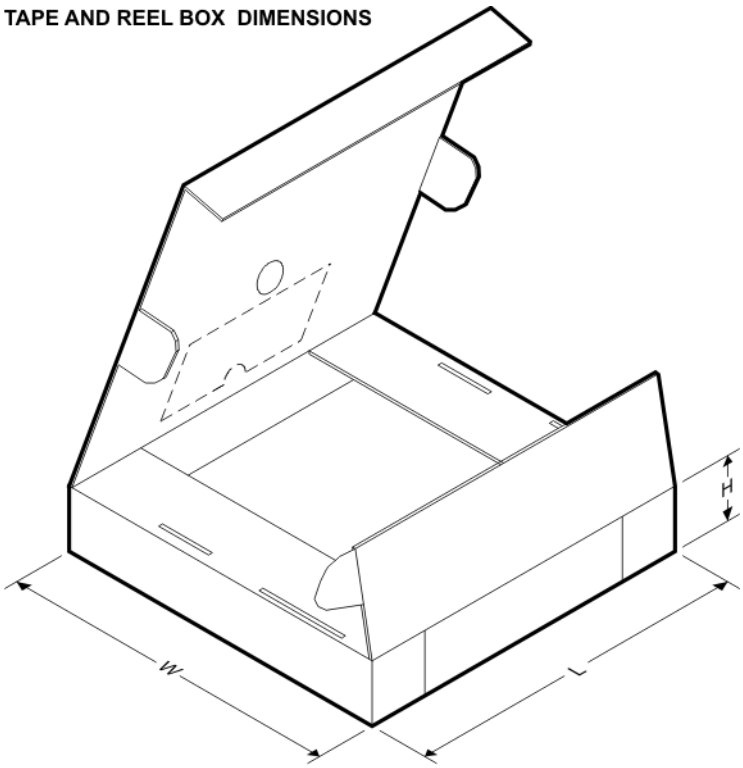

*All dimensions are nominal

Device	Package Type	Package Drawing	Pins	SPQ	Length (mm)	Width (mm)	Height (mm)
BQ24196RGER	VQFN	RGE	24	3000	367.0	367.0	35.0
BQ24196RGET	VQFN	RGE	24	250	210.0	185.0	35.0

RGE (S-PVQFN-N24) PLASTIC QUAD FLATPACK NO-LEAD

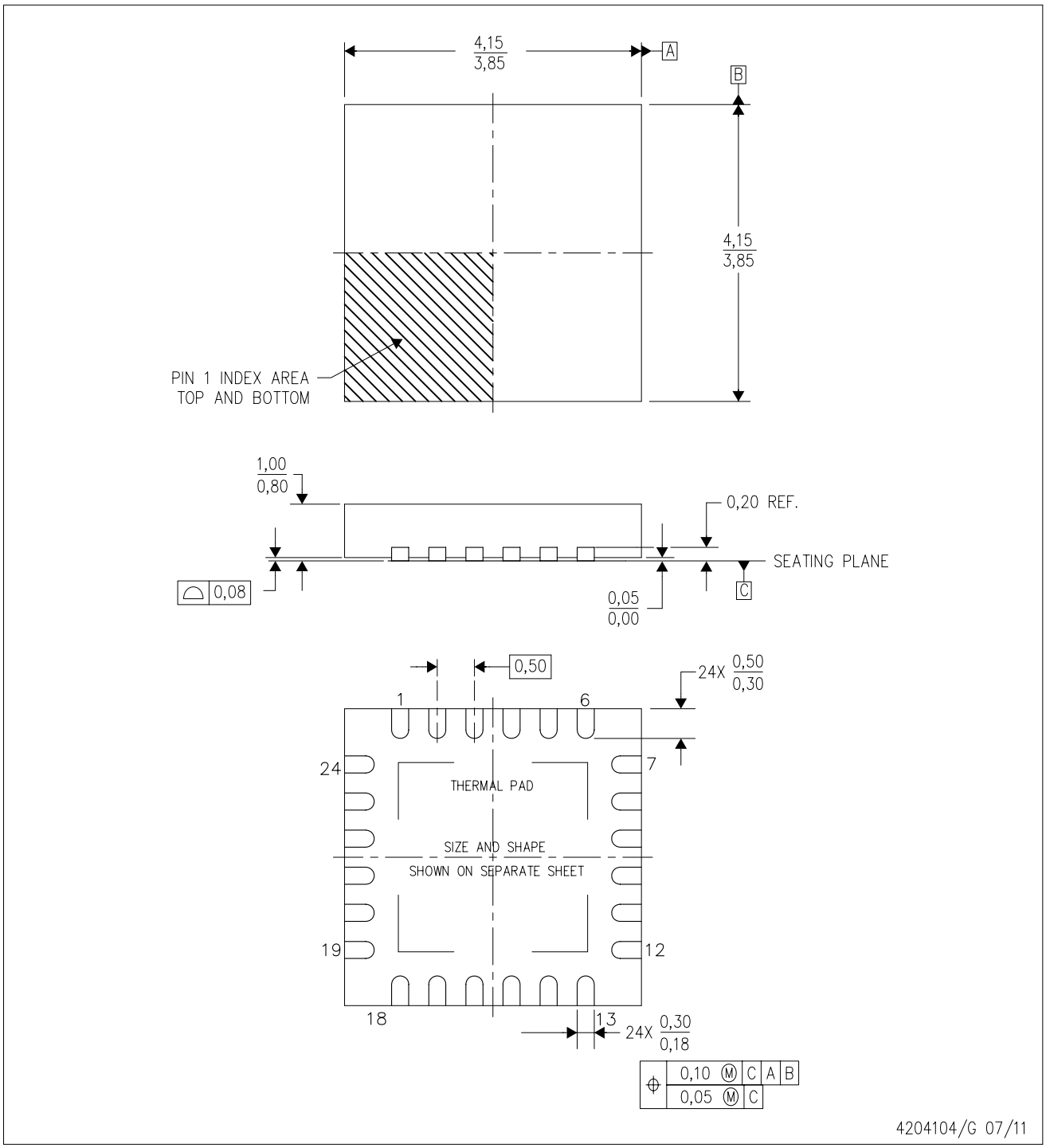

NOTES:
A. All linear dimensions are in millimeters. Dimensioning and tolerancing per ASME Y14.5M-1994.
B. This drawing is subject to change without notice.
C. Quad Flatpack, No-Leads (QFN) package configuration.
D. The package thermal pad must be soldered to the board for thermal and mechanical performance.
E. See the additional figure in the Product Data Sheet for details regarding the exposed thermal pad features and dimensions.
F. Falls within JEDEC MO-220.

IMPORTANT NOTICE

Texas Instruments Incorporated and its subsidiaries (TI) reserve the right to make corrections, enhancements, improvements and other changes to its semiconductor products and services per JESD46, latest issue, and to discontinue any product or service per JESD48, latest issue. Buyers should obtain the latest relevant information before placing orders and should verify that such information is current and complete. All semiconductor products (also referred to herein as “components”) are sold subject to TI’s terms and conditions of sale supplied at the time of order acknowledgment.

TI warrants performance of its components to the specifications applicable at the time of sale, in accordance with the warranty in TI’s terms and conditions of sale of semiconductor products. Testing and other quality control techniques are used to the extent TI deems necessary to support this warranty. Except where mandated by applicable law, testing of all parameters of each component is not necessarily performed.

TI assumes no liability for applications assistance or the design of Buyers’ products. Buyers are responsible for their products and applications using TI components. To minimize the risks associated with Buyers’ products and applications, Buyers should provide adequate design and operating safeguards.

TI does not warrant or represent that any license, either express or implied, is granted under any patent right, copyright, mask work right, or other intellectual property right relating to any combination, machine, or process in which TI components or services are used. Information published by TI regarding third-party products or services does not constitute a license to use such products or services or a warranty or endorsement thereof. Use of such information may require a license from a third party under the patents or other intellectual property of the third party, or a license from TI under the patents or other intellectual property of TI.

Reproduction of significant portions of TI information in TI data books or data sheets is permissible only if reproduction is without alteration and is accompanied by all associated warranties, conditions, limitations, and notices. TI is not responsible or liable for such altered documentation. Information of third parties may be subject to additional restrictions.

Resale of TI components or services with statements different from or beyond the parameters stated by TI for that component or service voids all express and any implied warranties for the associated TI component or service and is an unfair and deceptive business practice. TI is not responsible or liable for any such statements.

Buyer acknowledges and agrees that it is solely responsible for compliance with all legal, regulatory and safety-related requirements concerning its products, and any use of TI components in its applications, notwithstanding any applications-related information or support that may be provided by TI. Buyer represents and agrees that it has all the necessary expertise to create and implement safeguards which anticipate dangerous consequences of failures, monitor failures and their consequences, lessen the likelihood of failures that might cause harm and take appropriate remedial actions. Buyer will fully indemnify TI and its representatives against any damages arising out of the use of any TI components in safety-critical applications.

In some cases, TI components may be promoted specifically to facilitate safety-related applications. With such components, TI’s goal is to help enable customers to design and create their own end-product solutions that meet applicable functional safety standards and requirements. Nonetheless, such components are subject to these terms.

No TI components are authorized for use in FDA Class III (or similar life-critical medical equipment) unless authorized officers of the parties have executed a special agreement specifically governing such use.

Only those TI components which TI has specifically designated as military grade or “enhanced plastic” are designed and intended for use in military/aerospace applications or environments. Buyer acknowledges and agrees that any military or aerospace use of TI components which have ***not*** been so designated is solely at the Buyer's risk, and that Buyer is solely responsible for compliance with all legal and regulatory requirements in connection with such use.

TI has specifically designated certain components as meeting ISO/TS16949 requirements, mainly for automotive use. In any case of use of non-designated products, TI will not be responsible for any failure to meet ISO/TS16949.

Products		**Applications**	
Audio	www.ti.com/audio	Automotive and Transportation	www.ti.com/automotive
Amplifiers	amplifier.ti.com	Communications and Telecom	www.ti.com/communications
Data Converters	dataconverter.ti.com	Computers and Peripherals	www.ti.com/computers
DLP® Products	www.dlp.com	Consumer Electronics	www.ti.com/consumer-apps
DSP	dsp.ti.com	Energy and Lighting	www.ti.com/energy
Clocks and Timers	www.ti.com/clocks	Industrial	www.ti.com/industrial
Interface	interface.ti.com	Medical	www.ti.com/medical
Logic	logic.ti.com	Security	www.ti.com/security
Power Mgmt	power.ti.com	Space, Avionics and Defense	www.ti.com/space-avionics-defense
Microcontrollers	microcontroller.ti.com	Video and Imaging	www.ti.com/video
RFID	www.ti-rfid.com		
OMAP Applications Processors	www.ti.com/omap	**TI E2E Community**	e2e.ti.com
Wireless Connectivity	www.ti.com/wirelessconnectivity		

Mailing Address: Texas Instruments, Post Office Box 655303, Dallas, Texas 75265
Copyright © 2014, Texas Instruments Incorporated

AMEYA360
Components Supply Platform

Authorized Distribution Brand :

Website :

Welcome to visit www.ameya360.com

Contact Us :

- ## Address :

401 Building No.5, JiuGe Business Center, Lane 2301, Yishan Rd
Minhang District, Shanghai , China

- ## Sales :

Direct +86 (21) 6401-6692

Email amall@ameya360.com

QQ 800077892

Skype ameyasales1 ameyasales2

- ## Customer Service :

Email service@ameya360.com

- ## Partnership :

Tel +86 (21) 64016692-8333

Email mkt@ameya360.com