REV.	DESCRIPTION/ECO NO.	DATE
	ENGINEERING TO CAD	3/7/05

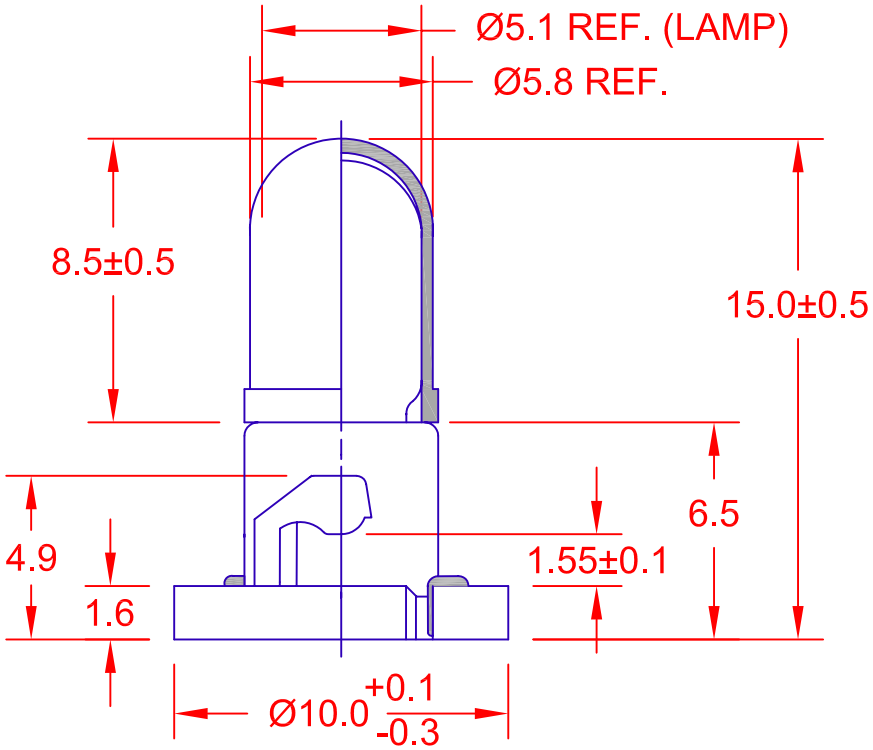

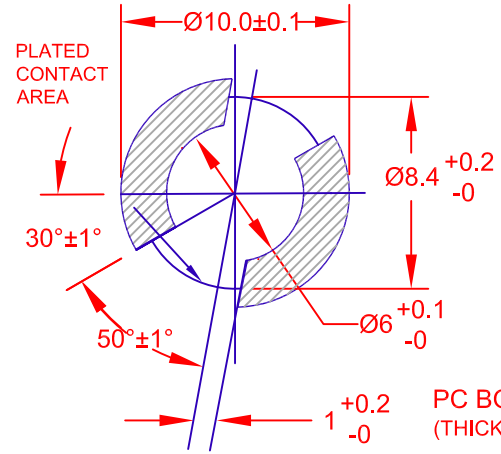

PC BOARD PUNCH PATTERN
(THICKNESS 1.6±0.1)

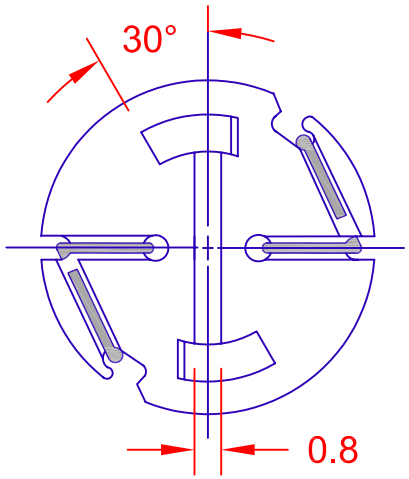

JKL PART NUMBER: DNW1-EW87/GRA/39-08-6C***

JKL LAMP NUMBER	VOLTS RATED	AMPS ± 10%	MSCP ± 25%	LUMENS ± 25%	AVERAGE LIFE HRS.	FILAMENT TYPE
EW87**	14.0	.140	.95*	12.0*	7,000	C-2V

* LAMP RATING ONLY WITHOUT BASE AND FILTER.
** LAMP GLASS LEAD (Pb) FREE.
*** LAMP AND BASE ASSEMBLY LEAD (Pb) FREE.

CONTACT JKL FOR LEAD (Pb) FREE LOT IDENTIFICATION.

COMPLETE ASSEMBLY WITH FILTER

JKL FILTER NUMBER	APPLICATION VOLTS	x ±.02	y ±.02
39-08-6C	13.8	.2664	.3627

COLOR COORDINATES MEASURED IN SPHERE

BASE COLOR: GRAY

METRIC THIRD ANGLE PROJECTION	DIMENSIONS ARE IN MILLIMETERS TOLERANCE UNLESS OTHERWISE SPECIFIED 1 PL +/- 0.3 2 PL +/- 0.30 ANGLE +/- 0	JKL COMPONENTS CORPORATION				
		TITLE	T-1 1/4 NEO-WEDGE SOCKET WITH T-1 1/2 LAMP AND 39-08 FILTER			
DRAWN BY L. WENGSTROM	APPV'D BY J.K. DATE 3/7/05	SIZE A	FSCM NO. 55335	DRAWING NO. DNW1-EW87/GRA/39-08-6C		
- CAD DRAWING - MANUAL REVISIONS NOT PERMITTED		SCALE NONE		RELEASED DATE 3/7/05	REVISION DATE	REV. NO. / SHEET 1 OF 1

AMEYA360
Components Supply Platform

Authorized Distribution Brand :

Website :

Welcome to visit www.ameya360.com

Contact Us :

- **Address :**

  401 Building No.5, JiuGe Business Center, Lane 2301, Yishan Rd
  Minhang District, Shanghai , China

- **Sales :**

  Direct +86 (21) 6401-6692

  Email amall@ameya360.com

  QQ 800077892

  Skype ameyasales1 ameyasales2

- **Customer Service :**

  Email service@ameya360.com

- **Partnership :**

  Tel +86 (21) 64016692-8333

  Email mkt@ameya360.com