REV.	DESCRIPTION	DATE	APPROVED
F	Engineering Release.	10/03/12	T. Y.

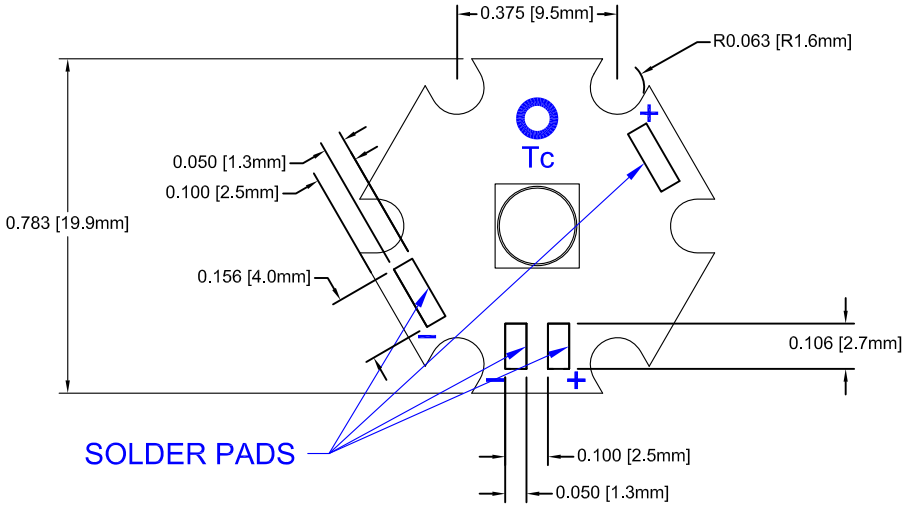

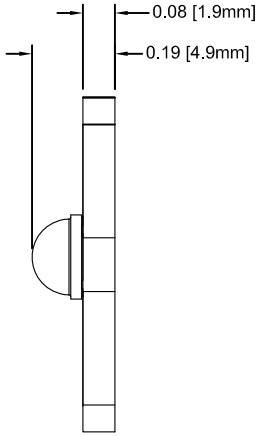

Table 1: Typical Characteristics without Additional Heat Sink						
Part Number	CCT (K)	CRI	Typical Luminous Flux @ If = 400mA, Tc=70C (lm)	Typical Luminous Flux @ If = 750mA, Tc=100C (lm)	Typical DC Forward Current,Vf (V)	Viewing Angle, Axis 1 / Axis2 (°)
L2-MLC1-S	6500	65	144	236	2.8 ~ 2.9	125
L2-MLN1-S	4100	75	124	202	2.8 ~ 2.9	125
L2-MLW1-S	3100	80	103	169	2.8 ~ 2.9	125

Table 2: Absolute Maximum Ratings with Thermal Management						
Part Number	CCT (K)	CRI	Typical Luminous Flux @ If = 1000mA, Tc=110C (lm)	Typical Luminous Flux @ If = 3000mA, Tc=60C (lm)	Typical DC Forward Current,Vf (V)	Viewing Angle, Axis 1 / Axis2 (°)
L2-MLC1-S	6500	65	281	660	3.0 ~ 3.3	125
L2-MLN1-S	4100	75	241	566	3.0 ~ 3.3	125
L2-MLW1-S	3100	80	201	472	3.0 ~ 3.3	125

STANDARD TOLERANCE
(UNLESS OTHERWISE SPECIFIED)

DECIMALS		ANGULAR	
.X	± .1	X°	± 1°
.XX	± .02		
.XXX	± .010		

BIVAR®
4 THOMAS, IRVINE, CA. 92618
TEL: (949) 951-8808 FAX: (949) 951-3974

TITLE: L2 Starboard Light Engine

DESIGNED:	DATE:	PART NO:	REVISION:
Brian Oliver	11/02/11	L2-MLXX-S	F
CHECKED: M. Chen	DATE: 11/02/11	CAGE CODE : 32559	SHEET # 1 OF 1

CAD GENERATED DOCUMENT, DO NOT MEASURE DRAWING.

AMEYA360
Components Supply Platform

Authorized Distribution Brand :

Website :

Welcome to visit www.ameya360.com

Contact Us :

- ### Address :

  401 Building No.5, JiuGe Business Center, Lane 2301, Yishan Rd
  Minhang District, Shanghai , China

- ### Sales :

  Direct +86 (21) 6401-6692

  Email amall@ameya360.com

  QQ 800077892

  Skype ameyasales1 ameyasales2

- ### Customer Service :

  Email service@ameya360.com

- ### Partnership :

  Tel +86 (21) 64016692-8333

  Email mkt@ameya360.com