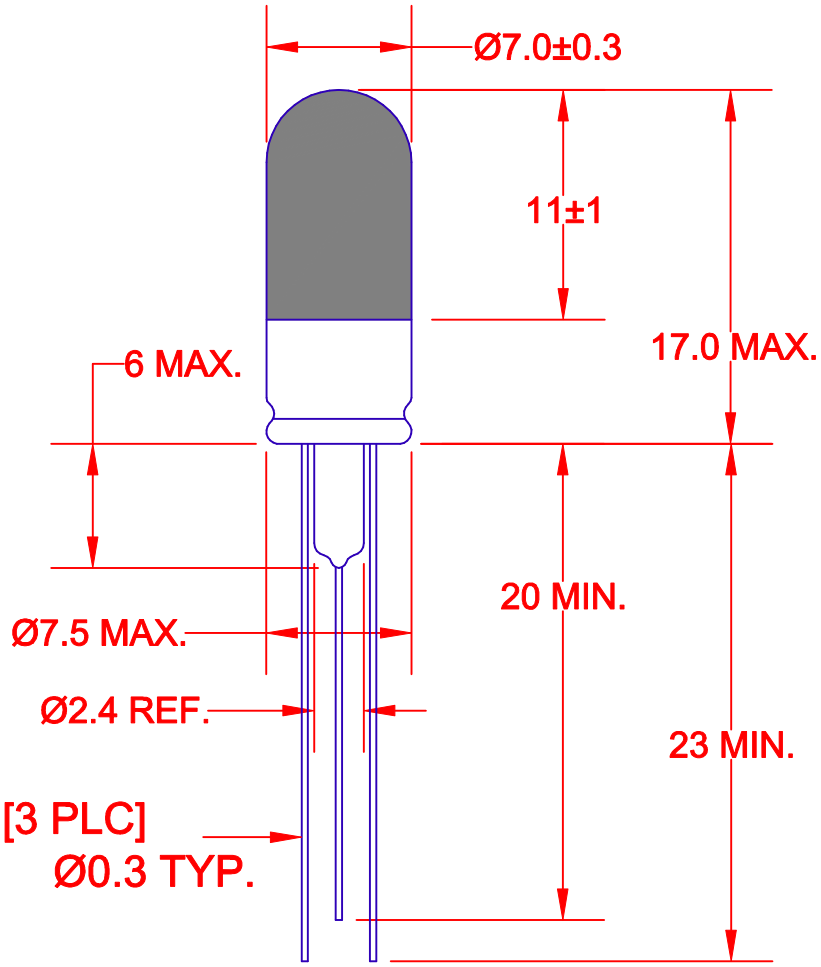

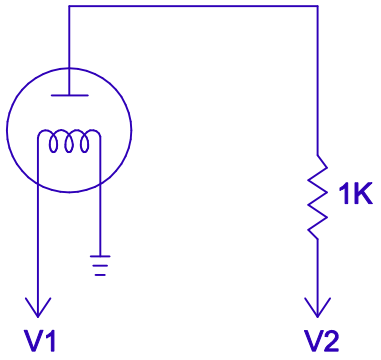

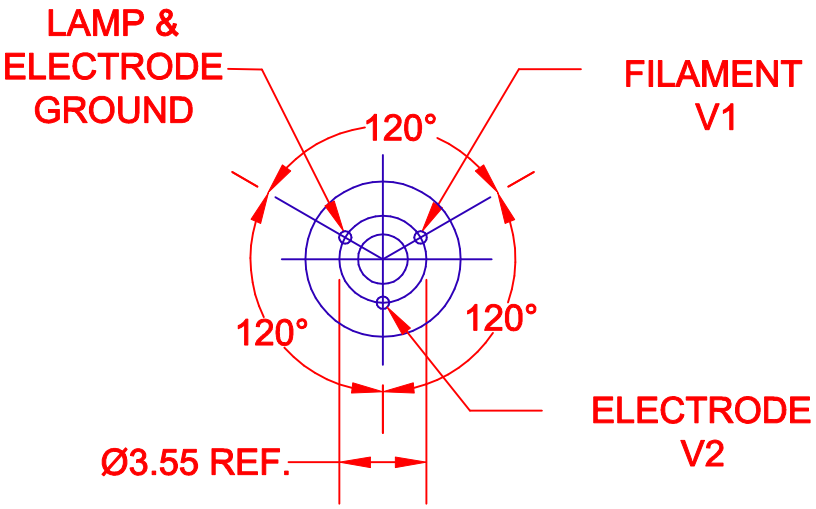

V1 FILAMENT:
5.2-5.5 VDC
FILAMENT CURRENT:
45 +/- 10 mA DC
V2 ELECTRODE SOURCE:
24-26 V DC TYP.
ELECTRODE CURRENT:
14 +/- 3.0 mA DC
BALLAST RESISTOR:
1K TYP.
ELECTRODE RUNNING VOLTAGE:
10 +/- 3.0 V DC
TOTAL LAMP WATTAGE:
.40 TYP.
INTENSITY
3000 Cd/m2 MIN.
LIFE HOURS:
*15,000

*TO 50% OUTPUT INTENSITY

JKL PART NO.: BGF717-22

REV. NO.	DESCRIPTION/ECO NUMBER	APPV'D DATE
B	RELEASED TO CAD	5/9/01
A	LIFE HRS-LEAD LENGTH	11/9/99
	RELEASED	7/2/99

METRIC
THIRD ANGLE PROJECTION

DIMENSIONS ARE IN MILLIMETERS
TOLERANCE UNLESS OTHERWISE SPECIFIED
1 PL +/- 0.2
2 PL +/- 0.20
ANGLE +/- 0

JKL COMPONENTS CORPORATION

TITLE: MINIATURE HOT CATHODE FLUORESCENT LAMP (ACORN)

DRAWN BY	APPV'D BY	DATE	SIZE	FSCM NO.	DRAWING NO.
L. WENGSTROM	F.D.	5/9/01	A	55335	BGF717-22

- CAD DRAWING -
MANUAL REVISIONS NOT PERMITTED

SCALE	RELEASED DATE	REVISION DATE	REV. NO.	SHEET
NONE	7/2/99	5/9/01	B	1 OF 1

AMEYA360
Components Supply Platform

Authorized Distribution Brand :

Website :

Welcome to visit www.ameya360.com

Contact Us :

- ### Address :

  401 Building No.5, JiuGe Business Center, Lane 2301, Yishan Rd
  Minhang District, Shanghai , China

- ### Sales :

  Direct +86 (21) 6401-6692

  Email amall@ameya360.com

  QQ 800077892

  Skype ameyasales1 ameyasales2

- ### Customer Service :

  Email service@ameya360.com

- ### Partnership :

  Tel +86 (21) 64016692-8333

  Email mkt@ameya360.com