0.6A LOW DROPOUT POSITIVE ADJUSTABLE OR FIXED-MODE REGULATOR

Description

AP1115 is a low dropout positive adjustable or fixed mode regulator with 0.6A output current capability. The product is specifically designed to provide well-regulated supply for low voltage IC applications such as high-speed bus termination and low current 3.3V logic supply. AP1115 is also well suited for other applications such as VGA cards. AP1115 is guaranteed to have <1.3V dropout at full load current making it ideal to provide well regulated outputs of 1.25V to 5V with up to 18V input supply.

Features

- 1.3V Maximum Dropout at Full Load Current
- Fast Transient Response
- Output Current Limiting
- Built-In Thermal Shutdown
- Good Noise Rejection
- 3-Terminal Adjustable or Fixed 1.5V / 1.8V / 2.5V / 2.8V/ 3.0V / 3.3V / 3.5V / 5.0V
- Lead Free Package: SOT89-3L
  - **Totally Lead-Free; RoHS Compliant (Notes 1 & 2)**
- SOT89-3L: Available in "Green" Molding Compound (No Br, Sb)
  - **Halogen and Antimony Free. "Green" Device (Note 3)**

Applications

- PC Peripheral
- Communication

Pin Assignments

AP1115A

(Top View)

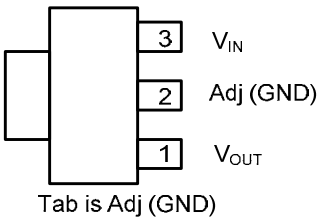

SOT89-3

AP1115B

(Top View)

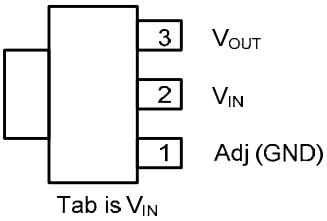

SOT89-3

Notes:
1. No purposely added lead. Fully EU Directive 2002/95/EC (RoHS) & 2011/65/EU (RoHS 2) compliant.
2. See http://www.diodes.com for more information about Diodes Incorporated's definitions of Halogen and Antimony free, "Green" and Lead-Free.
3. Halogen and Antimony free "Green" products are defined as those which contain <900ppm bromine, <900ppm chlorine (<1500ppm total Br + Cl) and <1000ppm antimony compounds.

© Diodes Incorporated

Typical Applications Circuit

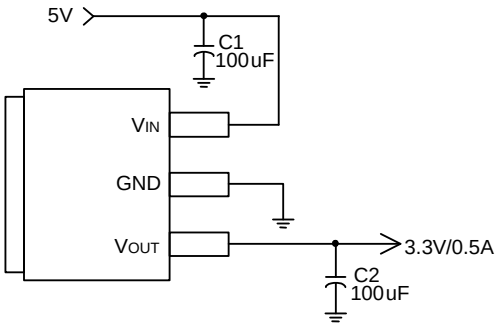

AP1115A (5V/3.3V Fixed Output)

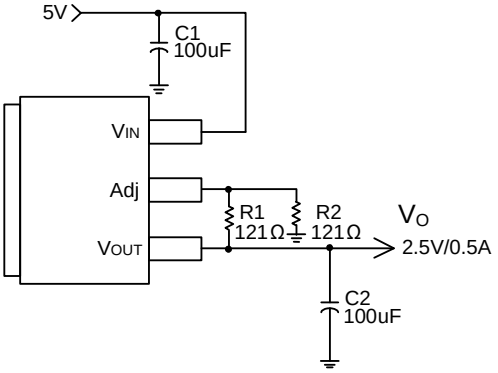

AP1115A (5V/2.5V Adj Output)

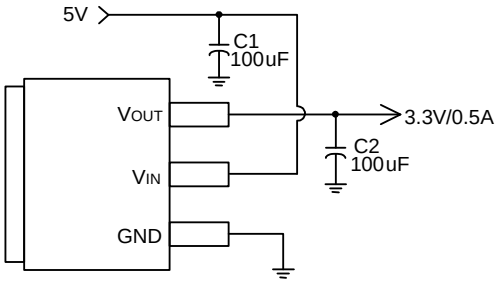

AP1115B (5V/3.3V Fixed Output)

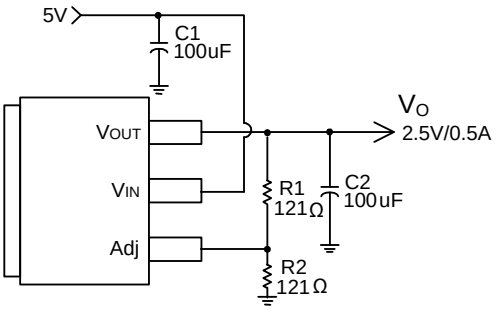

AP1115B (5V/2.5V Adj Output)

$$\text{Note}: V_o = V_{REF} \times (1 + \frac{R_2}{R_1})$$

Pin Descriptions

Pin Name	I/O	Function
Adj (GND)	I	A resistor divider from this pin to the V_{OUT} pin and ground sets the output voltage (Ground only for Fixed-Mode).
V_{OUT}	O	The output of the regulator. A minimum of 10uF capacitor (0.15Ω ≤ ESR ≤ 20Ω) must be connected from this pin to ground to insure stability.
V_{IN}	I	The input pin of regulator. Typically a large storage capacitor (0.15Ω ≤ ESR ≤ 20Ω) is connected from this pin to ground to insure that the input voltage does not sag below the minimum dropout voltage during the load transient response. This pin must always be 1.3V higher than V_{OUT} in order for the device to regulate properly.

© Diodes Incorporated

Absolute Maximum Ratings (@T_A = +25°C, unless otherwise specified.)

Symbol	Parameter	Rating	Unit
V_{IN}	DC Supply Voltage	-0.3 to +18	V
P_D	Power Dissipation	Internally Limited	mW
T_{ST}	Storage Temperature	-65 to +150	°C
T_{MJ}	Maximum Junction Temperature	+150	°C

Stresses greater than the 'Absolute Maximum Ratings' specified above, may cause permanent damage to the device. These are stress ratings only; functional operation of the device at these or any other conditions exceeding those indicated in this specification is not implied. Device reliability may be affected by exposure to absolute maximum rating conditions for extended periods of time.

Recommended Operating Conditions

Symbol	Parameter	Min	Max	Unit
T_{OP}	Operating Junction Temperature Range	0	+125	°C

Electrical Characteristics (@T_A = +25°C, unless otherwise specified.)

Parameter	Conditions		Min	Typ	Max	Unit
Reference Voltage	AP1115-ADJ	T_A = +25°C, (V_{IN} - $_{OUT}$) = 1.5V, I_O = 10mA	1.225	1.250	1.275	V
Output Voltage	AP1115-1.5	I_{OUT} = 10mA, T_A = +25°C, 3V ≤ V_{IN} ≤ 12V	1.470	1.500	1.530	V
	AP1115-1.8	I_{OUT} = 10mA, T_A = +25°C, 3.3V ≤ V_{IN} ≤ 12V	1.764	1.800	1.836	V
	AP1115-2.5	I_{OUT} = 10mA, T_A = +25°C, 4V ≤ V_{IN} ≤ 12V	2.450	2.500	2.550	V
	AP1115-2.8	I_{OUT} = 10mA, T_A = +25°C, 4.3V ≤ V_{IN} ≤ 12V	2.744	2.800	2.856	V
	AP1115-3.0	I_{OUT} = 10mA, T_A = +25°C, 4.5V ≤ V_{IN} ≤ 12V	2.940	3.000	3.060	V
	AP1115-3.3	I_{OUT} = 10mA, T_A = +25°C, 4.8V≤ V_{IN} ≤ 12V	3.235	3.300	3.365	V
	AP1115-3.5	I_{OUT} = 10mA, T_A = +25°C, 5V ≤ V_{IN} ≤ 12V	3.430	3.500	3.570	V
	AP1115-5.0	I_{OUT} = 10mA, T_A = +25°C, 6.5V ≤ V_{IN} ≤ 12V	4.900	5.000	5.100	V
Line Regulation	AP1115-XXX	I_O = 10mA, V_{OUT} + 1.5V < V_{IN} < 15V, T_A = +25°C	—	—	0.2	%
Load Regulation	AP1115-ADJ	V_{IN} = 3.3V, V_{ADJ} = 0,0mA < Io < 0.6A, T_A = +25°C (Notes 4 & 5)	—	—	1	%
	AP1115-1.5	V_{IN} = 3V, 0mA < Io < 0.6A,T_A = +25°C (Notes 4 & 5)	—	12	15	mV
	AP1115-1.8	V_{IN} = 3.3V, 0mA < Io < 0.6A, T_A = +25°C (Notes 4 & 5)	—	15	18	mV
	AP1115-2.5	V_{IN} = 4V, 0mA < Io < 0.6A, T_A = +25°C (Notes 4 & 5)	—	20	25	mV
	AP1115-2.8	V_{IN} = 4.3V, 0mA < Io < 0.6A, T_A = +25°C (Notes 4 & 5)	—	22	28	mV
	AP1115-3.0	V_{IN} = 5V, 0 ≤ I_{OUT} ≤ 0.6A, T_A = +25°C (Notes 4 & 5)	—	23	30	mV
	AP1115-3.3	V_{IN} = 5V, 0 ≤ I_{OUT} ≤ 0.6A, T_A = +25°C (Notes 4 & 5)	—	26	33	mV
	AP1115-3.5	V_{IN} = 5V, 0 ≤ I_{OU}T ≤ 0.6A, T_A = +25°C (Notes 4 & 5)	—	28	35	mV
	AP1115-5.0	V_{IN} = 8V, 0 ≤ I_{OU}T ≤ 0.6A, T_A = +25°C (Notes 4 & 5)	—	40	50	mV

Notes:
4. See thermal regulation specifications for changes in output voltage due to heating effects. Line and load regulation are measured at a constant junction temperature by low duty cycle pulse testing. Load regulation is measured at the output lead = 1/18" from the package.
5. Line and load regulation are guaranteed up to the maximum power dissipation of 5W. Power dissipation is determined by the input/output differential and the output current. Guaranteed maximum power dissipation will not be available over the full input/output range.

© Diodes Incorporated

Electrical Characteristics (cont.) (@T_A = +25°C, unless otherwise specified.)

Parameter	Conditions		Min	Typ	Max	Unit
Dropout Voltage (V_{IN}-V_{OUT})	AP1115-ADJ/1.5/1.8 2.5/2.8/3.0/3.3/3.5/5.0	I_{OUT} = 0.6A, ΔV_{OUT} = 1%V_{OUT}	—	1.1	1.3	V
Current Limit	AP1115-ADJ/1.5/1.8 2.5/2.8/3.0/3.3/3.5/5.0	(V_{IN} -V_{OUT}) = 5V	0.7	—	—	A
Minimum Load Current (Note 6)	AP1115-XXX	0°C ≤ T_J ≤ +125°C	—	5	10	mA
Thermal Regulation	T_A = +25°C, 30ms pulse		—	0.008	0.04	%/W
Ripple Rejection	f = 120Hz,C_{OUT} = 25µF Tantalum, I_{OUT} = 0.6A					
	AP1115-XXX	V_{IN} = V_{OUT} +3V	—	60	70	dB
Temperature Stability	I_O = 10mA		—	0.6	—	%
θ_{JA}	Thermal Resistance Junction-to-Ambient (No heat sink; No air flow) (Note 7)		—	164	—	°C/W
θ_{JC}	Thermal Resistance Junction-to-Case Control Circuitry/Power Transistor (Note 7)		—	35	—	°C/W

Notes: 6. Quiescent current is defined as the minimum output current required to maintain regulation. At 12V input/output differential the device is guaranteed to regulate if the output current is greater than 10mA.
7. Test conditions for SOT89-3L: Device mounted on FR-4 substrate, 2oz copper, with minimum recommended pad layout.

© Diodes Incorporated

Typical Performance Characteristics

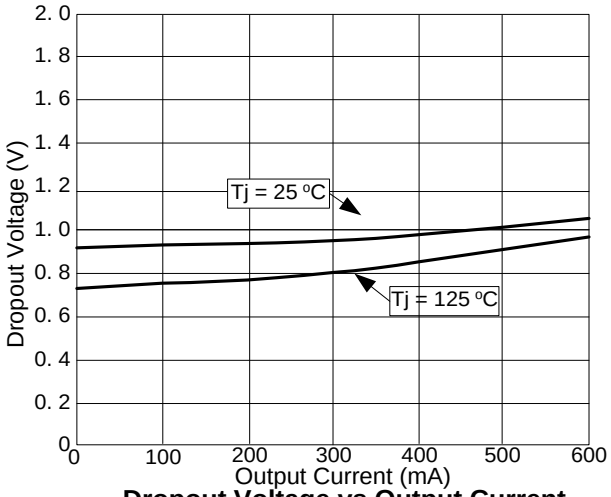

Dropout Voltage vs Output Current

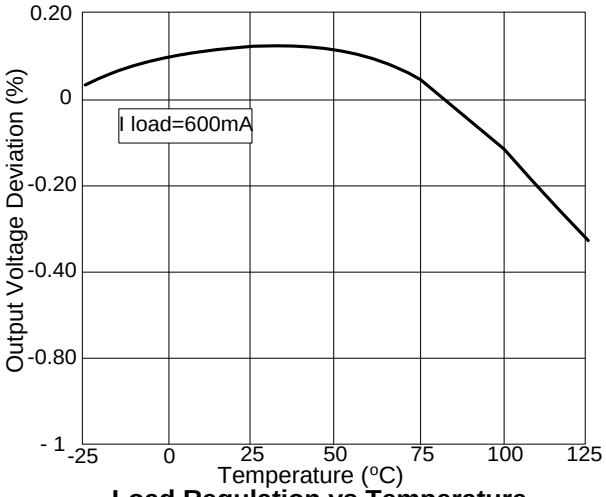

Load Regulation vs Temperature

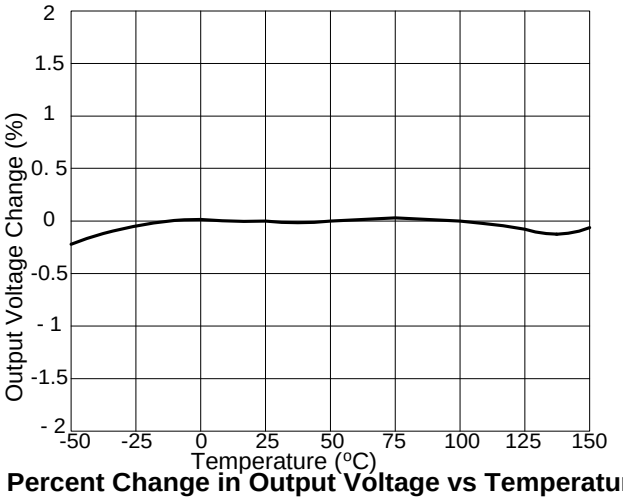

Percent Change in Output Voltage vs Temperature

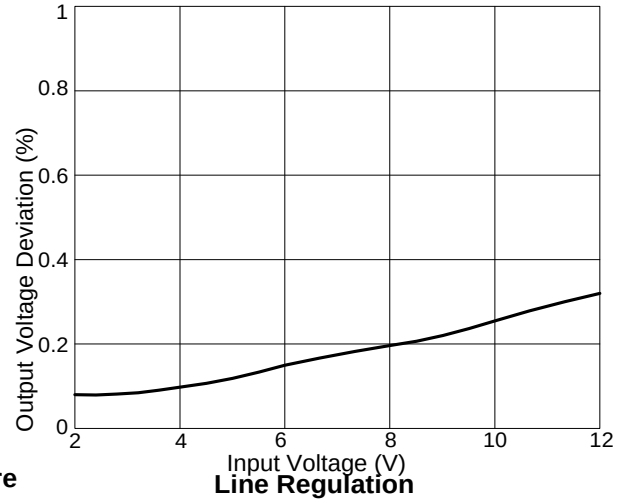

Line Regulation

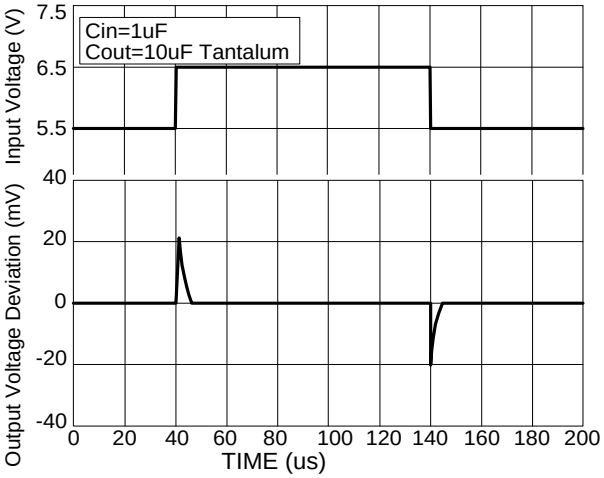

Line Transient Response

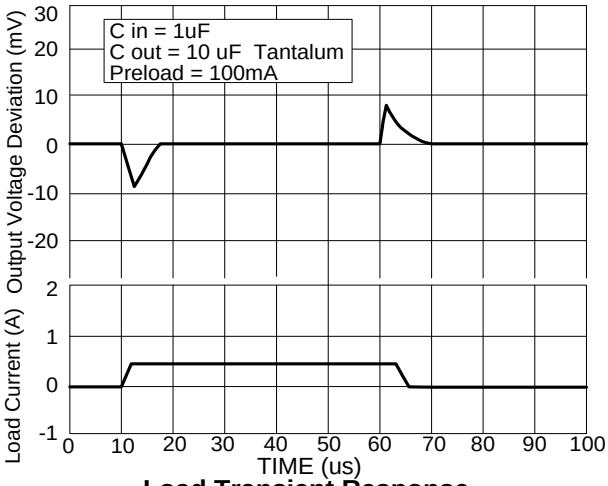

Load Transient Response

© Diodes Incorporated

Ordering Information

AP1115 X Y XX X - 13X

Pin Version	Package	Vout	Lead Free	Packing
A : Pin1 : VOUT 2 : Adj(GND) 3 : VIN B : Pin1 : Adj(GND) 2 : VIN 3 : VOUT	Y : SOT89-3	Blank : ADJ 15 : 1.5V 18 : 1.8V 25 : 2.5V 28 : 2.8V 30 : 3.0V 33 : 3.3V 35 : 3.5V 50 : 5.0V	L : Lead Free G : Green	13 : Tape & Reel 13R : Tape & Reel

Device	Package Code	Packaging (Note 8)	13" Tape and Reel (Note 9)	
			Quantity	Part Number Suffix
AP1115XYXXL-13	Y	SOT89-3	2500/Tape & Reel	-13
AP1115XYXXG-13	Y	SOT89-3	2500/Tape & Reel	-13
AP1115XYXXL-13R	Y	SOT89-3	4000/Tape & Reel	-13R
AP1115XYXXG-13R	Y	SOT89-3	4000/Tape & Reel	-13R

Notes: 8. Pad layout as shown on Diodes Inc. suggested pad layout document AP02001, which can be found on our website at http://www.diodes.com/datasheets/ap02001.pdf.
9. Find Surface Mount (SMD) Packaging and Reel and Carrier Tape specification in document AP02007.pdf http://www.diodes.com/datasheets/ap02007.pdf

Marking Information

SOT89-3

(Top View)

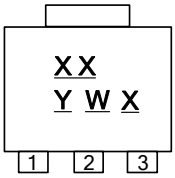

XX : Identification code
Y : Year : 0~9
W : Week : A~Z : 1~26 week;
a~z : 27~52 week;
z represents 52 and 53 week
X : Internal code
a~z : Lead Free
A~Z : Green

Output Version	Identification Code	
	AP1115A	AP1115B
ADJ	JO	JU
1.5V	JP	JV
1.8V	JQ	JW
2.5V	JR	JX
2.8V	JC	JD
3.0V	JM	JN
3.3V	JS	JY
3.5V	JK	JL
5.0V	JT	JZ

© Diodes Incorporated

Package Outline Dimensions (All dimensions in mm.)

Please see AP02002 at http://www.diodes.com/datasheets/ap02002.pdf for latest version.

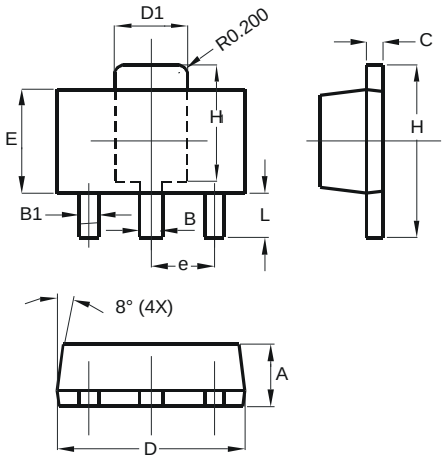

SOT89-3		
Dim	**Min**	**Max**
A	1.40	1.60
B	0.44	0.62
B1	0.35	0.54
C	0.35	0.44
D	4.40	4.60
D1	1.62	1.83
E	2.29	2.60
e	1.50 Typ	
H	3.94	4.25
H1	2.63	2.93
L	0.89	1.20
All Dimensions in mm		

Suggested Pad Layout

Please see AP02001 at http://www.diodes.com/datasheets/ap02001.pdf for the latest version.

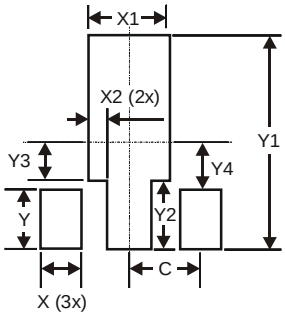

Dimensions	Value (in mm)
X	0.900
X1	1.733
X2	0.416
Y	1.300
Y1	4.600
Y2	1.475
Y3	0.950
Y4	1.125
C	1.500

© Diodes Incorporated

IMPORTANT NOTICE

DIODES INCORPORATED MAKES NO WARRANTY OF ANY KIND, EXPRESS OR IMPLIED, WITH REGARDS TO THIS DOCUMENT, INCLUDING, BUT NOT LIMITED TO, THE IMPLIED WARRANTIES OF MERCHANTABILITY AND FITNESS FOR A PARTICULAR PURPOSE (AND THEIR EQUIVALENTS UNDER THE LAWS OF ANY JURISDICTION).

Diodes Incorporated and its subsidiaries reserve the right to make modifications, enhancements, improvements, corrections or other changes without further notice to this document and any product described herein. Diodes Incorporated does not assume any liability arising out of the application or use of this document or any product described herein; neither does Diodes Incorporated convey any license under its patent or trademark rights, nor the rights of others. Any Customer or user of this document or products described herein in such applications shall assume all risks of such use and will agree to hold Diodes Incorporated and all the companies whose products are represented on Diodes Incorporated website, harmless against all damages.

Diodes Incorporated does not warrant or accept any liability whatsoever in respect of any products purchased through unauthorized sales channel. Should Customers purchase or use Diodes Incorporated products for any unintended or unauthorized application, Customers shall indemnify and hold Diodes Incorporated and its representatives harmless against all claims, damages, expenses, and attorney fees arising out of, directly or indirectly, any claim of personal injury or death associated with such unintended or unauthorized application.

Products described herein may be covered by one or more United States, international or foreign patents pending. Product names and markings noted herein may also be covered by one or more United States, international or foreign trademarks.

LIFE SUPPORT

Diodes Incorporated products are specifically not authorized for use as critical components in life support devices or systems without the express written approval of the Chief Executive Officer of Diodes Incorporated. As used herein:

A. Life support devices or systems are devices or systems which:

1. are intended to implant into the body, or

2. support or sustain life and whose failure to perform when properly used in accordance with instructions for use provided in the labeling can be reasonably expected to result in significant injury to the user.

B. A critical component is any component in a life support device or system whose failure to perform can be reasonably expected to cause the failure of the life support device or to affect its safety or effectiveness.

Customers represent that they have all necessary expertise in the safety and regulatory ramifications of their life support devices or systems, and acknowledge and agree that they are solely responsible for all legal, regulatory and safety-related requirements concerning their products and any use of Diodes Incorporated products in such safety-critical, life support devices or systems, notwithstanding any devices- or systems-related information or support that may be provided by Diodes Incorporated. Further, Customers must fully indemnify Diodes Incorporated and its representatives against any damages arising out of the use of Diodes Incorporated products in such safety-critical, life support devices or systems.

Copyright © 2012, Diodes Incorporated

www.diodes.com

AMEYA360
Components Supply Platform

Authorized Distribution Brand :

Website :

Welcome to visit www.ameya360.com

Contact Us :

- ## Address :

401 Building No.5, JiuGe Business Center, Lane 2301, Yishan Rd
Minhang District, Shanghai , China

- ## Sales :

Direct +86 (21) 6401-6692

Email amall@ameya360.com

QQ 800077892

Skype ameyasales1 ameyasales2

- ## Customer Service :

Email service@ameya360.com

- ## Partnership :

Tel +86 (21) 64016692-8333

Email mkt@ameya360.com