DIMENSIONS IN INCHES (MILLIMETERS)
DO NOT SCALE DRAWING .....

Dwg. No.
CWR-181-XX-0000

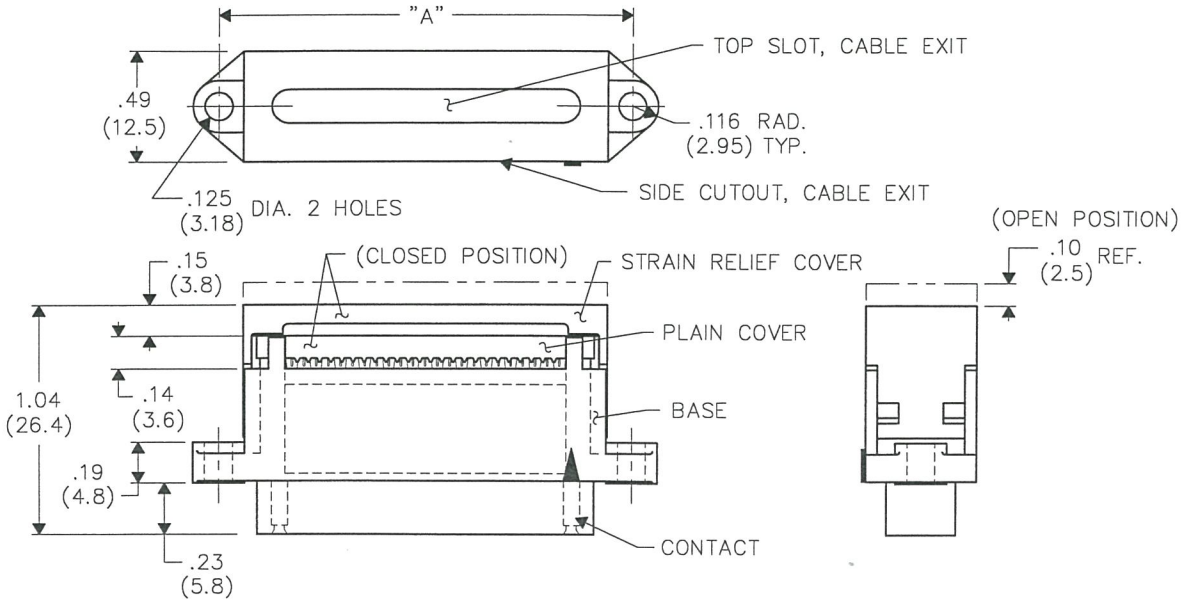

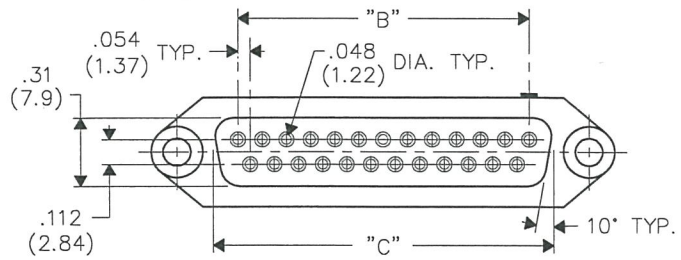

NO. CONTS.	A	B	C
9	.984 (24.99)	.434 (11.02)	.640 (16.26)
15	1.312 (33.32)	.760 (19.30)	.966 (24.54)
25	1.852 (47.04)	1.303 (33.10)	1.510 (38.35)
37	2.500 (63.50)	1.955 (49.66)	2.162 (54.91)

NOTES:

1. Dimensions are in inches; dimensions in ( ) are millimeters.
2. Metric equivalents are given for general information only, and are based upon 1.00 inches equals (25.4) millimeters.
3. Unless otherwise specified, tolerances are ±.005 (.13) for three place decimals, and ±.01 (.3) for two place decimals.

MATERIALS:

PLASTIC PARTS – UL94V-0 thermoplastic (blue, standard) flame retardant.

CONTACTS – Phosphor bronze.

CONTACT PLATING– Selective gold plating, .000010 (min.) gold in mating area and .000100(min.) Tin Plating on the termination end, All over .000050 (min.) nickel.

OPERATING STANDARDS:

TEMPERATURE RATING – 120° C
CONTACT RATING – 1 ampere.
DIELECTRIC STRENGTH – Over 500V.D.C. at sea level.
CONDUCTORS ACCEPTED – 28–30 AWG solid or stranded.
INSULATION RESISTANCE – Greater than 5×10^9 ohms.

CUSTOMER DRAWING

REVISIONS

0	RELEASED. DGW 12-04-96	
1	TIN-LEAD WAS REMOVED & TIN-PLATING WAS ADDED IN CONTACT PLATING. DGW 3-31-2006	G.G. APR 03 2006

FORM-B3

ATTENTION
THIS DRAWING AND ITS ATTACHMENTS, IF ANY, ARE PROPRIETARY TO CW INDUSTRIES AND DESCRIBE DESIGNS THAT ARE CONFIDENTIAL AND MUST NOT BE DISCLOSED UNLESS AUTHORIZED, IN WRITING, BY AN OFFICER OF CW INDUSTRIES.....

(PDF File Made)

CW INDUSTRIES
Southampton, Pa. 18966

TOLERANCES UNLESS OTHERWISE SPECIFIED
2 Place Decimal ±.010
3 Place Decimal ±.005
Angles ..... ±1°
METRIC
1 Place Dec. ±.25mm
2 Place Dec. ±.13mm

Made for: CW IND.
Drawn by: DGW 12-04-96
Checked by: G. GULD 12-9-96
Approval: A. HOSFELD 12-9-96

Title: PLASTIC "D" CONNECTOR (PLUG) FEMALE CONTACTS

Division: CONNECTOR

Dwg. No. CWR-181-XX-0000

MASTER

AMEYA360
Components Supply Platform

Authorized Distribution Brand :

Website :

Welcome to visit www.ameya360.com

Contact Us :

- **Address :**

  401 Building No.5, JiuGe Business Center, Lane 2301, Yishan Rd
  Minhang District, Shanghai , China

- **Sales :**

  Direct +86 (21) 6401-6692

  Email amall@ameya360.com

  QQ 800077892

  Skype ameyasales1 ameyasales2

- **Customer Service :**

  Email service@ameya360.com

- **Partnership :**

  Tel +86 (21) 64016692-8333

  Email mkt@ameya360.com