REVISIONS						
REV	ZONE	ECO	DESCRIPTION	DATE	BY	APPR
01	--	--	RELEASE NUMBER	15-JAN-10	--	--
02	--	--	CHANGE TOLERANCE	18-July-11	--	--
03	--	--	Increase Mechanical properties	23-Aug-11	--	--

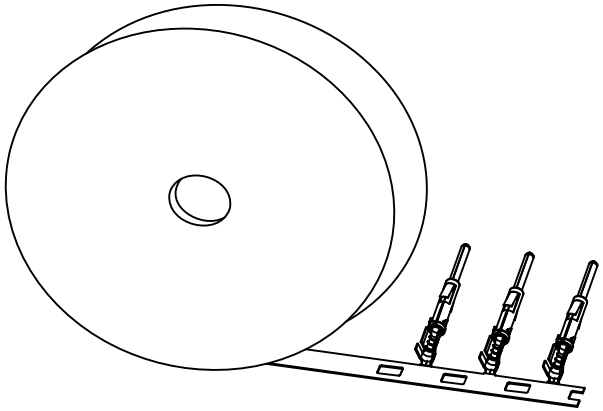

Contact Orientation On Rell
For Auto Crimp Machine

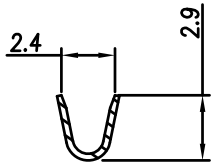

SECTION A-A

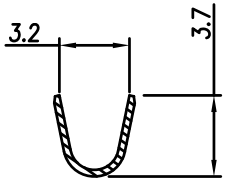

SECTION B-B

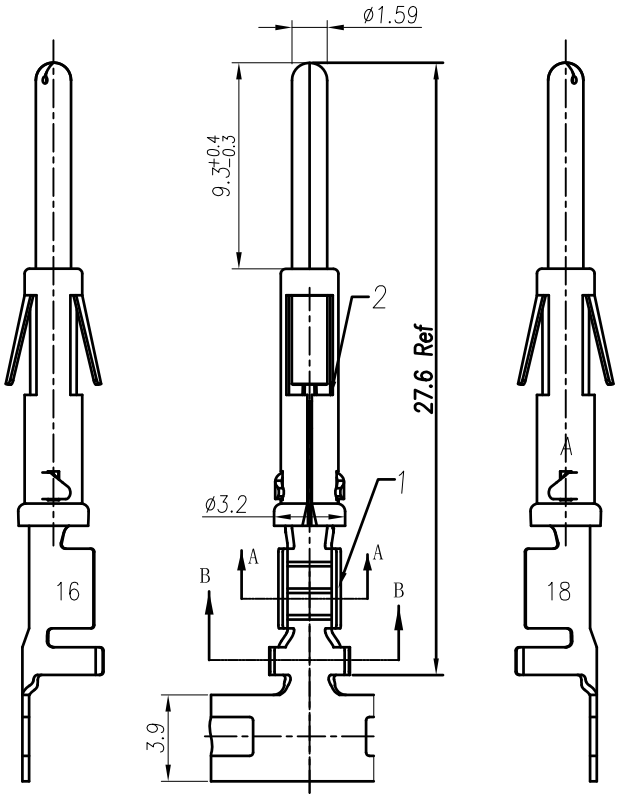

General specfication:
1. Suitable pin diameter:1.6mm
2. Current rating:13A
3. Termination type:crimp
4. Crimp wire range:AWG 16~18
5. Plating Specification:See Below
   5.1. When XX=T Tin over Nickel
   5.2. When XX=F Gold flash plate overall.
   5.3. WhenXX=G10 Contact plating 10u"Gold.
   5.4. WhenXX=G30 Contact plating 30u"Gold.
6. Material Specification:See Below
   6.1. Contact Body:Copper Alloy
   6.2. Outer Spring:Stainless Steel
7. Mechanical properties
   7.1. Contact retention in body:110N min
   7.2. Individual insertion force 3~8N(GJB1216-91)
   7.3. Individual withdrawal force 1~4N(GJB1216-91)

UNLESS OTHERWISE SPECIFIED
1) All dimensions are in metric(mm).
2) Tolerances are as follows:
1 PL DEC ±0.30
2 PL DEC ±0.15 Fractions ±1/64
3 PL DEC ±0.10 Angles ±1°

签 名 SIGNATURE		日期 DATE
制 图 DRAWN	TOM	23-AUG-11
审 核 CHECKED	LINDA	23-AUG-11
工 艺 ENGINEER	ENGINEER	DENR
批 准 APPROVAL	LINDA	23-AUG-11
客 户 CUSTOMER	CUSTOMER	

MATERIAL SPECIFICATIONS:

PROCESS SPECIFICATIONS:

THIS DRAWING IS SUPPLIED FOR INFORMATION ONLY. DESIGN FEATURES, SPECIFICATIONS AND PERFORMANCE DATA SHOWN HEREON ARE THE PROPERTY OF THE AMPHENOL CORPORATION. NO RIGHTS OF REPRODUCTION ARE IMPLIED. ALL DIMENSIONS ARE SUBJECT TO NORMAL MANUFACTURING VARIATIONS.

SINE Systems Corporation
A Subsidiary of Amphenol Corporation

Pin Contact ,stamped,16~18AWG,Size 16

DWG NO: SP16M1XX

第三角投影 THIRD ANGLE PROJECTION	文件编号 FSCM NO.	幅 面 SIZE	质 量 MASS	版次 REV.	比 例 SCALE
		A4	MASS	03	SCALEINF

SHEET SHT OF SHTS NEXT ASS'Y: NXT_ASSY

AMEYA360
Components Supply Platform

Authorized Distribution Brand :

Website :

Welcome to visit www.ameya360.com

Contact Us :

- ### Address :

  401 Building No.5, JiuGe Business Center, Lane 2301, Yishan Rd
  Minhang District, Shanghai , China

- ### Sales :

  Direct +86 (21) 6401-6692

  Email amall@ameya360.com

  QQ 800077892

  Skype ameyasales1 ameyasales2

- ### Customer Service :

  Email service@ameya360.com

- ### Partnership :

  Tel +86 (21) 64016692-8333

  Email mkt@ameya360.com