DATE	DESCRIPTION	REV.
7.26.99	CHANGE AS PER ECN 99-053	A
6.7.05	CHANGE AS PER ECN 05-030	B

Notes:

Shell: Mat'l: Phosphor Bronze,
Finish: Tin Plate over Nickel Plate.

Insulator: Mat'l: Thermoplastic UL 94V-0

Contacts: Mat'l: Phosphor Bronze
Finish: Gold Plate over Nickel Plate on Contact Area.
Tin Plate over Nickel Plate on Solder Tail.

Electrical Specifications

Rated Voltage:
30V AC (rms)

Contact Current Rating:
1A Max.

Contact Resistance:
30 milliohms Max.

Insulation Resistance:
1000 Megohms Min.

Dielectric Withstanding:
750V AC

Operating Temperature:
32° [0°C] to 104° [40°C]

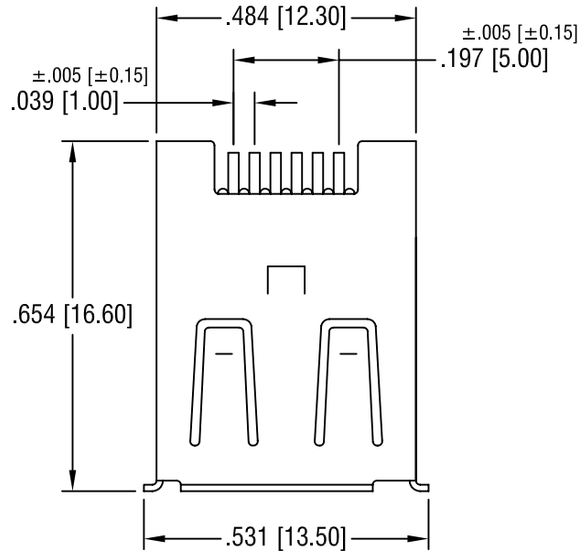

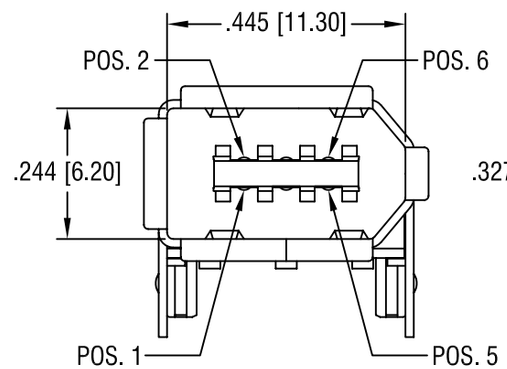

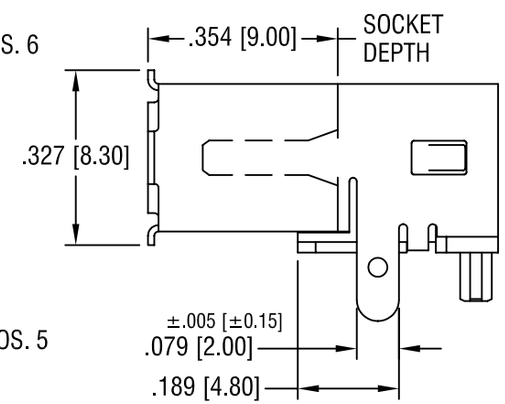

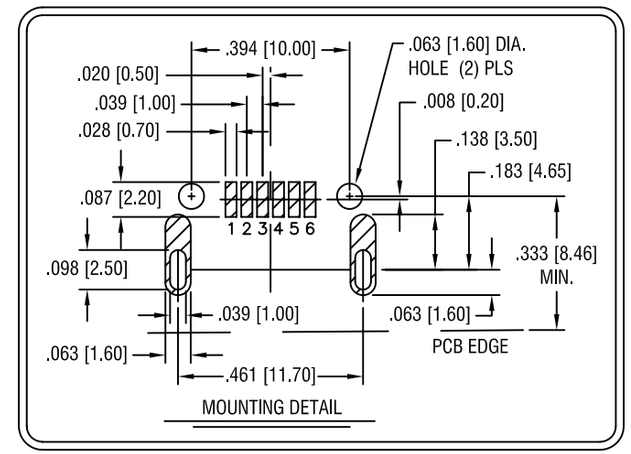

KEYSTONE ELECTRONICS CORP.
ASTORIA, N.Y. 11105-2017

PART NAME
IEEE 1394 'FIREWIRE' SM HORIZONTAL SOCKET

MATERIAL
AS NOTED

FINISH
AS NOTED

DRN BY BOONE
DATE 5.22.98
APP'D LN
SCALE 3X

TOLERANCES INCH [MM]
DECIMAL ± .010 [± 0.25]
ANGULAR ± 1°
UNLESS OTHERWISE SPECIFIED

CODE C/M

DWG NO. 927

THIS DOCUMENT IS THE PROPERTY OF KEYSTONE ELECTRONICS CORP. AND SHALL NOT BE REPRODUCED, DISTRIBUTED OR USED AS A BASIS FOR MANUFACTURE WITHOUT PRIOR WRITTEN PERMISSION FROM KEYSTONE ELECTRONICS CORP.

AMEYA360
Components Supply Platform

Authorized Distribution Brand :

Website :

Welcome to visit www.ameya360.com

Contact Us :

- ### Address :

  401 Building No.5, JiuGe Business Center, Lane 2301, Yishan Rd
  Minhang District, Shanghai , China

- ### Sales :

  Direct +86 (21) 6401-6692

  Email amall@ameya360.com

  QQ 800077892

  Skype ameyasales1 ameyasales2

- ### Customer Service :

  Email service@ameya360.com

- ### Partnership :

  Tel +86 (21) 64016692-8333

  Email mkt@ameya360.com