THIS DOCUMENT IS THE PROPERTY OF KEYSTONE ELECTRONICS CORP. AND SHALL NOT BE REPRODUCED, DISTRIBUTED OR USED AS A BASIS FOR MANUFACTURE WITHOUT PRIOR WRITTEN PERMISSION FROM KEYSTONE ELECTRONICS CORP.

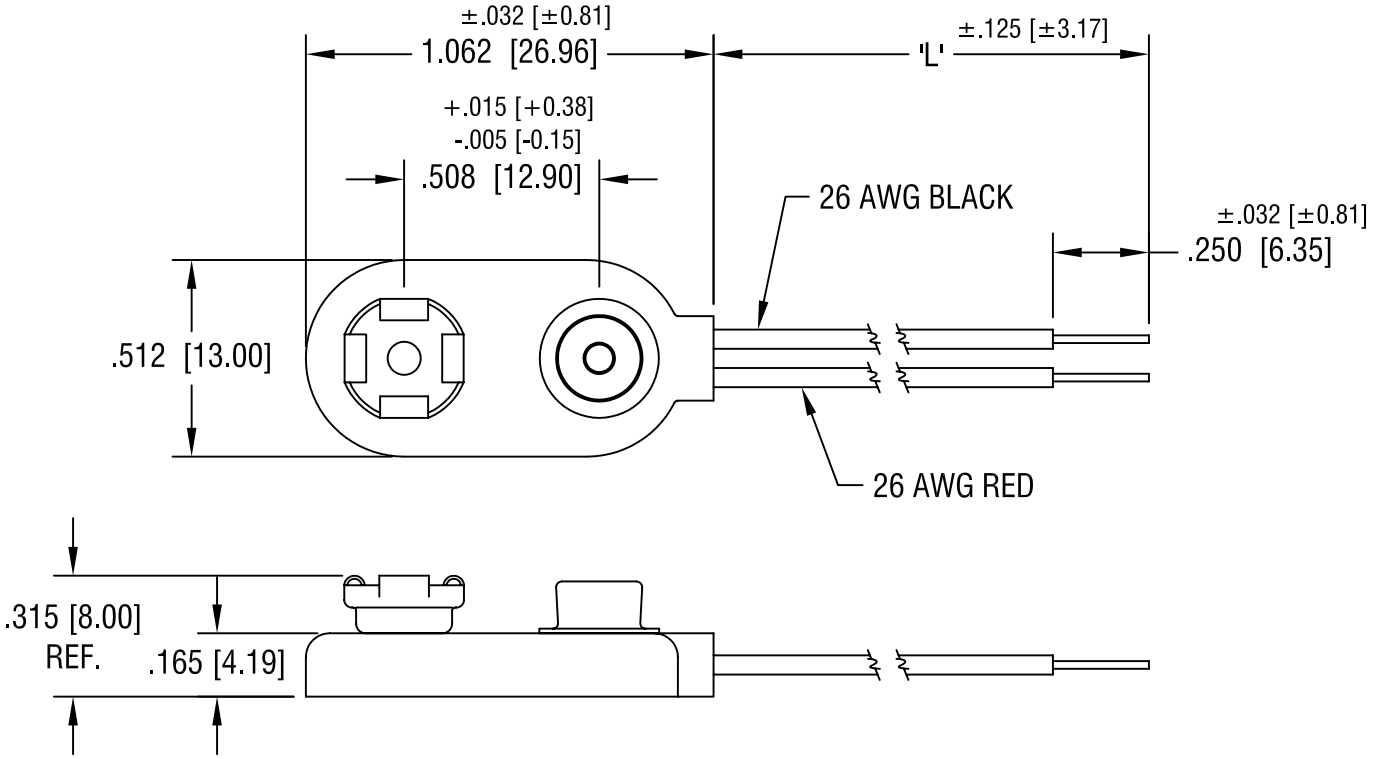


| PART NO. | 'L' DIM. |
|---|---|
| 2238 | 4.000 [101.60] |
| 2239 | 6.000 [152.40] |
| 2240 | 8.000 [203.20] |

NOTE:

1. MAT'L - WIRE: 26 AWG, 1007 UL/CSA APPROVED
   CONTACTS: PHOSPHOR BRONZE, NICKEL PLATE
   BODY: MOLDED POLYETHYLENE
   RED WIRE CONNECTED TO FEMALE CONTACT;
   BLACK WIRE CONNECTED TO MALE CONTACT.

| DATE | DESCRIPTION | REV. |
|---|---|---|
| 3.10.05 | CHANGE AS PER ECN 05–016 | A |

**KEYSTONE ELECTRONICS CORP.**
ASTORIA, N.Y. 11105-2017

PART NAME: PREMIUM '9' VOLT 'I' STYLE BATTERY STRAP

MATERIAL: AS NOTED

FINISH: AS NOTED

DRN BY: BOONE | DATE: 8.8.95

APP'D: LN | SCALE: 2X

TOLERANCES INCH [MM]
DECIMAL ± .020 [± 0.50 ]
ANGULAR ± 1°
UNLESS OTHERWISE SPECIFIED

CODE: C/M

DWG NO. 2238-2240

# AMEYA360
Components Supply Platform

## Authorized Distribution Brand :

## Website :

Welcome to visit www.ameya360.com

## Contact Us :

- ### Address :

  401 Building No.5, JiuGe Business Center, Lane 2301, Yishan Rd
  Minhang District, Shanghai , China

- ### Sales :

  Direct +86 (21) 6401-6692

  Email amall@ameya360.com

  QQ 800077892

  Skype ameyasales1 ameyasales2

- ### Customer Service :

  Email service@ameya360.com

- ### Partnership :

  Tel +86 (21) 64016692-8333

  Email mkt@ameya360.com