DWG. NO.	SYM.
SJ021041-E	1

SYM.	DCN NO.	DESCRIPTION	DATE	DRAWN	CHECKED	APP'D	APP'D

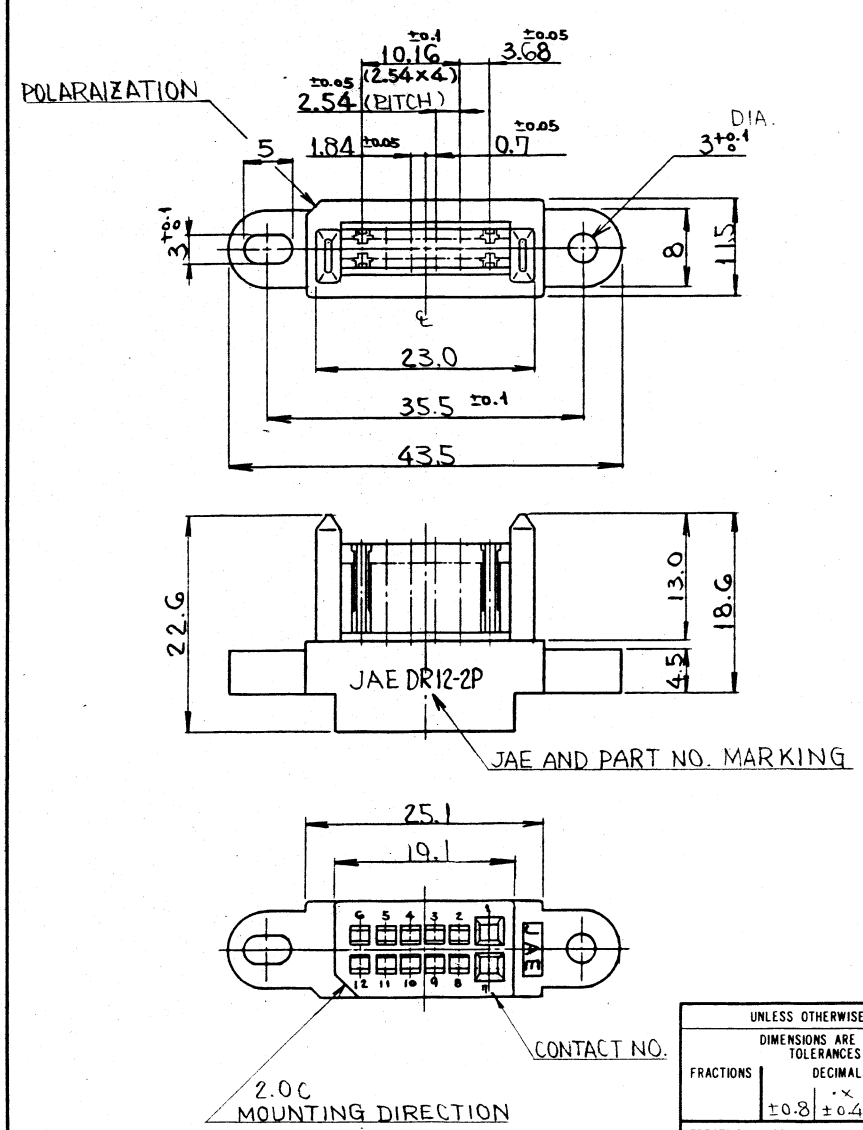

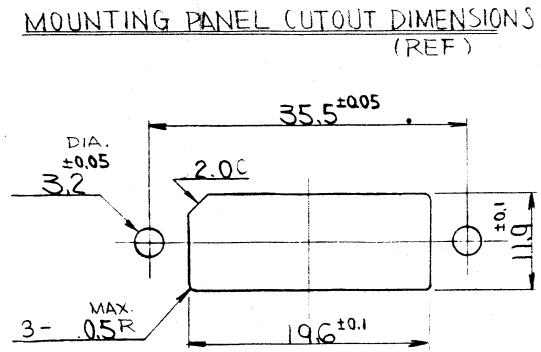

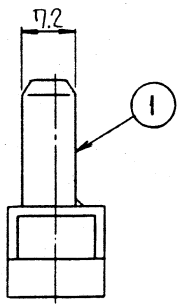

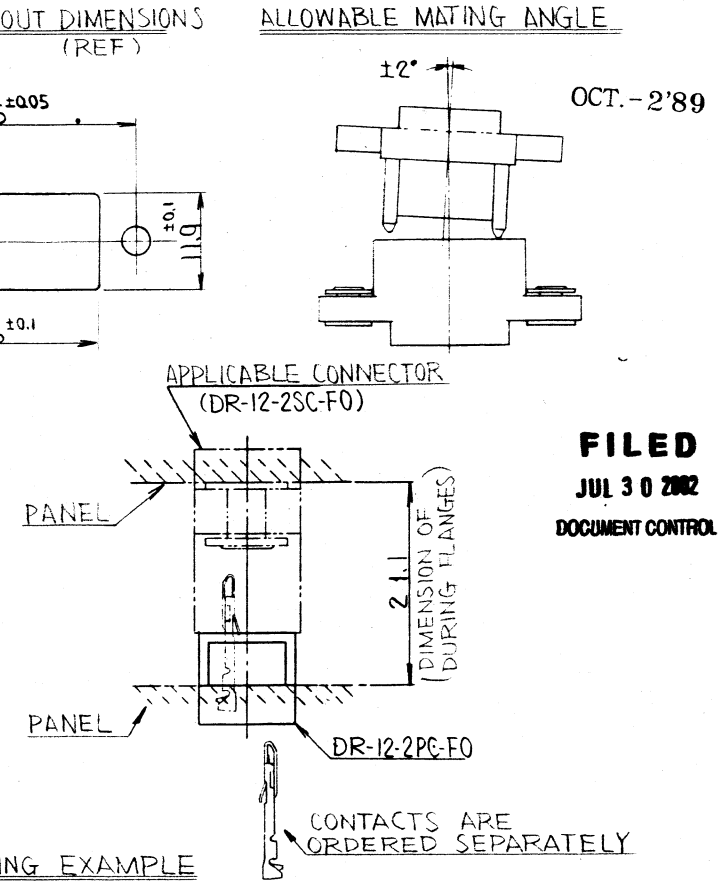

MATING EXAMPLE

FILED
JUL 30 2002
DOCUMENT CONTROL

ITEM	DESCRIPTION	Q'TY	MATERIAL	FINISH	REMARK
1	INSULATOR	1	GLASS FILLED PBT	———	94V-0 COLOR:BLACK

UNLESS OTHERWISE SPECIFIED
DIMENSIONS ARE IN INCHES
TOLERANCES ON:

FRACTIONS	DECIMALS			ANGLES
	±0.8	.x ±0.4	.xx ±0.1	3rd

TREATMENT OR FINISH

DATE MAY. 7 1987
DRAWN
CHECKED Y. HAYASHI
APP'D Y. Takeuchi
APP'D S. Idushimoto

TITLE
DR-12-2PC-F0

JAPAN AVIATION ELECTRONICS
IND. CO. LTD.
FACTORY
NAKAGAMI-CHO, AKISHIMA-SHI
TOKYO, JAPAN

DWG. NO. SJ021041-E

SCALE x 2 | DWG. SIZE B | WT. | SHEET

AMEYA360
Components Supply Platform

Authorized Distribution Brand :

Website :

Welcome to visit www.ameya360.com

Contact Us :

- ### Address :

  401 Building No.5, JiuGe Business Center, Lane 2301, Yishan Rd
  Minhang District, Shanghai , China

- ### Sales :

  Direct +86 (21) 6401-6692

  Email amall@ameya360.com

  QQ 800077892

  Skype ameyasales1 ameyasales2

- ### Customer Service :

  Email service@ameya360.com

- ### Partnership :

  Tel +86 (21) 64016692-8333

  Email mkt@ameya360.com