8-Bit A/D Converter

AD673

FEATURES

Complete 8-Bit A/D Converter with Reference, Clock and Comparator
30 μs Maximum Conversion Time
Full 8- or 16-Bit Microprocessor Bus Interface
Unipolar and Bipolar Inputs
No Missing Codes Over Temperature
Operates on +5 V and –12 V to –15 V Supplies
MIL-STD-883 Compliant Version Available

FUNCTIONAL BLOCK DIAGRAM

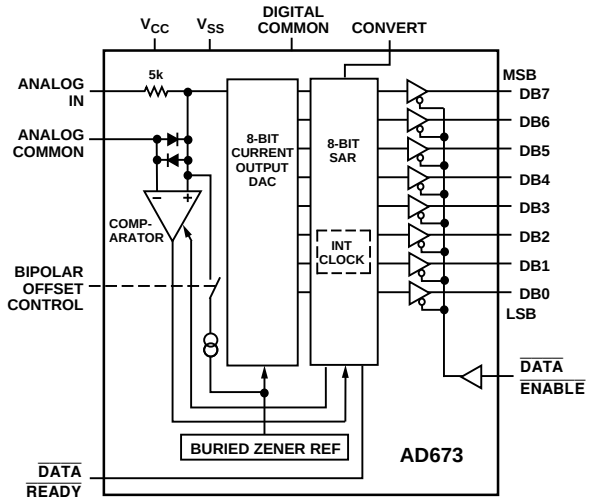

GENERAL DESCRIPTION

The AD673 is a complete 8-bit successive approximation analog-to-digital converter consisting of a DAC, voltage reference, clock, comparator, successive approximation register (SAR) and 3-state output buffers—all fabricated on a single chip. No external components are required to perform a full accuracy 8-bit conversion in 20 μs.

The AD673 incorporates advanced integrated circuit design and processing technologies. The successive approximation function is implemented with I^2L (integrated injection logic). Laser trimming of the high stability SiCr thin-film resistor ladder network insures high accuracy, which is maintained with a temperature compensated sub-surface Zener reference.

Operating on supplies of +5 V and –12 V to –15 V, the AD673 will accept analog inputs of 0 V to +10 V or –5 V to +5 V. The trailing edge of a positive pulse on the CONVERT line initiates the 20 μs conversion cycle. $\overline{\text{DATA READY}}$ indicates completion of the conversion.

The AD673 is available in two versions. The AD673J as specified over the 0°C to +70°C temperature range and the AD673S guarantees ±1/2 LSB relative accuracy and no missing codes from –55°C to +125°C.

Two package configurations are offered. All versions are also offered in a 20-pin hermetically sealed ceramic DIP. The AD673J is also available in a 20-pin plastic DIP.

PRODUCT HIGHLIGHTS

1. The AD673 is a complete 8-bit A/D converter. No external components are required to perform a conversion.
2. The AD673 interfaces to many popular microprocessors without external buffers or peripheral interface adapters.
3. The device offers true 8-bit accuracy and exhibits no missing codes over its entire operating temperature range.
4. The AD673 adapts to either unipolar (0 V to +10 V) or bipolar (–5 V to +5 V) analog inputs by simply grounding or opening a single pin.
5. Performance is guaranteed with +5 V and –12 V or –15 V supplies.
6. The AD673 is available in a version compliant with MIL-STD-883. Refer to the Analog Devices Military Products Databook or current AD673/883B data sheet for detailed specifications.

REV. A

Information furnished by Analog Devices is believed to be accurate and reliable. However, no responsibility is assumed by Analog Devices for its use, nor for any infringements of patents or other rights of third parties which may result from its use. No license is granted by implication or otherwise under any patent or patent rights of Analog Devices.

One Technology Way, P.O. Box 9106, Norwood, MA 02062-9106, U.S.A.
Tel: 617/329-4700 **Fax: 617/326-8703**

AD673–SPECIFICATIONS

(T_A = +25°C, V+ = +5 V, V– = –12 V or –15 V, all voltages measured with respect to digital common, unless otherwise noted)

Model	AD673J Min	AD673J Typ	AD673J Max	AD673S Min	AD673S Typ	AD673S Max	Units
RESOLUTION		8			8		Bits
RELATIVE ACCURACY,[1]			**±1/2**			**±1/2**	LSB
$T_A = T_{MIN}$ to T_{MAX}			**±1/2**			**±1/2**	LSB
FULL-SCALE CALIBRATION[2]		±2			±2		LSB
UNIPOLAR OFFSET			**±1/2**			**±1/2**	LSB
BIPOLAR OFFSET			**±1/2**			**±1/2**	LSB
DIFFERENTIAL NONLINEARITY,[3]	**8**			**8**			Bits
$T_A = T_{MIN}$ to T_{MAX}	**8**			**8**			Bits
TEMPERATURE RANGE	0		+70	–55		+125	°C
TEMPERATURE COEFFICIENTS							
Unipolar Offset			**±1**			**±1**	LSB
Bipolar Offset			**±1**			**±1**	LSB
Full-Scale Calibration[2]			**±2**			**±2**	LSB
POWER SUPPLY REJECTION							
Positive Supply							
+4.5 ≤ V+ ≤ +5.5 V			**±2**			**±2**	LSB
Negative Supply							
–15.75 V ≤ V– ≤ –14.25 V			**±2**			**±2**	LSB
–12.6 V ≤ V– ≤ –11.4 V			**±2**			**±2**	LSB
ANALOG INPUT IMPEDANCE	3.0	5.0	7.0	3.0	5.0	7.0	kΩ
ANALOG INPUT RANGES							
Unipolar	0		+10	0		+10	V
Bipolar	–5		+5	–5		+5	V
OUTPUT CODING							
Unipolar	Positive True Binary			Positive True Binary			
Bipolar	Positive True Offset Binary			Positive True Offset Binary			
LOGIC OUTPUT							
Output Sink Current							
(V_{OUT} = 0.4 V max, T_{MIN} to T_{MAX})	**3.2**			**3.2**			mA
Output Source Current[4]							
(V_{OUT} = 2.4 V min, T_{MIN} to T_{MAX})	**0.5**			**0.5**			mA
Output Leakage			**±40**			**±40**	µA
LOGIC INPUTS							
Input Current			**±100**			**±100**	µA
Logic "1"	**2.0**			**2.0**			V
Logic "0"			**0.8**			**0.8**	V
CONVERSION TIME, T_A and T_{MIN} to T_{MAX}	10	20	**30**	10	20	**30**	µs
POWER SUPPLY							
V+	**+4.5**	+5.0	**+7.0**	**+4.5**	+5.0	**+7.0**	V
V–	–11.4	–15	–16.5	–11.4	–15	**–16.5**	V
OPERATING CURRENT							
V+		15	**20**		15	**20**	mA
V–		9	**15**		9	**15**	mA

NOTES

[1]Relative accuracy is defined as the deviation of the code transition points from the ideal transfer point on a straight line from the zero to the full scale of the device.

[2]Full-scale calibration is guaranteed trimmable to zero with an external 200 Ω potentiometer in place of the 15 Ω fixed resistor.
Full scale is defined as 10 volts minus 1 LSB, or 9.961 V.

[3]Defined as the resolution for which no missing codes will occur.

[4]The data output lines have active pull-ups to source 0 5 mA. The $\overline{\text{DATA}}$ $\overline{\text{READY}}$ line is open collector with a nominal 6 kΩ internal pull-up resistor.

Specifications subject to change without notice.

Specifications shown in **boldface** are tested on all production units at final electrical test. Results from those tests are used to calculate outgoing quality levels. All min and max specifications are guaranteed, although only those shown in boldface are tested on all production units.

ABSOLUTE MAXIMUM RATINGS

V+ to Digital Common . . . . . 0 V to +7 V
V– to Digital Common . . . . . 0 V to –16.5 V
Analog Common to Digital Common . . . . . ±1 V
Analog Input to Analog Common . . . . . ±15 V
Control Inputs . . . . . 0 V to V+
Digital Outputs (High Impedance State) . . . . . 0 V to V+
Power Dissipation . . . . . 800 mW

ORDERING GUIDE

Model	Temperature Range	Relative Accuracy	Package Option[1]
AD673JN	0°C to +70°C	±1/2 LSB max	Plastic DIP (N-20)
AD673JD	0°C to +70°C	±1/2 LSB max	Ceramic DIP (D-20)
AD673SD[2]	–55°C to +125°C	±1/2 LSB max	Ceramic DIP (D-20)
AD673JP	0°C to +70°C	±1/2 LSB max	PLCC (P-20A)

NOTES
[1]D = Ceramic DIP; N = Plastic DIP; P = Plastic Leaded Chip Carrier.
[2]For details on grade and package offering screened in accordance with MIL-STD-883, refer to the Analog Devices Military Products Databook .

FUNCTIONAL DESCRIPTION

A block diagram of the AD673 is shown in Figure 1. The positive CONVERT pulse must be at least 500 ns wide. $\overline{\text{DR}}$ goes high within 1.5 µs after the leading edge of the convert pulse indicating that the internal logic has been reset. The negative edge of the CONVERT pulse initiates the conversion. The internal 8-bit current output DAC is sequenced by the integrated injection logic (I^2L) successive approximation register (SAR) from its most significant bit to least significant bit to provide an output current which accurately balances the input signal current through the 5 kΩ resistor. The comparator determines whether the addition of each successively weighted bit current causes the DAC current sum to be greater or less than the input current; if the sum is more, the bit is turned off. After testing all bits, the SAR contains a 8-bit binary code which accurately represents the input signal to within (0.05% of full scale).

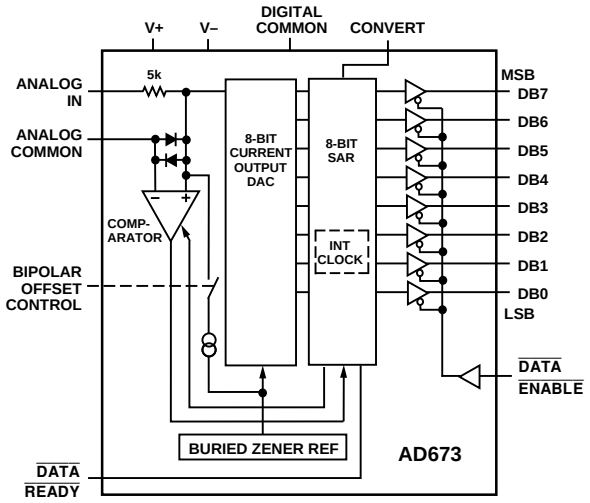

Figure 1. AD673 Functional Block Diagram

The SAR drives $\overline{\text{DR}}$ low to indicate that the conversion is complete and that the data is available to the output buffers. $\overline{\text{DATA ENABLE}}$ can then be activated to enable the 8-bits of data desired. $\overline{\text{DATA ENABLE}}$ should be brought high prior to the next conversion to place the output buffers in the high impedance state.

The temperature compensated buried Zener reference provides the primary voltage reference to the DAC and ensures excellent stability with both time and temperature. The bipolar offset input controls a switch which allows the positive bipolar offset current (exactly equal to the value of the MSB less 1/2 LSB) to be injected into the summing (+) node of the comparator to offset the DAC output. Thus the nominal 0 V to +10 V unipolar input range becomes a –5 V to +5 V range. The 5 kΩ thin-film input resistor is trimmed so that with a full-scale input signal, an input current will be generated which exactly matches the DAC output with all bits on.

UNIPOLAR CONNECTION

The AD673 contains all the active components required to perform a complete A/D conversion. Thus, for many applications, all that is necessary is connection of the power supplies (+5 V and –12 V to –15 V), the analog input and the convert pulse. However, there are some features and special connections which should be considered for achieving optimum performance. The functional pinout is shown in Figure 2.

The standard unipolar 0 V to +10 V range is obtained by shorting the bipolar offset control pin (Pin 16) to digital common (Pin 17).

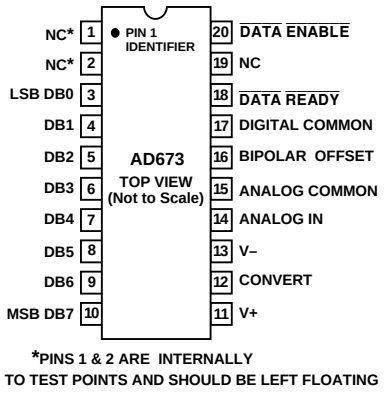

Figure 2. AD673 Pin Connections

Full-Scale Calibration

The 5 kΩ thin-film input resistor is laser trimmed to produce a current which matches the full-scale current of the internal DAC-plus about 0.3%—when an analog input voltage of 9.961 volts (10 volts – 1 LSB) is applied at the input. The input resistor is trimmed in this way so that if a fine trimming potentiometer is inserted in series with the input signal, the input current at the full scale input voltage can be trimmed down to match the DAC full-scale current as precisely as desired. However, for many applications the nominal 9.961 volt full scale can be achieved to sufficient accuracy by simply inserting a 15 Ω resistor in series with the analog input to Pin 14. Typical full-scale calibration error will then be within ±2 LSB or ±0.8%. If more precise calibration is desired, a 200 Ω trimmer should be used instead. Set the analog input at 9.961 volts, and set the trimmer so that the output code is just at the transition between 111111 10 and 11111111. Each LSB will then have a weight of 39.06 mV. If a nominal full scale of 10.24 volts is desired (which makes the LSB have a weight of exactly 40.0 mV), a 100 Ω resistor and a 100 Ω trimmer (or a 200 Ω trimmer with good resolution) should be used. Of course, larger full-scale ranges can be arranged by using a larger input resistor, but linearity and full-scale temperature coefficient may be compromised if the external resistor becomes a sizeable percentage of 5 kΩ Figure 3 illustrates the connections required for full-scale calibration.

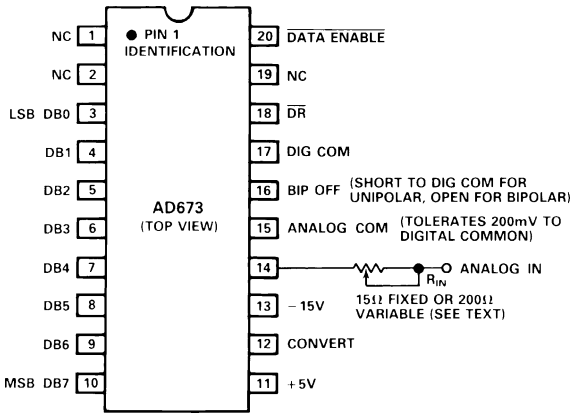

Figure 3. Standard AD673 Connections

Unipolar Offset Calibration

Since the Unipolar Offset is less than ±1/2 LSB for all versions of the AD673, most applications will not require trimming. Figure 4 illustrates two trimming methods which can be used if greater accuracy is necessary.

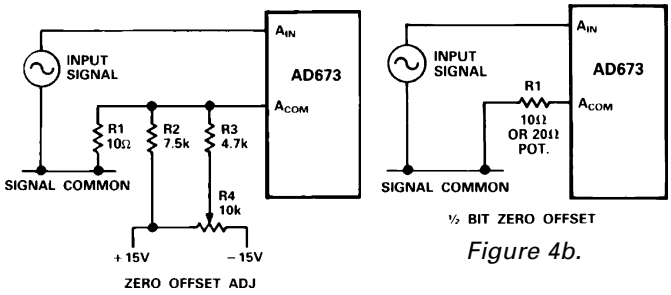

Figure 4a.

Figure 4b.

Figure 4. Unipolar Offset Trimming

Figure 4a shows how the converter zero may be offset to correct for initial offset and/or input signal offsets. As shown, the circuit gives approximately symmetrical adjustment in unipolar mode.

Figure 5 shows the nominal transfer curve near zero for an AD673 in unipolar mode. The code transitions are at the edges of the nominal bit weights. In some applications it will be preferable to offset the code transitions so that they fall between the nominal bit weights, as shown in the offset characteristics.

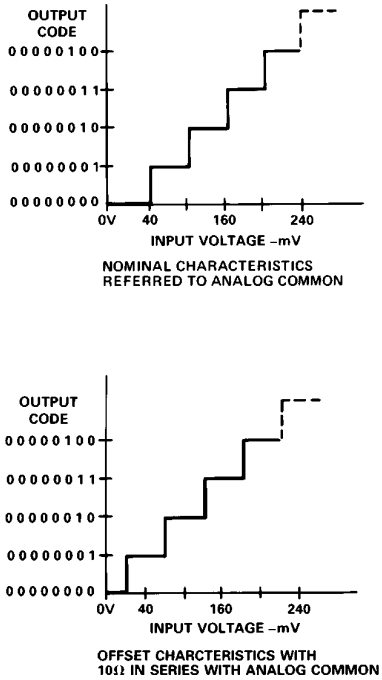

Figure 5. AD673 Transfer Curve—Unipolar Operation (Approximate Bit Weights Shown for Illustration, Nominal Bit Weights % 39.06 mV)

This offset can easily be accomplished as shown in Figure 4b. At balance (after a conversion) approximately 2 mA flows into the Analog Common terminal. A 10 Ω resistor in series with this terminal will result in approximately the desired l/2 bit offset of the transfer characteristics. The nominal 2 mA Analog Common current is not closely controlled in manufacture. If high accuracy is required, a 20 Ω potentiometer (connected as a rheostat) can be used as R1. Additional negative offset range may be obtained by using larger values of R1. Of course, if the zero transition point is changed, the full-scale transition point will also move. Thus, if an offset of 1/2 LSB is introduced, full scale trimming as described on the previous page should be done with an analog input of 9.941 volts.

NOTE: During a conversion, transient currents from the Analog Common terminal will disturb the offset voltage. Capacitive decoupling should not be used around the offset network. These transients will settle appropriately during a conversion. Capacitive decoupling will "pump up" and fail to settle resulting in conversion errors. Power supply decoupling, which returns to analog signal common, should go to the signal input side of the resistive offset network.

BIPOLAR CONNECTION

To obtain the bipolar –5 V to +5 V range with an offset binary output code, the bipolar offset control pin is left open.

A –5.00 volt signal will give a 8-bit code of 00000000; an input of 0.00 volts results in an output code of 10000000 and +4.961 volts at the input yields the 11111111 code. The nominal transfer curve is shown in Figure 6.

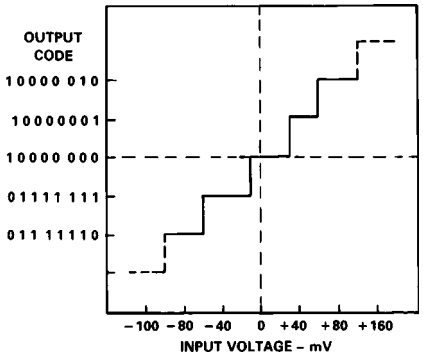

Figure 6. AD673 Transfer Curve—Bipolar Operation

Note that in the bipolar mode, the code transitions are offset 1/4 LSB such that an input voltage of 0 volts –5 mV to +35 mV yields the code representing zero (10000000). Each output code is then *centered* on its nominal input voltage.

Full-Scale Calibration

Full-Scale Calibration is accomplished in the same manner as in Unipolar operation except the full-scale input voltage is +4.61 volts.

Negative Full-Scale Calibration

The circuit in Figure 4a can also be used in Bipolar operation to offset the input voltage (nominally –5 V) which results in the 000000 00 code. R2 should be omitted to obtain a symmetrical range.

The bipolar offset control input is not directly TTL compatible but a TTL interface for logic control can be constructed as shown in Figure 7.

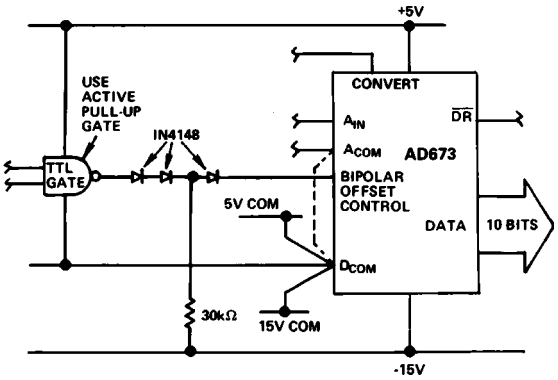

Figure 7. Bipolar Offset Controlled by Logic Gate
Gate Output = 1 Unipolar 0 V–10 V Input Range
Gate Output = 0 Bipolar ±5 V Input Range

SAMPLE-HOLD AMPLIFIER CONNECTION TO THE AD673

Many situations in high-speed acquisition systems or digitizing rapidly changing signals require a sample-hold amplifier (SHA) in front of the A-D converter. The SHA can acquire and hold a signal faster than the converter can perform a conversion. A SHA can also be used to accurately define the exact point in time at which the signal is sampled. For the AD673, a SHA can also serve as a high input impedance buffer.

Figure 8 shows the AD673 connected to the AD582 monolithic SHA for high speed signal acquisition. In this configuration, the AD582 will acquire a 10 volt signal in less than 10 µs with a droop rate less than 100 µV/ms.

$\overline{DR}$ goes high after the conversion is initiated to indicate that reset of the SAR is complete. In Figure 8 it is also used to put the AD582 into the hold mode while the AD673 begins its conversion cycle. (The AD582 settles to final value well in advance of the first comparator decision inside the AD673).

$\overline{DR}$ goes low when the conversion is complete placing the AD582 back in the sample mode. Configured as shown in Figure 8, the next conversion can be initiated after a 10 µs delay to allow for signal acquisition by the AD582.

Observe carefully the ground, supply, and bypass capacitor connections between the two devices. This will minimize ground noise and interference during the conversion cycle.

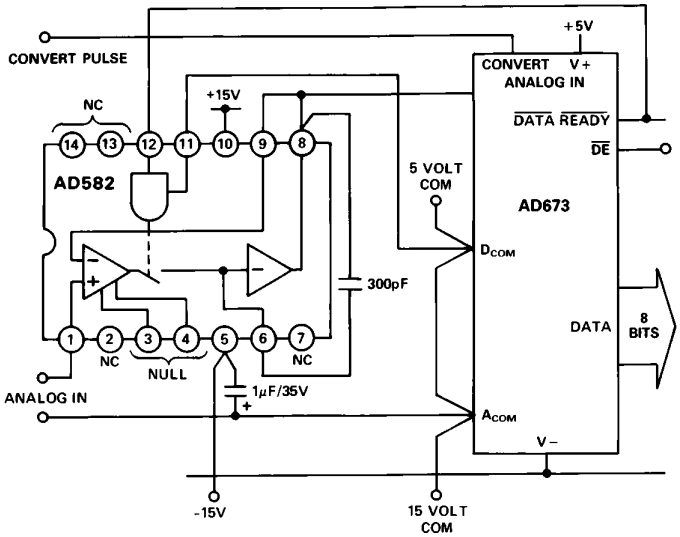

Figure 8. Sample-Hold Interface to the AD673

GROUNDING CONSIDERATIONS

The AD673 provides separate Analog and Digital Common connections. The circuit will operate properly with as much as ±200 mV of common-mode voltage between the two commons. This permits more flexible control of system common bussing and digital and analog returns.

In normal operation, the Analog Common terminal may generate transient currents of up to 2 mA during a conversion. In addition a static current of about 2 mA will flow into Analog Common in the unipolar mode after a conversion is complete. The Analog Common current will be modulated by the variations in input signal.

The absolute maximum voltage rating between the two commons is ±1 volt. It is recommended that a parallel pair of back-to-back protection diodes be connected between the commons if they are not connected locally.

CONTROL AND TIMING OF THE AD673

The operation of the AD673 is controlled by two inputs: CONVERT and $\overline{\text{DATA ENABLE}}$.

Starting a Conversion

The conversion cycle is initiated by a positive-going CONVERT pulse at least 500 ns wide. The rising edge of this pulse resets the internal logic, clears the result of the previous conversion, and sets $\overline{\text{DR}}$ high. The falling edge of CONVERT begins the conversion cycle. When conversion is completed $\overline{\text{DR}}$ returns low. During the conversion cycle, $\overline{\text{DE}}$ should be held high. If $\overline{\text{DE}}$ goes low during a conversion, the data output buffers will be enabled and intermediate conversion results will be present on the data output pins. This may cause bus conflicts if other devices in a system are trying to use the bus.

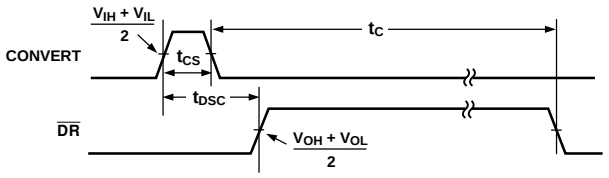

Figure 9. Convert Timing

Reading the Data

The three-state data output buffers is enabled by $\overline{\text{DE}}$. Access time of these buffers is typically 150 ns (250 maximum). The Data outputs remain valid until 50 ns after the enable signal returns high, and are completely into the high-impedance state 100 ns later.

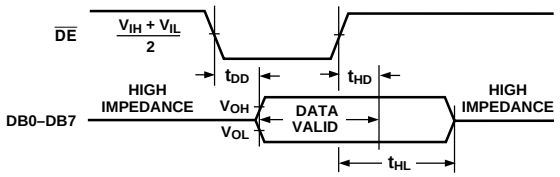

Figure 10. Read Timing

TIMING SPECIFICATIONS

Parameter	Symbol	Min	Typ	Max	Units
CONVERT Pulse Width	t_{CS}	500	—	—	ns
$\overline{\text{DR}}$ Delay from CONVERT	t_{DSC}	—	1	1.5	µs
Conversion Time	t_C	10	20	30	µs
Data Access Time	t_{DD}	0	150	250	ns
Data Valid after $\overline{\text{DE}}$ High	t_{HD}	50	—	—	ns
Output Float Delay	t_{HL}	—	100	200	ns

MICROPROCESSOR INTERFACE CONSIDERATIONS—GENERAL

When an analog-to-digital converter like the AD673 is interfaced to a microprocessor, several details of the interface must be considered. First, a signal to start the converter must be generated; then an appropriate delay period must be allowed to pass before valid conversion data may be read. In most applications, the AD673 can interface to a microprocessor system with little or no external logic.

The most popular control signal configuration consists of decoding the address assigned to the AD673, then gating this signal with the system's WR signal to generate the CONVERT pulse, and gating it with RD to enable the output buffers. The use of a memory address and memory WR and RD signals denotes "memory-mapped" I/O interfacing, while the use of a separate I/O address space denotes "isolated I/O" interfacing.

Figure 11 shows a generalized diagram of the control logic for an AD673 interfaced to an 8-bit data bus, where an address ADC ADDR has been decoded. ADC ADDR starts the converter when written to (the actual data being written to the converter does not matter) and contains the high byte data during read operations.

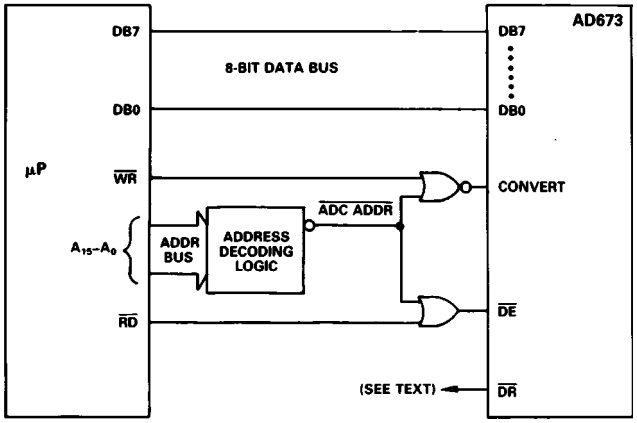

Figure 11. General AD673 Interface to 8-Bit Microprocessor

In systems where this read-write interface is used, at least 30 microseconds (the maximum conversion time) must be allowed to pass between starting a conversion and reading the results. This delay or "time-out" period can be implemented in a short software routine such as a countdown loop, enough dummy instructions to consume 30 microseconds, or enough actual useful instructions to consume the required time. In tightly-timed systems, the $\overline{DR}$ line may be read through an external three-state buffer to determine precisely when a conversion is complete. Higher-speed systems may choose to use $\overline{DR}$ to signal an interrupt to the processor at the end of a conversion.

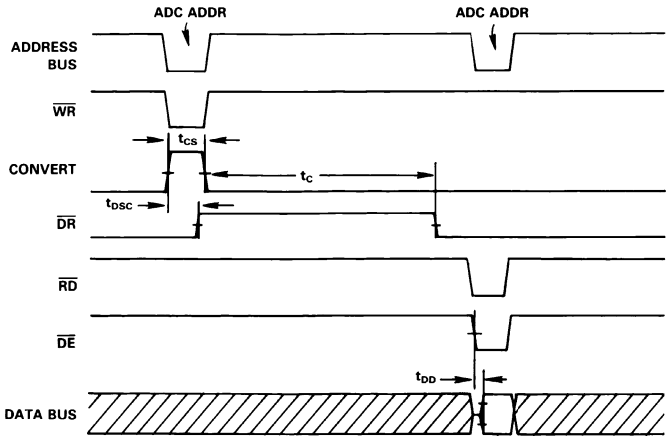

Figure 12. Typical AD673 Timing Diagram

CONVERT Pulse Generation

The AD673 is tested with a CONVERT pulse width of 500 ns and will typically operate with a pulse as short as 300 ns. However, some microprocessors produce active WR pulses which are shorter than this. Either of the circuits shown in Figure 13 can be used to generate an adequate CONVERT pulse for the AD673. In both circuits, the short low-going WR pulse sets the CONVERT line high through a flip-flop. The rising edge of $\overline{DR}$ (which signifies that the internal logic has been reset) resets the flip-flop and brings CONVERT low, which starts the conversion.

Note that t_{DSC} is slightly longer when the result of the previous conversion contains a Logic 1 on the LSB. This means that the actual CONVERT pulse generated by the circuits in Figure 13 will vary slightly in width.

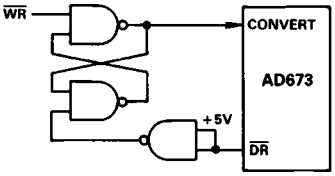

Figure 13a. Using 74LS00

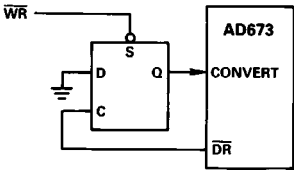

Figure 13b. Using 1/2 74LS74

OUTLINE DIMENSIONS

Dimensions shown in inches and (mm).

20-Pin Ceramic DIP (D-20)

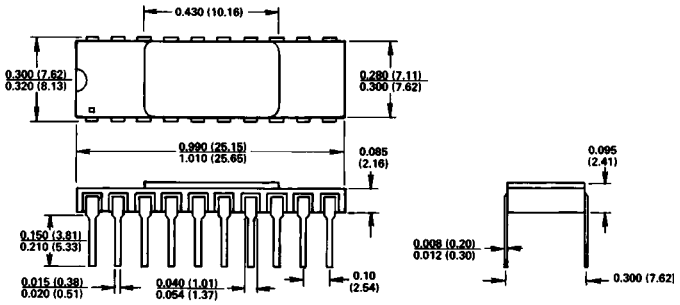

20-Pin Plastic DIP (N-20)

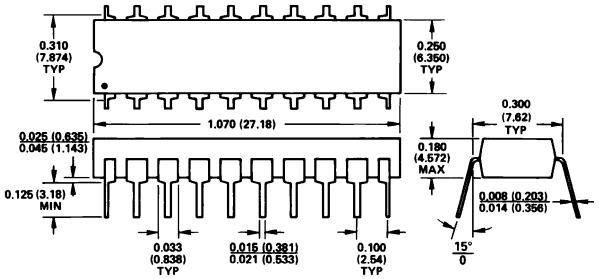

C853c–5–3/87

PRINTED IN U.S.A.

AMEYA360
Components Supply Platform

Authorized Distribution Brand :

Website :

Welcome to visit www.ameya360.com

Contact Us :

- ## Address :

401 Building No.5, JiuGe Business Center, Lane 2301, Yishan Rd
Minhang District, Shanghai , China

- ## Sales :

Direct +86 (21) 6401-6692

Email amall@ameya360.com

QQ 800077892

Skype ameyasales1 ameyasales2

- ## Customer Service :

Email service@ameya360.com

- ## Partnership :

Tel +86 (21) 64016692-8333

Email mkt@ameya360.com