UNCONTROLLED DOCUMENT

PART NUMBER	REV.
LCD–S3X1M60TR–1	A

REV.	E.C.N. NUMBER AND REVISION COMMENTS	DATE
A	E.C.N. #11148.	02.07.07

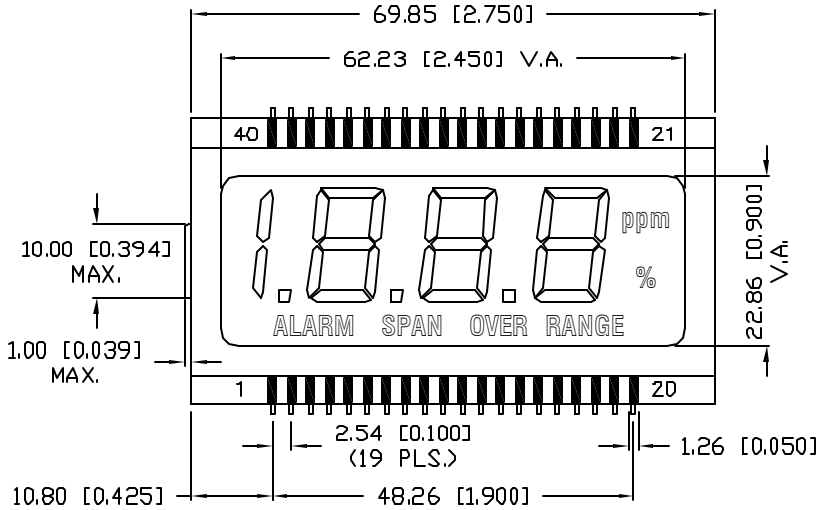

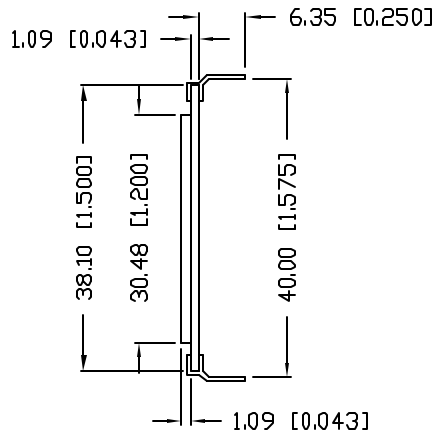

CHARACTERISTICS	
FLUID TYPE:	TN
BACKGROUND COLOR:	GRAY
VIEWING DIRECTION:	12:00
DISPLAY MODE:	REFLECTIVE
OPERATING VOLTAGE:	3.0~5.0V A.C.
OPERATING TEMP.	0°C TO 50°C
STORAGE TEMP.	–20°C TO 70°C
DRIVING METHODE:	STATIC, 1/2 BIAS
CONNECTION TYPE:	40 PINS

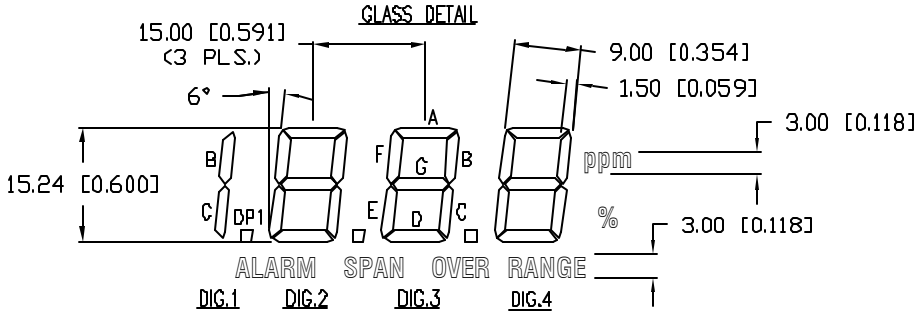

PIN NO.	1	2	3	4	5	6	7	8	9	10
SEGMENT	COM	DP1	ALARM	N/C	2D	2C	DP2	SPAN	N/C	3D
PIN NO.	11	12	13	14	15	16	17	18	19	20
SEGMENT	3C	DP3	OV RG	N/C	N/C	N/C	N/C	4D	4C	%
PIN NO.	21	22	23	24	25	26	27	28	29	30
SEGMENT	ppm	4G	4B	4A	4F	4E	N/C	3G	3B	3A
PIN NO.	31	32	33	34	35	36	37	38	39	40
SEGMENT	3F	3E	N/C	2G	2B	2A	2F	2E	1BC	COM

Pb

UNCONTROLLED DOCUMENT

*UNLESS OTHERWISE SPECIFIED TOLERANCES PER DECIMAL PRECISION ARE: X=±1 (±0.039), X.X=±0.5 (±0.020), X.XX=±0.25 (±0.010), X.XXX=±0.127 (±0.005). LEAD SIZE=±0.05 (±0.002), LEAD LENGTH=±0.75 (±0.030). MIN= +DECIMAL PRECISION −0.00 MAX.= +0.00 −DECIMAL PRECISION

REV.	PART NUMBER
A	LCD–S3X1M60TR–1

0.60" CHARACTER HEIGHT, 3 1/2 DIGIT CUSTOM LCD GLASS, TN, REFLECTIVE, TOP VIEW, 40 PINS.

CONFIDENTIAL INFORMATION
THE INFORMATION CONTAINED IN THIS DOCUMENT IS THE PROPERTY OF LUMEX INC. EXCEPT AS SPECIFICALLY AUTHORIZED IN WRITING BY LUMEX INC., THE HOLDER OF THIS DOCUMENT SHALL KEEP ALL INFORMATION CONTAINED HEREIN CONFIDENTIAL AND SHALL PROTECT SAME IN WHOLE OR IN PART FROM DISCLOSURE AND DISSEMINATION TO ALL THIRD PARTIES.

RELIABILITY NOTE
OUR MANY YEARS OF EXPERIENCE DATA ACCUMULATION INDICATE THAT SOLDER HEAT IS A MAJOR CAUSE OF EARLY AND FUTURE FAILURE. PLEASE PAY ATTENTION TO YOUR SOLDERING PROCESS.

LUMEX
290 E. HELEN ROAD
PALATINE, IL 60067–6976
PHONE: +1.847.359.2790
US WEB: www.lumex.com
TW WEB: www.lumex.com.tw

DRAWN BY:	CHECKED BY:	APPROVED BY:	DATE: 5.11.00
JC			PAGE: 1 OF 1
			SCALE: N/A

AMEYA360
Components Supply Platform

Authorized Distribution Brand :

Website :

Welcome to visit www.ameya360.com

Contact Us :

- **Address :**

  401 Building No.5, JiuGe Business Center, Lane 2301, Yishan Rd
  Minhang District, Shanghai , China

- **Sales :**

  Direct +86 (21) 6401-6692

  Email amall@ameya360.com

  QQ 800077892

  Skype ameyasales1 ameyasales2

- **Customer Service :**

  Email service@ameya360.com

- **Partnership :**

  Tel +86 (21) 64016692-8333

  Email mkt@ameya360.com