PART NAME	DIN RAIL / PANEL MOUNT BOX	PART No.	DB-4715

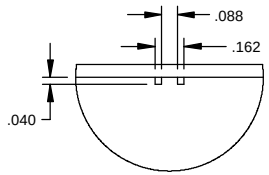

DETAIL B

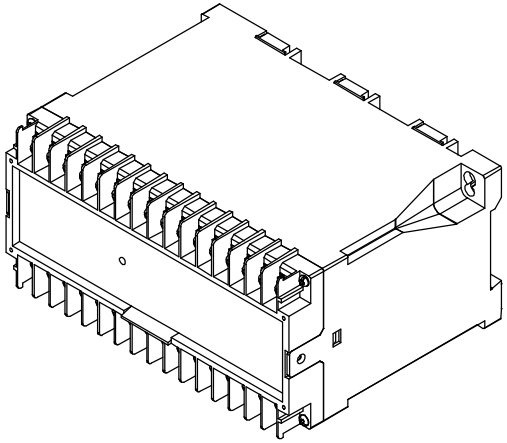

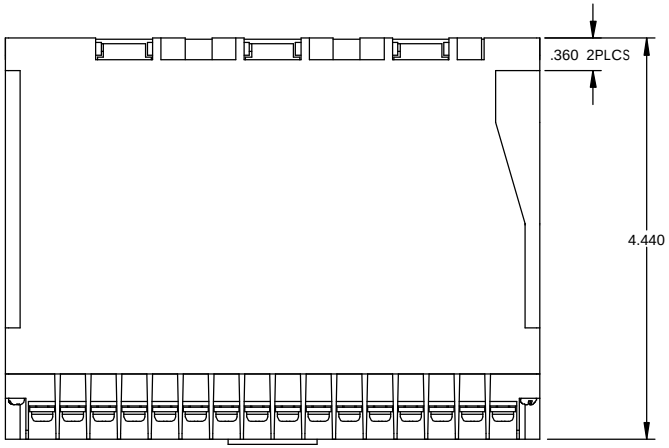

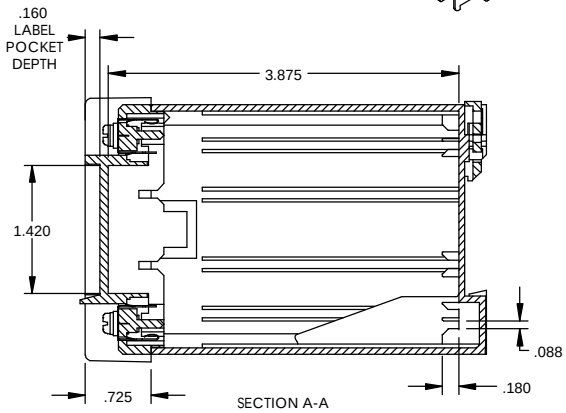

SECTION A-A

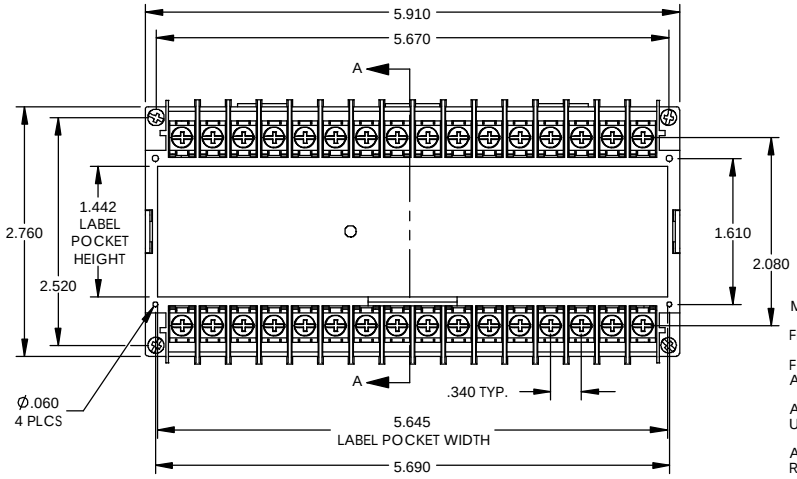

MATERIAL: UL94V-0 RATED ABS

FINISH: LIGHT GRAY

FOUR (4) M3 SCREWS SUPPLIED TO ATTACH FRONT PANEL

ALL DIMENSIONS HAVE A ±.015 TOLERANCE UNLESS OTHERWISE SPECIFIED

ALL CONTACTS ARE TIN PLATED BRASS RATED AT 10 AMPS

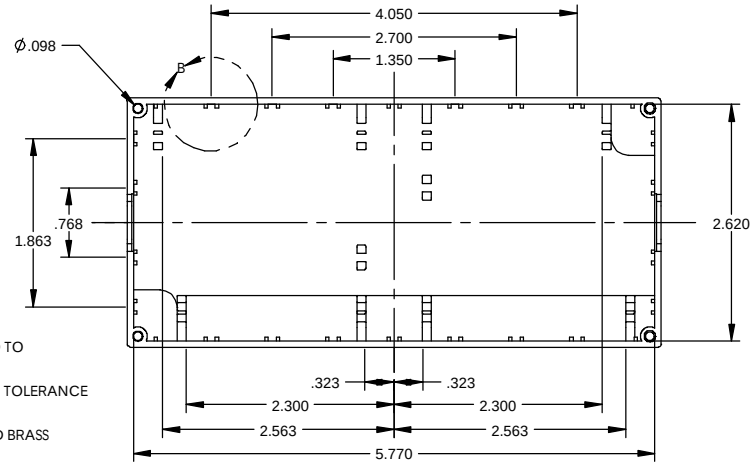

REV: 6/24/04

AMEYA360
Components Supply Platform

Authorized Distribution Brand :

Website :

Welcome to visit www.ameya360.com

Contact Us :

- **Address :**

  401 Building No.5, JiuGe Business Center, Lane 2301, Yishan Rd
  Minhang District, Shanghai , China

- **Sales :**

  Direct +86 (21) 6401-6692

  Email amall@ameya360.com

  QQ 800077892

  Skype ameyasales1 ameyasales2

- **Customer Service :**

  Email service@ameya360.com

- **Partnership :**

  Tel +86 (21) 64016692-8333

  Email mkt@ameya360.com