| PART NAME | SERIES 30 UPRIGHT CABINET RACK | PART No. | 30-2300 TO 30-2306 | REV. DATE | 1-2-02 |
|---|---|---|---|---|---|

FINISH:
FRAME ASSEMBLY, DOOR, SIDES, TOP COWLS & TOP COVER ____ GRAY TEXTURE OR ROYAL BLUE TEXTURE
PANEL MOUNTING RAILS ____ SMOOTH BLACK

MATERIAL:
PANEL MOUNTING RAILS ____ 12 GA. STEEL
FRAME TOP, BASE ASSEMBLY, FILLERS & VERTICAL RAILS ____ 14 GA. STEEL
RAIL SUPPORTS ____ 16 GA. STEEL
TOP COWLS, TOP COVER & SIDES ____ 18 GA. STEEL
DOOR ____ 20 GA. STEEL

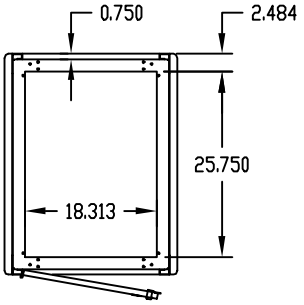


TOP VIEW
(LESS TOP COVER & TOP COWLS)

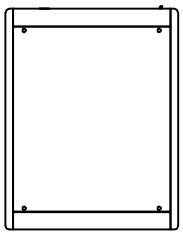

TOP VIEW

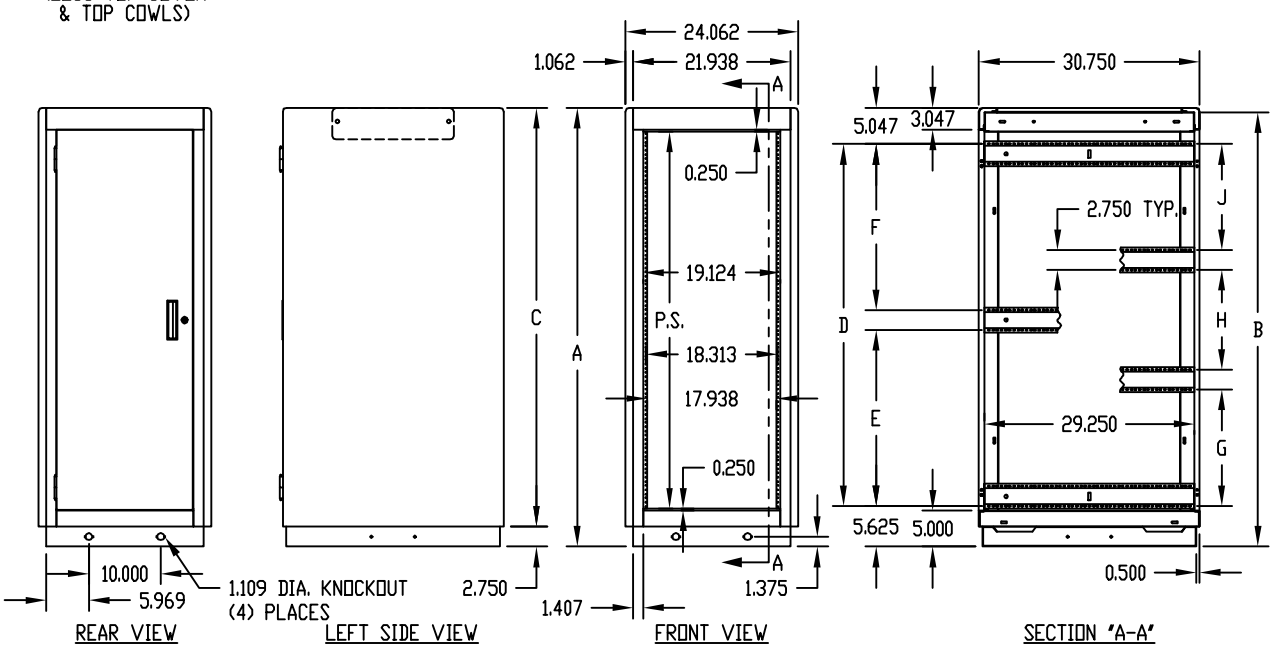


REAR VIEW | LEFT SIDE VIEW | FRONT VIEW | SECTION "A-A"

PANEL MOUNTING RAILS (FRONT & REAR) ARE TAPPED #10-32 ON E.I.A. UNIVERSAL SPACING AND ARE FULLY ADJUSTABLE.

BOTTOM PIERCED FOR MOUNTING RC-7758 CASTERS.

LOAD RATING: 1200 LBS. MAX.

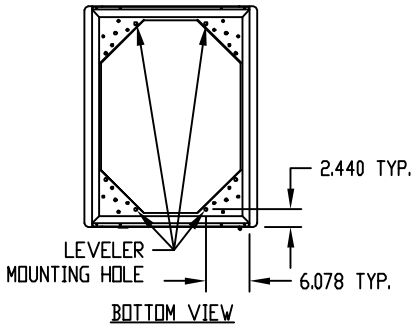


BOTTOM VIEW

| PART No. | P.S. | A | B | C | D | E | F | G | H | J |
|---|---|---|---|---|---|---|---|---|---|---|
| 30-2300 | 21.000 | 29.625 | 29.000 | 26.875 | 18.937 | — | — | — | — | — |
| 30-2301 | 31.500 | 40.125 | 39.500 | 37.375 | 29.437 | — | — | — | — | — |
| 30-2302 | 42.000 | 50.625 | 50.000 | 47.875 | — | 19.281 | 17.906 | — | — | — |
| 30-2303 | 52.500 | 61.125 | 60.500 | 58.375 | — | 24.531 | 23.156 | — | — | — |
| 30-2304 | 61.250 | 69.875 | 69.250 | 67.125 | — | 28.906 | 27.531 | — | — | — |
| 30-2305 | 70.000 | 78.625 | 78.000 | 75.875 | — | 33.281 | 31.906 | — | — | — |
| 30-2306 | 78.750 | 87.375 | 86.750 | 84.625 | — | — | — | 25.125 | 22.312 | 23.750 |

# AMEYA360
Components Supply Platform

## Authorized Distribution Brand :

## Website :

Welcome to visit www.ameya360.com

## Contact Us :


- **Address :**

  401 Building No.5, JiuGe Business Center, Lane 2301, Yishan Rd
  Minhang District, Shanghai , China

- **Sales :**

  Direct +86 (21) 6401-6692

  Email amall@ameya360.com

  QQ 800077892

  Skype ameyasales1 ameyasales2

- **Customer Service :**

  Email service@ameya360.com

- **Partnership :**

  Tel +86 (21) 64016692-8333

  Email mkt@ameya360.com