THESE DRAWINGS AND SPECIFICATIONS ARE THE SOLE PROPERTY OF I/O INTERCONNECT INC., U.S.A. AND SHALL NOT BE REPRODUCED, COPIED, OR USED IN ANY MANNER WITHOUT THE PRIOR WRITTEN CONSENT OF I/O INTERCONNECT INC. OR ITS AFFILIATED SUBSIDIARIES.

| DWG. NO. | ZONE | REV. | DESCRIPTION | DATE | APPROVED |
|---|---|---|---|---|---|
| XX4-52X-D | | X1 | CUSTOMER APPROVAL | 03/26/99 | E.W. |
| | | X2 | ADD RETRACTED LENGTH | 03/29/99 | E.W. |

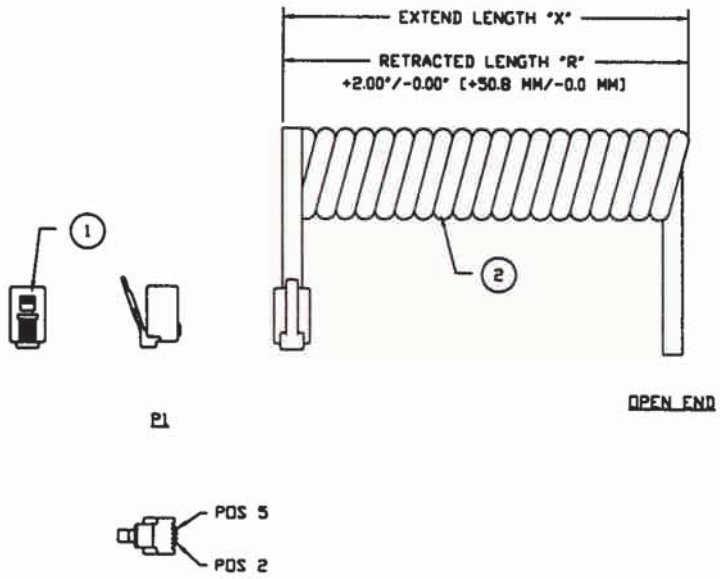


WIRE DIAGRAM

| P1 | OPEN END |
|---|---|
| 2 | BLACK |
| 3 | RED |
| 4 | GREEN |
| 5 | YELLOW |

| 101 PART NUMBER | 101 CABLE PART NUMBER | EXTENDED LENGTH "X" | RETRACTED LENGTH "R" | COLOR |
|---|---|---|---|---|
| 464-144-525-D | 121-410-022 | 14.0 FT [4.3 M] | 34.0 IN [863.6 MM] | WHITE |
| 464-144-524-D | 121-410-012 | 14.0 FT [4.3 M] | 34.0 IN [863.6 MM] | BLACK |
| 464-144-523-D | 121-410-002 | 14.0 FT [4.3 M] | 34.0 IN [863.6 MM] | SILVER SATIN |
| 464-104-522-D | 121-410-021 | 10.0 FT [3.0 M] | 30.0 IN [762.0 MM] | WHITE |
| 464-104-521-D | 121-410-011 | 10.0 FT [3.0 M] | 30.0 IN [762.0 MM] | BLACK |
| 464-104-520-D | 121-410-001 | 10.0 FT [3.0 M] | 30.0 IN [762.0 MM] | SILVER SATIN |
| 464-074-525-D | 121-410-020 | 7.0 FT [2.1 M] | 21.0 IN [533.4 MM] | WHITE |
| 464-074-524-D | 121-410-010 | 7.0 FT [2.1 M] | 21.0 IN [533.4 MM] | BLACK |
| 464-074-523-D | 121-410-000 | 7.0 FT [2.1 M] | 21.0 IN [533.4 MM] | SILVER SATIN |
| 464-054-522-D | 121-410-023 | 5.0 FT [1.5 M] | 17.0 IN [431.8 MM] | WHITE |
| 464-054-521-D | 121-410-013 | 5.0 FT [1.5 M] | 17.0 IN [431.8 MM] | BLACK |
| 464-054-520-D | 121-410-003 | 5.0 FT [1.5 M] | 17.0 IN [431.8 MM] | SILVER SATIN |

TABULATION BLOCK

CUSTOMER APPROVAL
ENGR. SIGN Matt Nemec
DATE: 4-13-99

NOTES: UNLESS OTHERWISE SPECIFIED.

1. TEST CABLE FOR ALL OPENS & SHORTS.
2. PACKAGE CABLE ASSEMBLY INDIVIDUALLY IN PLASTIC BAG. PACKAGE INDIVIDUAL BAG PER LOT NUMBER QUANTITIES.

| ITEM | QTY | MFG. | 101 PART NO. | DESCRIPTION |
|---|---|---|---|---|
| 2 | "X" FT | 101 | SEE "TABULATION BLOCK" | MODULAR COIL CABLE, 26 AWG (7/34) BARE COPPER, 4 CONDUCTOR, UNSHIELDED, PVC JACKET, (SEE TABULATION BLOCK FOR COLOR). |
| 1 | 1 PC | 101 | 325-641-50X | CONNECTOR, MODULAR PLUG, 6 POSITION, 4 CONDUCTOR, 50u" Au, FLAT TYPE EXIT. |

CABLE ASSEMBLY PARTS LIST

THIRD ANGLE PROJECTION

UNLESS OTHERWISE NOTED:
1) DIMENSIONS ARE IN INCHES [MILLIMETER]
2) TOLERANCES:
X.XX ± 0.25 [6.35]

I/O INTERCONNECT
SANTA ANA, CALIFORNIA

TITLE: 6P4C COIL CABLE TO OPEN END, CABLE ASSEMBLY

PART NO: 464-XX4-52X-D
DWG NO: 464-XX4-52X-D
CUSTOMER: DIGI KEY
REV. X2
SCALE: NONE
SHEET 1 OF 1

THESE DRAWINGS AND SPECIFICATIONS ARE THE SOLE PROPERTY OF I/O INTERCONNECT INC., U.S.A. AND SHALL NOT BE REPRODUCED, COPIED, OR USED IN ANY MANNER WITHOUT THE PRIOR WRITTEN CONSENT OF I/O INTERCONNECT INC. OR ITS AFFILIATED SUBSIDIARIES.

| DWG. NO. | ZONE | REV. | DESCRIPTION | DATE | APPROVED |
|---|---|---|---|---|---|
| XX4-51X-D | | X1 | CUSTOMER APPROVAL | 03/26/99 | E.W. |
| | | X2 | ADD RETRACTED LENGTH | 03/29/99 | E.W. |

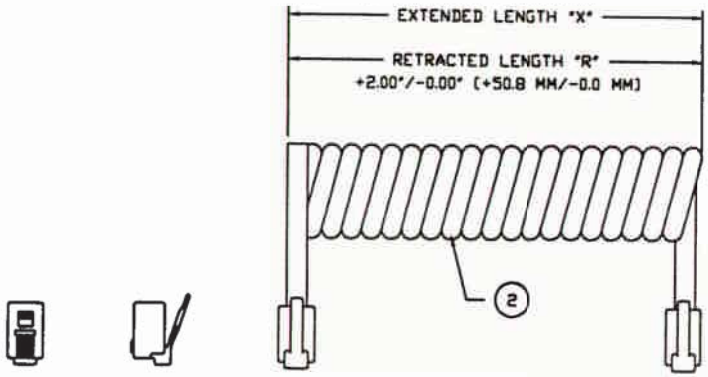


P1

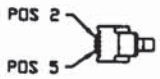


WIRE DIAGRAM

| P1 | | P2 |
|---|---|---|
| 2 | BLACK | 5 |
| 3 | RED | 4 |
| 4 | GREEN | 3 |
| 5 | YELLOW | 2 |

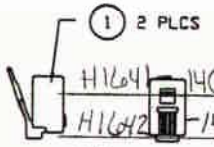


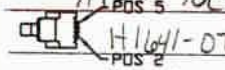


| | 101 PART NUMBER | 101 CABLE PART NUMBER | EXTENDED LENGTH "X" | RETRACTED LENGTH "R" | COLOR |
|---|---|---|---|---|---|
| H1641-14C-ND | 464-144-515-D | 121-410-022 | 14.0 FT [4.3 M] | 34.0 IN [863.6 MM] | WHITE |
| H1642-14C-ND | 464-144-514-D | 121-410-012 | 14.0 FT [4.3 M] | 34.0 IN [863.6 MM] | BLACK |
| H1643-14C-ND | 464-144-513-D | 121-410-002 | 14.0 FT [4.3 M] | 34.0 IN [863.6 MM] | SILVER SATIN |
| P2 H1641-10C-ND | 464-104-512-D | 121-410-021 | 10.0 FT [3.0 M] | 30.0 IN [762.0 MM] | WHITE |
| H1642-10C-ND | 464-104-511-D | 121-410-011 | 10.0 FT [3.0 M] | 30.0 IN [762.0 MM] | BLACK |
| H1643-10C-ND | 464-104-510-D | 121-410-001 | 10.0 FT [3.0 M] | 30.0 IN [762.0 MM] | SILVER SATIN |
| H1641-07C-ND | 464-074-515-D | 121-410-020 | 7.0 FT [2.1 M] | 21.0 IN [533.4 MM] | WHITE |
| H1642-07C-ND | 464-074-514-D | 121-410-010 | 7.0 FT [2.1 M] | 21.0 IN [533.4 MM] | BLACK |
| H1643-07C-ND | 464-074-513-D | 121-410-000 | 7.0 FT [2.1 M] | 21.0 IN [533.4 MM] | SILVER SATIN |
| H1641-05C-ND | 464-054-512-D | 121-410-023 | 5.0 FT [1.5 M] | 17.0 IN [431.8 MM] | WHITE |
| H1642-05C-ND | 464-054-511-D | 121-410-013 | 5.0 FT [1.5 M] | 17.0 IN [431.8 MM] | BLACK |
| H1643-05C-ND | 464-054-510-D | 121-410-003 | 5.0 FT [1.5 M] | 17.0 IN [431.8 MM] | SILVER SATIN |

TABULATION BLOCK

CUSTOMER APPROVAL
ENGR. SIGN Matt Nemec
DATE: 4-13-99

NOTES: UNLESS OTHERWISE SPECIFIED.

1. TEST CABLE FOR ALL OPENS & SHORTS.
2. PACKAGE CABLE ASSEMBLY INDIVIDUALLY IN PLASTIC BAG. PACKAGE INDIVIDUAL BAG PER LOT NUMBER QUANTITIES.

| ITEM | QTY | MFG. | 101 PART NO. | DESCRIPTION |
|---|---|---|---|---|
| 2 | "X" FT | 101 | SEE "TABULATION BLOCK" | MODULAR COIL CABLE, 26 AWG (7/34) BARE COPPER, 4 CONDUCTOR, UNSHIELDED, PVC JACKET, (SEE TABULATION BLOCK FOR COLOR). |
| 1 | 2 PCS | 101 | 325-641-50X | CONNECTOR, MODULAR PLUG, 6 POSITION, 4 CONDUCTOR, 50u" Au, FLAT TYPE EXIT. |

CABLE ASSEMBLY PARTS LIST

THIRD ANGLE PROJECTION

UNLESS OTHERWISE NOTED:
1) DIMENSIONS ARE IN INCHES [MILLIMETER]
2) TOLERANCES:
X.XX ± 0.25 [6.35]

I/O INTERCONNECT
SANTA ANA, CALIFORNIA

TITLE: 6P4C/6P4C COIL CABLE, STANDARD STYLE, CABLE ASSEMBLY

PART NO: 464-XX4-51X-D
DWG NO: 464-XX4-51X-D
CUSTOMER: DIGI KEY
REV. X2
SCALE: NONE
SHEET 1 OF 1

THESE DRAWINGS AND SPECIFICATIONS ARE THE SOLE PROPERTY OF I/O INTERCONNECT INC., U.S.A. AND SHALL NOT BE REPRODUCED, COPIED, OR USED IN ANY MANNER WITHOUT THE PRIOR WRITTEN CONSENT OF I/O INTERCONNECT INC. OR ITS AFFILIATED SUBSIDIARIES.

| DWG. NO. | ZONE | REV. | DESCRIPTION | DATE | APPROVED |
|---|---|---|---|---|---|
| XX4-50X-D | | X1 | CUSTOMER APPROVAL | 03/25/99 | E.W. |
| | | X2 | ADD RETRACTED LENGTH | 03/29/99 | E.W. |

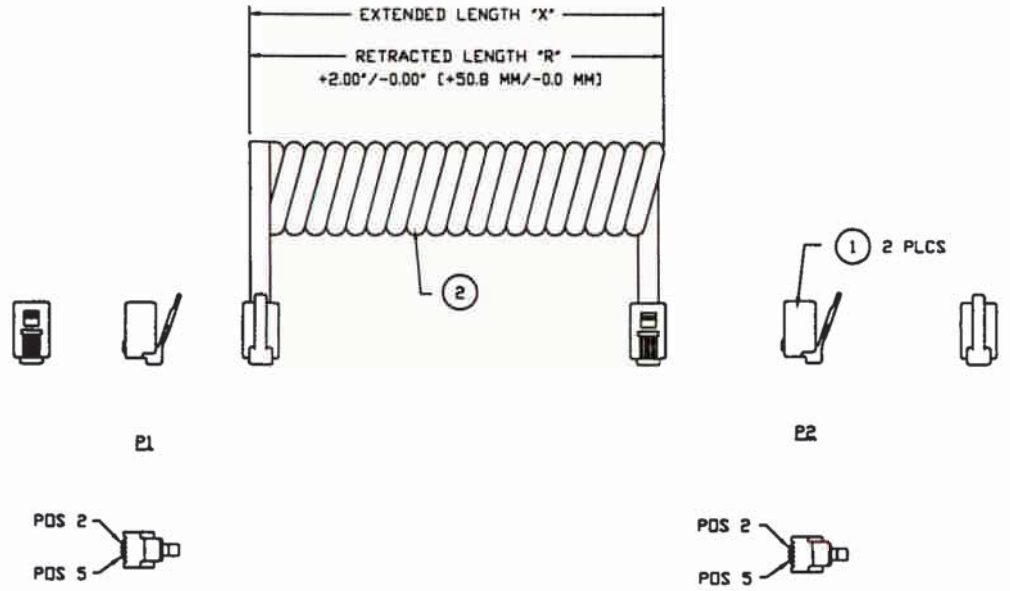


WIRE DIAGRAM

| P1 | | P2 |
|---|---|---|
| 2 | BLACK | 2 |
| 3 | RED | 3 |
| 4 | GREEN | 4 |
| 5 | YELLOW | 5 |

| 101 PART NUMBER | 101 CABLE PART NUMBER | EXTENDED LENGTH "X" | RETRACTED LENGTH "R" | COLOR |
|---|---|---|---|---|
| 464-144-505-D | 121-410-022 | 14.0 FT [4.3 M] | 34.0 IN [863.6 MM] | WHITE |
| 464-144-504-D | 121-410-012 | 14.0 FT [4.3 M] | 34.0 IN [863.6 MM] | BLACK |
| 464-144-503-D | 121-410-002 | 14.0 FT [4.3 M] | 34.0 IN [863.6 MM] | SILVER SATIN |
| 464-104-502-D | 121-410-021 | 10.0 FT [3.0 M] | 30.0 IN [762.0 MM] | WHITE |
| 464-104-501-D | 121-410-011 | 10.0 FT [3.0 M] | 30.0 IN [762.0 MM] | BLACK |
| 464-104-500-D | 121-410-001 | 10.0 FT [3.0 M] | 30.0 IN [762.0 MM] | SILVER SATIN |
| 464-074-505-D | 121-410-020 | 7.0 FT [2.1 M] | 21.0 IN [533.4 MM] | WHITE |
| 464-074-504-D | 121-410-010 | 7.0 FT [2.1 M] | 21.0 IN [533.4 MM] | BLACK |
| 464-074-503-D | 121-410-000 | 7.0 FT [2.1 M] | 21.0 IN [533.4 MM] | SILVER SATIN |
| 464-054-502-D | 121-410-023 | 5.0 FT [1.5 M] | 17.0 IN [431.8 MM] | WHITE |
| 464-054-501-D | 121-410-013 | 5.0 FT [1.5 M] | 17.0 IN [431.8 MM] | BLACK |
| 464-054-500-D | 121-410-003 | 5.0 FT [1.5 M] | 17.0 IN [431.8 MM] | SILVER SATIN |

TABULATION BLOCK

CUSTOMER APPROVAL
ENGR. SIGN Matt Nemec
DATE: 4-13-99

NOTES: UNLESS OTHERWISE SPECIFIED.

1. TEST CABLE FOR ALL OPENS & SHORTS.
2. PACKAGE CABLE ASSEMBLY INDIVIDUALLY IN PLASTIC BAG. PACKAGE INDIVIDUAL BAG PER LOT NUMBER QUANTITIES.

| ITEM | QTY | MFG. | 101 PART NO. | DESCRIPTION |
|---|---|---|---|---|
| 2 | "X" FT | 101 | SEE "TABULATION BLOCK" | MODULAR COIL CABLE, 26 AWG (7/34) BARE COPPER, 4 CONDUCTOR, UNSHIELDED, PVC JACKET, (SEE TABULATION BLOCK FOR COLOR). |
| 1 | 2 PCS | 101 | 325-641-50X | CONNECTOR, MODULAR PLUG, 6 POSITION, 4 CONDUCTOR, 50u" Au, FLAT TYPE EXIT. |

CABLE ASSEMBLY PARTS LIST

THIRD ANGLE PROJECTION

UNLESS OTHERWISE NOTED:
1) DIMENSIONS ARE IN INCHES [MILLIMETER]
2) TOLERANCES:
X.XX ± 0.25 [6.35]

I/O INTERCONNECT
SANTA ANA, CALIFORNIA

TITLE: 6P4C/6P4C COIL CABLE, REVERSE STYLE, CABLE ASSEMBLY

PART NO: 464-XX4-50X-D
DWG NO: 464-XX4-50X-D
CUSTOMER: DIGI KEY
REV. X2
SCALE: NONE
SHEET 1 OF 1

THESE DRAWINGS AND SPECIFICATIONS ARE THE SOLE PROPERTY OF I/O INTERCONNECT INC., U.S.A. AND SHALL NOT BE REPRODUCED, COPIED, OR USED IN ANY MANNER WITHOUT THE PRIOR WRITTEN CONSENT OF I/O INTERCONNECT INC. OR ITS AFFILIATED SUBSIDIARIES.

| DWG. NO. | ZONE | REV. | DESCRIPTION | DATE | APPROVED |
|---|---|---|---|---|---|
| XX4-522-D | | X1 | CUSTOMER APPROVAL | 03/24/99 | E.W. |

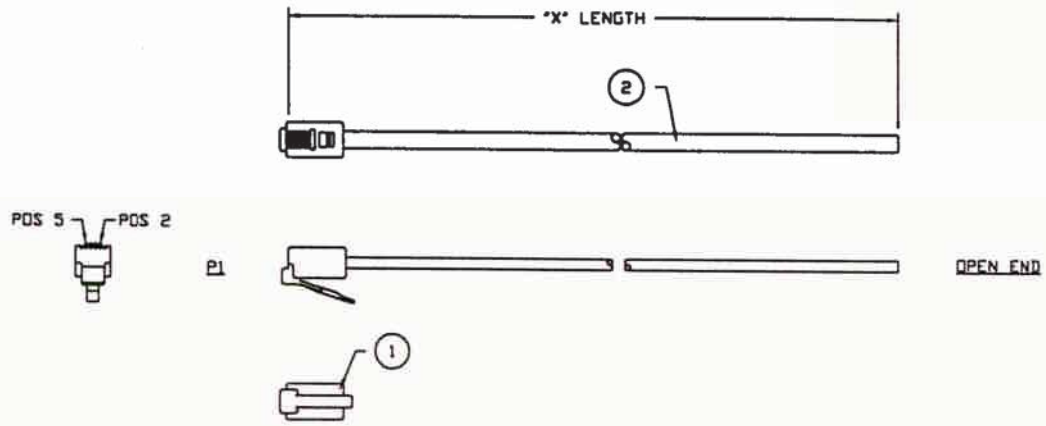


WIRE DIAGRAM

| P1 | OPEN END |
|---|---|
| 2 | BLACK |
| 3 | RED |
| 4 | GREEN |
| 5 | YELLOW |

CUSTOMER APPROVAL
ENGR. SIGN Matt Nemec
DATE: 4-12-99

H3641-25-ND
H3641-14-ND
H3641-07-ND

| PART NUMBER I/O INTERCONNECT | LENGTH "X" |
|---|---|
| 464-254-522-D | 25.0 FT ± 4.0 IN<br>7.62 M ± 101.6 MM |
| 464-144-522-D | 14.0 FT ± 3.0 IN<br>4.27 M ± 76.2 MM |
| 464-074-522-D | 7.0 FT ± 2.0 IN<br>2.13 M ± 50.8 MM |

NOTES: UNLESS OTHERWISE SPECIFIED.

1. CABLE TO BE BUNDLED AND TWIST TIED.
2. TEST CABLE FOR ALL OPENS & SHORTS.
3. PACKAGE CABLE ASSEMBLY INDIVIDUALLY IN PLASTIC BAG. PACKAGE INDIVIDUAL BAG PER LOT NUMBER QUANTITIES.

| ITEM | QTY | MFG. | I/O PART NO. | DESCRIPTION |
|---|---|---|---|---|
| 2 | "X" | I/O | 120-410-020 | MODULAR CABLE, 26 AWG (7/34) BARE COPPER, 4 CONDUCTOR, UNSHIELDED, WHITE PVC. |
| 1 | 1 PC | I/O | 325-641-50X | CONNECTOR, MODULAR PLUG, 6 POSITION, 4 CONDUCTOR, 50u" Au, FLAT TYPE EXIT. |

CABLE ASSEMBLY PARTS LIST

THIRD ANGLE PROJECTION

UNLESS OTHERWISE NOTED:
1) DIMENSIONS ARE IN INCHES [MILLIMETER]
2) TOLERANCES:
X.XX ± 0.25 [6.35]

I/O INTERCONNECT
SANTA ANA, CALIFORNIA

TITLE: 6P4C MODULAR TO OPEN END, WHITE, CABLE ASSEMBLY

PART NO: 464-XX4-522-D
DWG NO: 464-XX4-522-D
CUSTOMER: DIGI KEY
REV. X1
SCALE: NONE
SHEET 1 OF 1

THESE DRAWINGS AND SPECIFICATIONS ARE THE SOLE PROPERTY OF I/O INTERCONNECT INC., U.S.A. AND SHALL NOT BE REPRODUCED, COPIED, OR USED IN ANY MANNER WITHOUT THE PRIOR WRITTEN CONSENT OF I/O INTERCONNECT INC. OR ITS AFFILIATED SUBSIDIARIES.

| DWG. NO. | ZONE | REV. | DESCRIPTION | DATE | APPROVED |
|---|---|---|---|---|---|
| XX4-521-D | | X1 | CUSTOMER APPROVAL | 03/24/99 | E.W. |

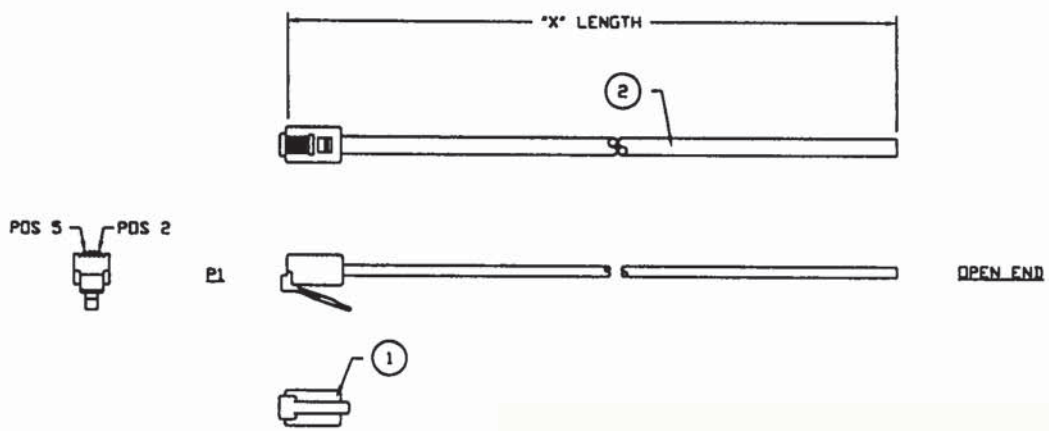


WIRE DIAGRAM

| P1 | OPEN END |
|---|---|
| 2 | BLACK |
| 3 | RED |
| 4 | GREEN |
| 5 | YELLOW |

CUSTOMER APPROVAL
ENGR. SIGN Matt Nemec
DATE: 4-12-99

H3642-25-ND
H3642-14-ND
H3642-07-ND

| PART NUMBER I/O INTERCONNECT | LENGTH "X" |
|---|---|
| 464-254-521-D | 25.0 FT ± 4.0 IN<br>7.62 M ± 101.6 MM |
| 464-144-521-D | 14.0 FT ± 3.0 IN<br>4.27 M ± 76.2 MM |
| 464-074-521-D | 7.0 FT ± 2.0 IN<br>2.13 M ± 50.8 MM |

NOTES: UNLESS OTHERWISE SPECIFIED.

1. CABLE TO BE BUNDLED AND TWIST TIED.
2. TEST CABLE FOR ALL OPENS & SHORTS.
3. PACKAGE CABLE ASSEMBLY INDIVIDUALLY IN PLASTIC BAG. PACKAGE INDIVIDUAL BAG PER LOT NUMBER QUANTITIES.

| ITEM | QTY | MFG. | IOI PART NO. | DESCRIPTION |
|---|---|---|---|---|
| 2 | "X" | IOI | 120-410-010 | MODULAR CABLE, 26 AWG (7/34) BARE COPPER, 4 CONDUCTOR, UNSHIELDED, BLACK PVC. |
| 1 | 1 PC | IOI | 325-641-50X | CONNECTOR, MODULAR PLUG, 6 POSITION, 4 CONDUCTOR, 50u" Au, FLAT TYPE EXIT. |

CABLE ASSEMBLY PARTS LIST

THIRD ANGLE PROJECTION

UNLESS OTHERWISE NOTED:
1) DIMENSIONS ARE IN INCHES (MILLIMETER)
2) TOLERANCES:
X.XX ± 0.25 (6.35)

I/O INTERCONNECT
SANTA ANA, CALIFORNIA

TITLE: 6P4C MODULAR TO OPEN END, BLACK, CABLE ASSEMBLY

PART NO: 464-XX4-521-D
DWG NO: 464-XX4-521-D
CUSTOMER: DIGI KEY
REV. X1
SCALE: NONE
SHEET 1 OF 1

THESE DRAWINGS AND SPECIFICATIONS ARE THE SOLE PROPERTY OF I/O INTERCONNECT INC., U.S.A. AND SHALL NOT BE REPRODUCED, COPIED, OR USED IN ANY MANNER WITHOUT THE PRIOR WRITTEN CONSENT OF I/O INTERCONNECT INC. OR ITS AFFILIATED SUBSIDIARIES.

| DWG. NO. | ZONE | REV. | DESCRIPTION | DATE | APPROVED |
|---|---|---|---|---|---|
| XX4-520-D | | X1 | CUSTOMER APPROVAL | 03/24/99 | E.V. |

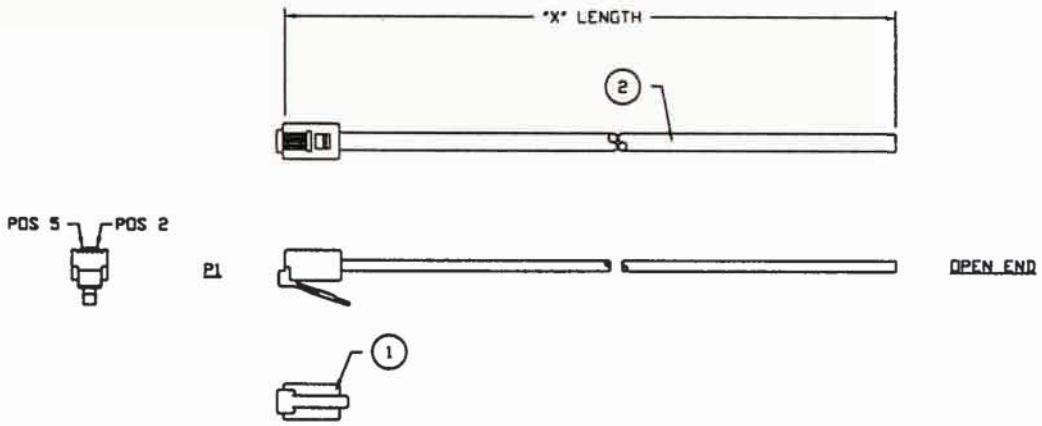


WIRE DIAGRAM

| P1 | OPEN END |
|---|---|
| 2 | BLACK |
| 3 | RED |
| 4 | GREEN |
| 5 | YELLOW |

CUSTOMER APPROVAL
ENGR. SIGN Matt Nemec
DATE: 4-12-99

H3643-25-ND
H3643-14-ND
H3643-07-ND

| PART NUMBER I/O INTERCONNECT | LENGTH "X" |
|---|---|
| 464-254-520-D | 25.0 FT ± 4.0 IN<br>7.62 M ± 101.6 MM |
| 464-144-520-D | 14.0 FT ± 3.0 IN<br>4.27 M ± 76.2 MM |
| 464-074-520-D | 7.0 FT ± 2.0 IN<br>2.13 M ± 50.8 MM |

NOTES: UNLESS OTHERWISE SPECIFIED.

1. CABLE TO BE BUNDLED AND TWIST TIED.
2. TEST CABLE FOR ALL OPENS & SHORTS.
3. PACKAGE CABLE ASSEMBLY INDIVIDUALLY IN PLASTIC BAG. PACKAGE INDIVIDUAL BAG PER LOT NUMBER QUANTITIES.

| ITEM | QTY | MFG. | IOI PART NO. | DESCRIPTION |
|---|---|---|---|---|
| 2 | "X" | IOI | 120-410-000 | MODULAR CABLE, 26 AWG (7/34) BARE COPPER, 4 CONDUCTOR, UNSHIELDED, SILVER SATIN PVC. |
| 1 | 1 PC | IOI | 325-641-50X | CONNECTOR, MODULAR PLUG, 6 POSITION, 4 CONDUCTOR, 50u" Au, FLAT TYPE EXIT. |

CABLE ASSEMBLY PARTS LIST

THIRD ANGLE PROJECTION

UNLESS OTHERWISE NOTED:
1) DIMENSIONS ARE IN INCHES (MILLIMETER)
2) TOLERANCES:
X.XX ± 0.25 (6.35)

I/O INTERCONNECT
SANTA ANA, CALIFORNIA

TITLE: 6P4C MODULAR TO OPEN END, SILVER SATIN, CABLE ASSEMBLY

PART NO: 464-XX4-520-D
DWG NO: 464-XX4-520-D
CUSTOMER: DIGI KEY
REV. X1
SCALE: NONE
SHEET 1 OF 1

THESE DRAWINGS AND SPECIFICATIONS ARE THE SOLE PROPERTY OF I/O INTERCONNECT INC., U.S.A. AND SHALL NOT BE REPRODUCED, COPIED, OR USED IN ANY MANNER WITHOUT THE PRIOR WRITTEN CONSENT OF I/O INTERCONNECT INC. OR ITS AFFILIATED SUBSIDIARIES.

| DWG. NO. | ZONE | REV. | DESCRIPTION | DATE | APPROVED |
|---|---|---|---|---|---|
| XX4-512-D | | X1 | CUSTOMER APPROVAL | 03/24/99 | E.W. |

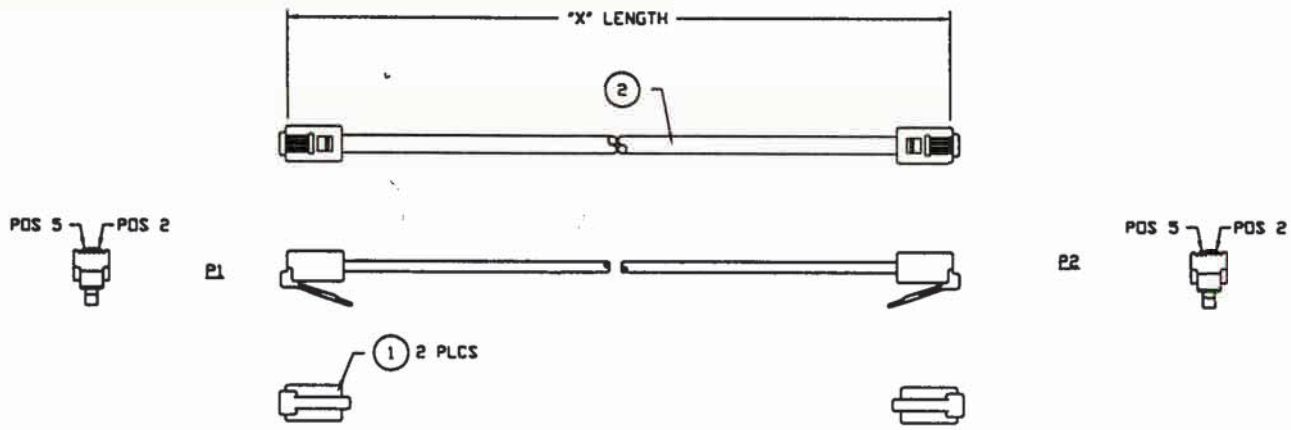


WIRE DIAGRAM

| P1 | | P2 |
|---|---|---|
| 2 | BLACK | 5 |
| 3 | RED | 4 |
| 4 | GREEN | 3 |
| 5 | YELLOW | 2 |

CUSTOMER APPROVAL
ENGR. SIGN Matt Nemec
DATE: 4-12-99

H1641-25-ND
H1641-14-ND
H1641-07-ND

| PART NUMBER I/O INTERCONNECT | LENGTH "X" |
|---|---|
| 464-254-512-D | 25.0 FT ± 4.0 IN<br>7.62 M ± 101.6 MM |
| 464-144-512-D | 14.0 FT ± 3.0 IN<br>4.27 M ± 76.2 MM |
| 464-074-512-D | 7.0 FT ± 2.0 IN<br>2.13 M ± 50.8 MM |

NOTES: UNLESS OTHERWISE SPECIFIED.

1. CABLE TO BE BUNDLED AND TWIST TIED.
2. TEST CABLE FOR ALL OPENS & SHORTS.
3. PACKAGE CABLE ASSEMBLY INDIVIDUALLY IN PLASTIC BAG. PACKAGE INDIVIDUAL BAG PER LOT NUMBER QUANTITIES.

THIRD ANGLE PROJECTION

UNLESS OTHERWISE NOTED:
1) DIMENSIONS ARE IN INCHES (MILLIMETER)
2) TOLERANCES:
X.XX ± 0.25 (6.35)

I/O INTERCONNECT
SANTA ANA, CALIFORNIA

TITLE: 6P4C MODULAR, STANDARD STYLE, WHITE, CABLE ASSEMBLY

PART NO.: 464-XX4-512-D
DWG NO.: 464-XX4-512-D
CUSTOMER: DIGI KEY
REV. X1
SCALE: NONE
SHEET 1 OF 1

| ITEM | QTY | MFG. | PART NO. | DESCRIPTION |
|---|---|---|---|---|
| 2 | "X" | IOI | 120-410-020 | MODULAR CABLE, 26 AVG (7/34) BARE COPPER, 4 CONDUCTOR, UNSHIELDED, WHITE PVC. |
| 1 | 2 PCS | IOI | 325-641-50X | CONNECTOR, MODULAR PLUG, 6 POSITION, 4 CONDUCTOR, 50u" Au, FLAT TYPE EXIT. |

CABLE ASSEMBLY PARTS LIST

THESE DRAWINGS AND SPECIFICATIONS ARE THE SOLE PROPERTY OF I/O INTERCONNECT INC., U.S.A. AND SHALL NOT BE REPRODUCED, COPIED, OR USED IN ANY MANNER WITHOUT THE PRIOR WRITTEN CONSENT OF I/O INTERCONNECT INC. OR ITS AFFILIATED SUBSIDIARIES.

| DWG. NO. | ZONE | REV. | DESCRIPTION | DATE | APPROVED |
|---|---|---|---|---|---|
| XX4-511-D | | X1 | CUSTOMER APPROVAL | 03/24/99 | E.V. |

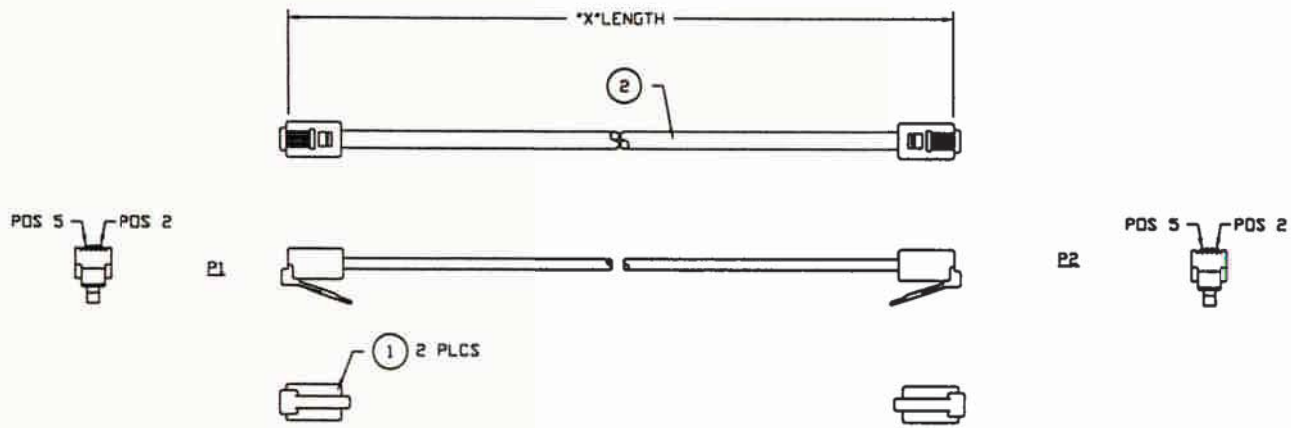


WIRE DIAGRAM

| P1 | | P2 |
|---|---|---|
| 2 | BLACK | 5 |
| 3 | RED | 4 |
| 4 | GREEN | 3 |
| 5 | YELLOW | 2 |

**CUSTOMER APPROVAL**
**ENGR. SIGN** Matt Nemec
**DATE:** 4-12-99

NOTES: UNLESS OTHERWISE SPECIFIED.

1. CABLE TO BE BUNDLED AND TWIST TIED.
2. TEST CABLE FOR ALL OPENS & SHORTS.
3. PACKAGE CABLE ASSEMBLY INDIVIDUALLY IN PLASTIC BAG. PACKAGE INDIVIDUAL BAG PER LOT NUMBER QUANTITIES.

| PART NUMBER I/O INTERCONNECT | LENGTH "X" |
|---|---|
| H1642-25-ND 464-254-511-D | 25.0 FT ± 4.0 IN 7.62 M ± 101.6 MM |
| H1642-14-ND 464-144-511-D | 14.0 FT ± 3.0 IN 4.27 M ± 76.2 MM |
| H1642-07-ND 464-074-511-D | 7.0 FT ± 2.0 IN 2.13 M ± 50.8 MM |

| ITEM | QTY | MFG. | IOI PART NO. | DESCRIPTION |
|---|---|---|---|---|
| 2 | "X" | IOI | 120-410-010 | MODULAR CABLE, 26 AWG (7/34) BARE COPPER, 4 CONDUCTOR, UNSHIELDED, BLACK PVC. |
| 1 | 2 PCS | IOI | 325-641-50X | CONNECTOR, MODULAR PLUG, 6 POSITION, 4 CONDUCTOR, 50u" Au, FLAT TYPE EXIT. |

CABLE ASSEMBLY PARTS LIST

THIRD ANGLE PROJECTION

UNLESS OTHERWISE NOTED:
1) DIMENSIONS ARE IN INCHES (MILLIMETER)
2) TOLERANCES: X.XX ± 0.25 (6.35)

I/O INTERCONNECT
SANTA ANA, CALIFORNIA

TITLE: 6P4C MODULAR, STANDARD STYLE, BLACK, CABLE ASSEMBLY

PART NO: 464-XX4-511-D
DWG NO: 464-XX4-511-D
CUSTOMER: DIGI KEY
REV. X1
SCALE: NONE
SHEET 1 OF 1

THESE DRAWINGS AND SPECIFICATIONS ARE THE SOLE PROPERTY OF I/O INTERCONNECT INC., U.S.A. AND SHALL NOT BE REPRODUCED, COPIED, OR USED IN ANY MANNER WITHOUT THE PRIOR WRITTEN CONSENT OF I/O INTERCONNECT INC. OR ITS AFFILIATED SUBSIDIARIES.

| DWG. NO. | ZONE | REV. | DESCRIPTION | DATE | APPROVED |
|---|---|---|---|---|---|
| XX4-510-D | | X1 | CUSTOMER APPROVAL | 03/24/99 | E.W. |

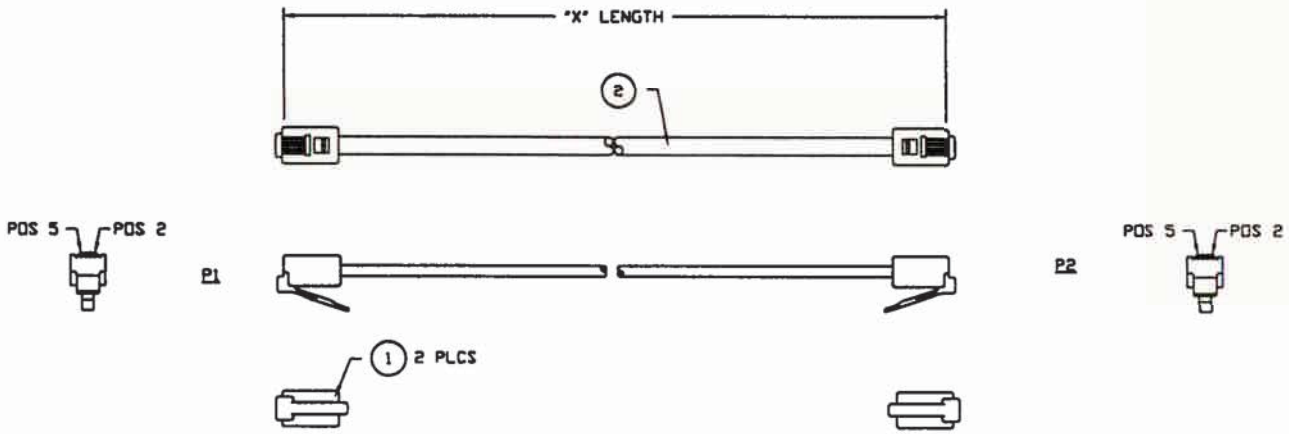


WIRE DIAGRAM

| P1 | | P2 |
|---|---|---|
| 2 | BLACK | 5 |
| 3 | RED | 4 |
| 4 | GREEN | 3 |
| 5 | YELLOW | 2 |

CUSTOMER APPROVAL
ENGR. SIGN Matt Nemec
DATE: 4-12-99

NOTES: UNLESS OTHERWISE SPECIFIED.

1. CABLE TO BE BUNDLED AND TWIST TIED.
2. TEST CABLE FOR ALL OPENS & SHORTS.
3. PACKAGE CABLE ASSEMBLY INDIVIDUALLY IN PLASTIC BAG. PACKAGE INDIVIDUAL BAG PER LOT NUMBER QUANTITIES.

| | PART NUMBER I/O INTERCONNECT | LENGTH "X" |
|---|---|---|
| H1643-25-ND | 464-254-510-D | 25.0 FT ± 4.0 IN<br>7.62 M ± 101.6 MM |
| H1643-14-ND | 464-144-510-D | 14.0 FT ± 3.0 IN<br>4.27 M ± 76.2 MM |
| H1643-07-ND | 464-074-510-D | 7.0 FT ± 2.0 IN<br>2.13 M ± 50.8 MM |

| ITEM | QTY | MFG. | IOI PART NO. | DESCRIPTION |
|---|---|---|---|---|
| 2 | "X" | IOI | 120-410-000 | MODULAR CABLE, 26 AWG (7/34) BARE COPPER, 4 CONDUCTOR, UNSHIELDED, SILVER SATIN PVC. |
| 1 | 2 PCS | IOI | 325-641-50X | CONNECTOR, MODULAR PLUG, 6 POSITION, 4 CONDUCTOR, 50u" Au, FLAT TYPE EXIT. |

CABLE ASSEMBLY PARTS LIST

THIRD ANGLE PROJECTION

UNLESS OTHERWISE NOTED:
1) DIMENSIONS ARE IN INCHES (MILLIMETER)
2) TOLERANCES:
X.XX ± 0.25 (6.35)

I/O INTERCONNECT
SANTA ANA, CALIFORNIA

TITLE: 6P4C MODULAR, STANDARD STYLE, SILVER SATIN, CABLE ASSEMBLY

PART NO: 464-XX4-510-D
DWG NO: 464-XX4-510-D
CUSTOMER: DIGI KEY
REV. X1
SCALE: NONE
SHEET 1 OF 1

THESE DRAWINGS AND SPECIFICATIONS ARE THE SOLE PROPERTY OF I/O INTERCONNECT INC., U.S.A. AND SHALL NOT BE REPRODUCED, COPIED, OR USED IN ANY MANNER WITHOUT THE PRIOR WRITTEN CONSENT OF I/O INTERCONNECT INC. OR ITS AFFILIATED SUBSIDIARIES.

| DWG. NO. | ZONE | REV. | DESCRIPTION | DATE | APPROVED |
|---|---|---|---|---|---|
| XX4-502-D | | X1 | CUSTOMER APPROVAL | 03/24/99 | E.W. |

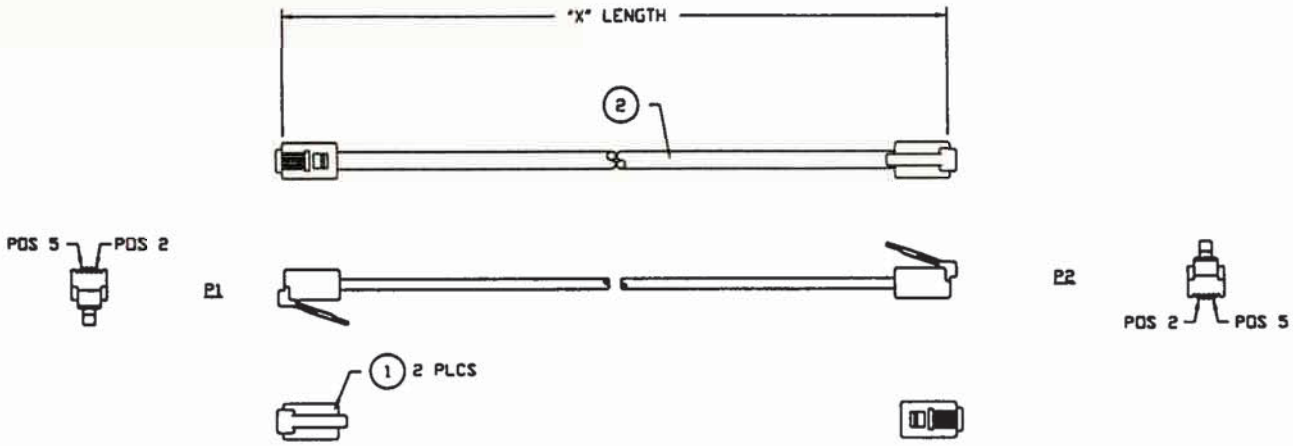


WIRE DIAGRAM

| P1 | | P2 |
|---|---|---|
| 2 | BLACK | 2 |
| 3 | RED | 3 |
| 4 | GREEN | 4 |
| 5 | YELLOW | 5 |

CUSTOMER APPROVAL
ENGR. SIGN Matt Nemec
DATE: 4-12-99

H2641-25-ND
H2641-14-ND
H2641-07-ND

| PART NUMBER I/O INTERCONNECT | LENGTH "X" |
|---|---|
| 464-254-502-D | 25.0 FT ± 4.0 IN<br>7.62 M ± 101.6 MM |
| 464-144-502-D | 14.0 FT ± 3.0 IN<br>4.27 M ± 76.2 MM |
| 464-074-502-D | 7.0 FT ± 2.0 IN<br>2.13 M ± 50.8 MM |

NOTES: UNLESS OTHERWISE SPECIFIED.

1. CABLE TO BE BUNDLED AND TWIST TIED.
2. TEST CABLE FOR ALL OPENS & SHORTS.
3. PACKAGE CABLE ASSEMBLY INDIVIDUALLY IN PLASTIC BAG. PACKAGE INDIVIDUAL BAG PER LOT NUMBER QUANTITIES.

| ITEM | QTY | MFG. | I/O PART NO. | DESCRIPTION |
|---|---|---|---|---|
| 2 | "X" | I/O | 120-410-020 | MODULAR CABLE, 26 AWG (7/34) BARE COPPER, 4 CONDUCTOR, UNSHIELDED, WHITE PVC. |
| 1 | 2 PCS | I/O | 325-641-50X | CONNECTOR, MODULAR PLUG, 6 POSITION, 4 CONDUCTOR, 50u" Au, FLAT TYPE EXIT. |

CABLE ASSEMBLY PARTS LIST

THIRD ANGLE PROJECTION

UNLESS OTHERWISE NOTED:
1) DIMENSIONS ARE IN INCHES [MILLIMETER]
2) TOLERANCES:
X.XX ± 0.25 [6.35]

I/O INTERCONNECT
SANTA ANA, CALIFORNIA

TITLE: 6P4C MODULAR, REVERT STYLE, WHITE, CABLE ASSEMBLY

PART NO.: 464-XX4-502-D
DWG NO.: 464-XX4-502-D
CUSTOMER: DIGI KEY
REV. X1
SCALE: NONE
SHEET 1 OF 1

THESE DRAWINGS AND SPECIFICATIONS ARE THE SOLE PROPERTY OF I/O INTERCONNECT INC., U.S.A. AND SHALL NOT BE REPRODUCED, COPIED, OR USED IN ANY MANNER WITHOUT THE PRIOR WRITTEN CONSENT OF I/O INTERCONNECT INC. OR ITS AFFILIATED SUBSIDIARIES.

| DWG. NO. | ZONE | REV. | DESCRIPTION | DATE | APPROVED |
|---|---|---|---|---|---|
| XX4-501-D | | X1 | CUSTOMER APPROVAL | 03/24/99 | E.W. |

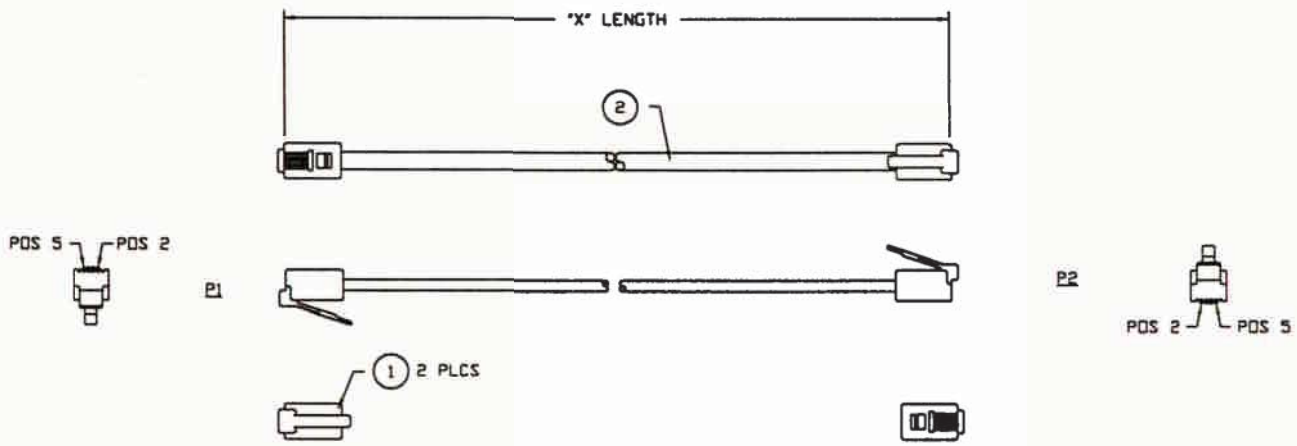


WIRE DIAGRAM

| P1 | | P2 |
|---|---|---|
| 2 | BLACK | 2 |
| 3 | RED | 3 |
| 4 | GREEN | 4 |
| 5 | YELLOW | 5 |

CUSTOMER APPROVAL
ENGR. SIGN Matt Nemec
DATE: 4-12-99

H2642-25-ND
H2642-14-ND
H2642-07-ND

| PART NUMBER I/O INTERCONNECT | LENGTH "X" |
|---|---|
| 464-254-501-D | 25.0 FT ± 4.0 IN<br>7.62 M ± 101.6 MM |
| 464-144-501-D | 14.0 FT ± 3.0 IN<br>4.27 M ± 76.2 MM |
| 464-074-501-D | 7.0 FT ± 2.0 IN<br>2.13 M ± 50.8 MM |

NOTES: UNLESS OTHERWISE SPECIFIED.

1. CABLE TO BE BUNDLED AND TWIST TIED.
2. TEST CABLE FOR ALL OPENS & SHORTS.
3. PACKAGE CABLE ASSEMBLY INDIVIDUALLY IN PLASTIC BAG. PACKAGE INDIVIDUAL BAG PER LOT NUMBER QUANTITIES.

| ITEM | QTY | MFG. | I01 PART NO. | DESCRIPTION |
|---|---|---|---|---|
| 2 | "X" | I01 | 120-410-010 | MODULAR CABLE, 26 AWG (7/34) BARE COPPER, 4 CONDUCTOR, UNSHIELDED, BLACK PVC. |
| 1 | 2 PCS | I01 | 325-641-50X | CONNECTOR, MODULAR PLUG, 6 POSITION, 4 CONDUCTOR, 50u" Au, FLAT TYPE EXIT. |

CABLE ASSEMBLY PARTS LIST

THIRD ANGLE PROJECTION

UNLESS OTHERWISE NOTED:
1) DIMENSIONS ARE IN INCHES (MILLIMETER)
2) TOLERANCES:
X.XX ± 0.25 (6.35)

I/O INTERCONNECT
SANTA ANA, CALIFORNIA

TITLE: 6P4C MODULAR, REVERT STYLE, BLACK, CABLE ASSEMBLY

PART NO: 464-XX4-501-D
DWG NO: 464-XX4-501-D
CUSTOMER: DIGI KEY
REV. X1
SCALE: NONE
SHEET 1 OF 1

THESE DRAWINGS AND SPECIFICATIONS ARE THE SOLE PROPERTY OF I/O INTERCONNECT INC., U.S.A. AND SHALL NOT BE REPRODUCED, COPIED, OR USED IN ANY MANNER WITHOUT THE PRIOR WRITTEN CONSENT OF I/O INTERCONNECT INC. OR ITS AFFILIATED SUBSIDIARIES.

| DWG. NO. | ZONE | REV. | DESCRIPTION | DATE | APPROVED |
|---|---|---|---|---|---|
| XX4-500-D | | X1 | CUSTOMER APPROVAL | 03/24/99 | E.V. |

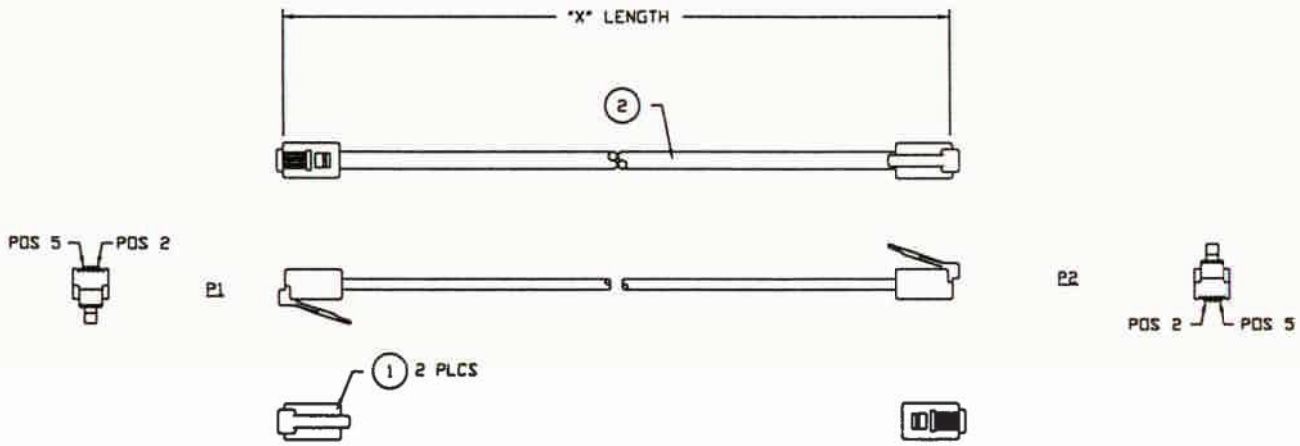


WIRE DIAGRAM

| P1 | | P2 |
|---|---|---|
| 2 | BLACK | 2 |
| 3 | RED | 3 |
| 4 | GREEN | 4 |
| 5 | YELLOW | 5 |

CUSTOMER APPROVAL
ENGR. SIGN Matt Lemus
DATE: 4-12-99

H2643-25-ND
H2643-14-ND
H2643-07-ND

| PART NUMBER I/O INTERCONNECT | LENGTH "X" |
|---|---|
| 464-254-500-D | 25.0 FT ± 4.0 IN<br>7.62 M ± 101.6 MM |
| 464-144-500-D | 14.0 FT ± 3.0 IN<br>4.27 M ± 76.2 MM |
| 464-074-500-D | 7.0 FT ± 2.0 IN<br>2.13 M ± 50.8 MM |

NOTES: UNLESS OTHERWISE SPECIFIED.

1. CABLE TO BE BUNDLED AND TWIST TIED.
2. TEST CABLE FOR ALL OPENS & SHORTS.
3. PACKAGE CABLE ASSEMBLY INDIVIDUALLY IN PLASTIC BAG. PACKAGE INDIVIDUAL BAG PER LOT NUMBER QUANTITIES.

| ITEM | QTY | MFG. | IOI PART NO. | DESCRIPTION |
|---|---|---|---|---|
| 2 | "X" | IOI | 120-410-000 | MODULAR CABLE, 26 AWG (7/34) BARE COPPER, 4 CONDUCTOR, UNSHIELDED, SILVER SATIN PVC. |
| 1 | 2 PCS | IOI | 325-641-50X | CONNECTOR, MODULAR PLUG, 6 POSITION, 4 CONDUCTOR, 50u" Au, FLAT TYPE EXIT. |

CABLE ASSEMBLY PARTS LIST

THIRD ANGLE PROJECTION

UNLESS OTHERWISE NOTED:
1) DIMENSIONS ARE IN INCHES [MILLIMETER]
2) TOLERANCES:
X.XX ± 0.25 [6.35]

I/O INTERCONNECT
SANTA ANA, CALIFORNIA

TITLE: 6P4C MODULAR, REVERT STYLE, SILVER SATIN, CABLE ASSEMBLY

PART NO.: 464-XX4-500-D
DWG NO.: 464-XX4-500-D
CUSTOMER: DIGI KEY
REV. X1
SCALE: NONE
SHEET 1 OF 1

# AMEYA360
Components Supply Platform

## Authorized Distribution Brand :

## Website :

Welcome to visit www.ameya360.com

## Contact Us :

- ## Address :

401 Building No.5, JiuGe Business Center, Lane 2301, Yishan Rd
Minhang District, Shanghai , China

- ## Sales :

Direct +86 (21) 6401-6692

Email amall@ameya360.com

QQ 800077892

Skype ameyasales1 ameyasales2

- ## Customer Service :

Email service@ameya360.com

- ## Partnership :

Tel +86 (21) 64016692-8333

Email mkt@ameya360.com