FAIRCHILD SEMICONDUCTOR®

January 2010

NC7SZ14
TinyLogic® UHS Inverter with Schmitt Trigger Input

Features

- Ultra-High Speed: t_{PD} 3.7ns (Typical) into 50pF at 5V V_{CC}
- High Output Drive: ±24mA at 3V V_{CC}
- Broad V_{CC} Operating Range: 1.65V to 5.5V
- Matches Performance of LCX when Operated at 3.3V V_{CC}
- Power Down High Impedance Inputs/Outputs
- Over-Voltage Tolerance Inputs Facilitate 5V to 3V Translation
- Proprietary Noise/EMI Reduction Circuitry
- Ultra-Small MicroPak™ Packages
- Space-Saving SOT23 and SC70 Packages

Description

The NC7SZ14 is a single inverter with Schmitt trigger input from Fairchild's Ultra-High Speed (UHS) series of TinyLogic®. The device is fabricated with advanced CMOS technology to achieve ultra-high speed with high output drive while maintaining low static power dissipation over a very broad V_{CC} operating range. The device is specified to operate over the 1.65V to 5.5V V_{CC} range. The inputs and outputs are high-impedance when V_{CC} is 0V. Inputs tolerate voltages up to 6V independent of V_{CC} operating voltage.

Ordering Information

Part Number	Operating Temperature	Top Mark	Eco Status	Package	Packing Method
NC7SZ14M5X	-40 to +85°C	7Z14	RoHS	5-Lead, SOT23, JEDEC MO-178, 1.6mm	3000 Units on Tape & Reel
NC7SZ14P5X	-40 to +85°C	Z14	RoHS	5-Lead SC70, EIAJ SC-88a, 1.25mm Wide	3000 Units on Tape & Reel
NC7SZ14L6X	-40 to +85°C	B6	RoHS	6-Lead MicroPak™, 1.00mm Wide	5000 Units on Tape & Reel
NC7SZ14FHX	-40 to +85°C	B6	Green	6-Lead, MicroPak2, 1x1mm Body, .35mm Pitch	5000 Units on Tape & Reel

For Fairchild's definition of Eco Status, please visit: http://www.fairchildsemi.com/company/green/rohs_green.html.

© 1996 Fairchild Semiconductor Corporation

Connection Diagrams

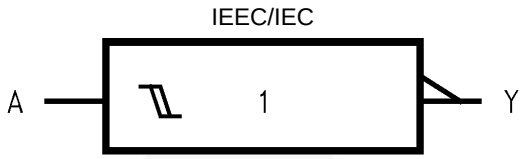

Figure 1. Logic Symbol

Pin Configurations

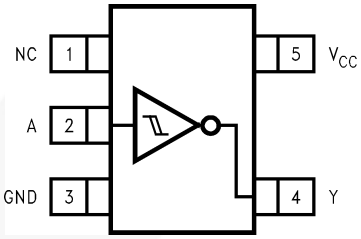

Figure 2. SOT23 and SC70 (Top View)

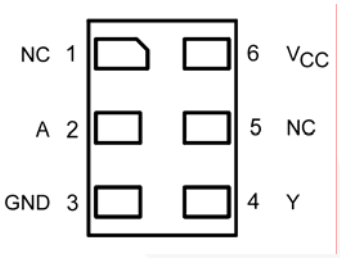

Figure 3. MicroPak (Top Through View)

Pin Definitions

Pin # SOT23 and SC70	Pin # MicroPak	Name	Description
1	1, 5	NC	No Connect
2	2	A	Input
3	3	GND	Ground
4	4	Y	Output
5	6	VCC	Supply Voltage

Function Table

Y= /A

Inputs	Output
A	**Y**
L	H
H	L

H = HIGH Logic Level

L = LOW Logic Level

© 1996 Fairchild Semiconductor Corporation

Absolute Maximum Ratings

Stresses exceeding the absolute maximum ratings may damage the device. The device may not function or be operable above the recommended operating conditions and stressing the parts to these levels is not recommended. In addition, extended exposure to stresses above the recommended operating conditions may affect device reliability. The absolute maximum ratings are stress ratings only.

Symbol	Parameter		Min.	Max.	Unit
V_{CC}	Supply Voltage		-0.5	6.0	V
V_{IN}	DC Input Voltage		-0.5	6.0	V
V_{OUT}	DC Output Voltage		-0.5	6.0	V
I_{IK}	DC Input Diode Current	V_{IN} < -0.5V		-50	mA
		V_{IN} > 6.0V		+20	
I_{OK}	DC Output Diode Current	V_{OUT} < -0.5V		-50	mA
		V_{OUT} > 6.0V, V_{CC}=GND		+20	
I_{OUT}	DC Output Current			±50	mA
I_{CC} or I_{GND}	DC V_{CC} or Ground Current			±50	mA
T_{STG}	Storage Temperature Range		-65	+150	°C
T_J	Junction Temperature Under Bias			+150	°C
T_L	Junction Lead Temperature (Soldering, 10 Seconds)			+260	°C
P_D	Power Dissipation at +85°C	SOT-23		200	mW
		SC70-5		150	
		MicroPak-6		130	
		MicroPak2-6		120	
ESD	Human Body Model, JEDEC:JESD22-A114			4000	V
	Charge Device Model, JEDEC:JESD22-C101			2000	

Recommended Operating Conditions[1]

The Recommended Operating Conditions table defines the conditions for actual device operation. Recommended operating conditions are specified to ensure optimal performance to the datasheet specifications. Fairchild does not recommend exceeding them or designing to Absolute Maximum Ratings.

Symbol	Parameter	Conditions	Min.	Max.	Unit
V_{CC}	Supply Voltage Operating		1.65	5.50	V
	Supply Voltage Data Retention		1.5	5.5	
V_{IN}	Input Voltage		0	5.5	V
V_{OUT}	Output Voltage		0	V_{CC}	V
T_A	Operating Temperature		-40	+85	°C
θ_{JA}	Thermal Resistance	SOT-23		300	°C/W
		SC70-5		425	
		MicroPak-6		500	
		MicroPak2-6		560	

Note:

1. Unused inputs must be held HIGH or LOW. They may not float.

© 1996 Fairchild Semiconductor Corporation

DC Electrical Characteristics

Symbol	Parameter	V_{CC} (V)	Conditions	T_A=+25°C			T_A=-40 to +85°C		Units
				Min.	Typ.	Max.	Min.	Max.	
V_P	Positive Threshold Voltage	1.65		0.60	1.00	1.40	0.60	1.40	
		1.80		0.70	1.10	1.50	0.70	1.50	
		2.30		1.00	1.40	1.80	1.00	1.80	
		3.00		1.30	1.75	2.20	1.30	2.20	
		4.50		1.90	2.45	3.10	1.90	3.10	
		5.50		2.20	2.90	3.60	2.20	3.60	
V_N	Negative Threshold Voltage	1.65		0.20	0.50	0.80	0.20	0.80	V
		1.80		0.25	0.55	0.90	0.25	0.90	
		2.30		0.40	0.75	1.15	0.40	1.15	
		3.00		0.60	1.00	1.50	0.60	1.50	
		4.50		1.00	1.43	2.00	1.00	2.00	
		5.50		1.20	1.70	2.30	1.20	2.30	
V_H	Hysteresis Voltage	1.65		0.10	0.48	0.90	0.10	0.90	V
		1.80		0.15	0.54	1.00	0.15	1.00	
		2.30		0.25	0.65	1.10	0.25	1.10	
		3.00		0.40	0.77	1.20	0.40	1.20	
		4.50		0.60	1.01	1.50	0.60	1.50	
		5.50		0.70	1.18	1.70	0.70	1.70	
V_{OH}	HIGH Level Output Voltage	1.65	$V_{IN}=V_{IL}$, I_{OH}=-100µA	1.55	1.65		1.55		V
		1.80		1.70	1.80		1.70		
		2.30		2.20	2.30		2.20		
		3.00		2.90	3.00		2.90		
		4.50		4.40	4.50		4.40		
		1.65	I_{OH}=-4mA	1.29	1.52		1.29		
		2.30	I_{OH}=-8mA	1.90	2.15		1.90		
		3.00	I_{OH}=-16mA	2.40	2.80		2.40		
		3.00	I_{OH}=-24mA	2.30	2.68		2.30		
		4.50	I_{OH}=-32mA	3.80	4.20		3.80		
V_{OL}	LOW Level Output Voltage	1.65	$V_{IN}=V_{IH}$, I_{OL}=100µA		0.00	0.10		0.10	V
		1.80			0.00	0.10		0.10	
		2.30			0.00	0.10		0.10	
		3.00			0.00	0.10		0.10	
		4.50			0.00	0.10		0.10	
		1.65	I_{OL}=4mA		0.08	0.24		0.24	
		2.30	I_{OL}=8mA		0.10	0.30		0.30	
		3.00	I_{OL}=16mA		0.15	0.40		0.40	
		3.00	I_{OL}=24mA		0.22	0.55		0.55	
		4.50	I_{OL}=32mA		0.22	0.55		0.55	
I_{IN}	Input Leakage Current	0 to 5.5	V_{IN}=5.5V, GND			±0.1		±1.0	µA
I_{OFF}	Power Off Leakage Current	0	V_{IN} or V_{OUT}=5.5V			1		10	µA
I_{CC}	Quiescent Supply Current	1.65 to 5.50	V_{IN}=5.5V, GND			1.0		10	µA

AC Electrical Characteristics

Symbol	Parameter	V_{CC} (V)	Conditions	T_A=+25°C			T_A=-40 to +85°C		Units	Figure
				Min.	Typ.	Max.	Min.	Max.		
t_{PLH}, t_{PHL}	Propagation Delay	1.65	C_L=15pF, R_L=1MΩ	2.0	9.1	15.0	2.0	15.6	ns	Figure 4 Figure 5
		1.80		2.0	7.6	12.5	2.0	13.0		
		2.50 ± 0.20		1.0	5.0	9.0	1.0	9.5		
		3.30 ± 0.30		1.0	3.7	6.3	1.0	6.5		
		5.00 ± 0.50		0.5	3.1	5.2	0.5	5.5		
		3.30 ± 0.30	C_L=50pF, R_L=500Ω	1.5	4.4	7.2	1.5	7.5		Figure 4 Figure 5
		5.00 ± 0.50		0.8	3.7	5.9	0.8	6.2		
C_{IN}	Input Capacitance	0.00			4				pF	
C_{PD}	Power Dissipation Capacitance(2)	3.30			24					Figure 6
		5.00			30					

Note:

2. C_{PD} is defined as the value of the internal equivalent capacitance which is derived from dynamic operating current consumption (I_{CCD}) at no output loading and operating at 50% duty cycle. C_{PD} is related to I_{CCD} dynamic operating current by the expression: $I_{CCD}=(C_{PD})(V_{CC})(f_{IN})+(I_{CC}static)$.

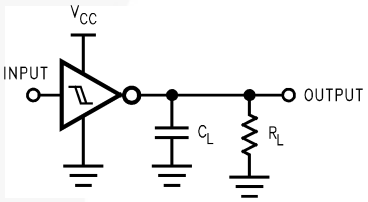

Note:

3. C_L includes load and stray capacitance; Input PRR=1.0MHz; t_W=500ns

Figure 4. AC Test Circuit

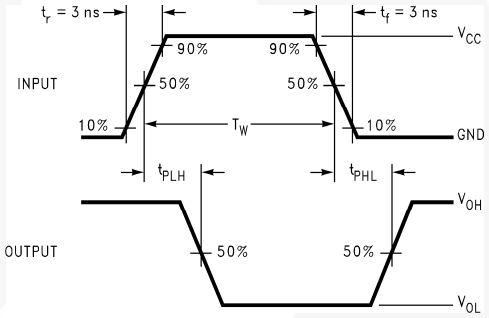

Figure 5. AC Waveforms

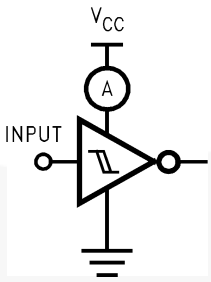

Note:

4. Input=AC Waveform; t_r=t_f=1.8ns; PRR=10MHz; Duty Cycle =50%.

Figure 6. I_{CCD} Test Circuit

Physical Dimensions

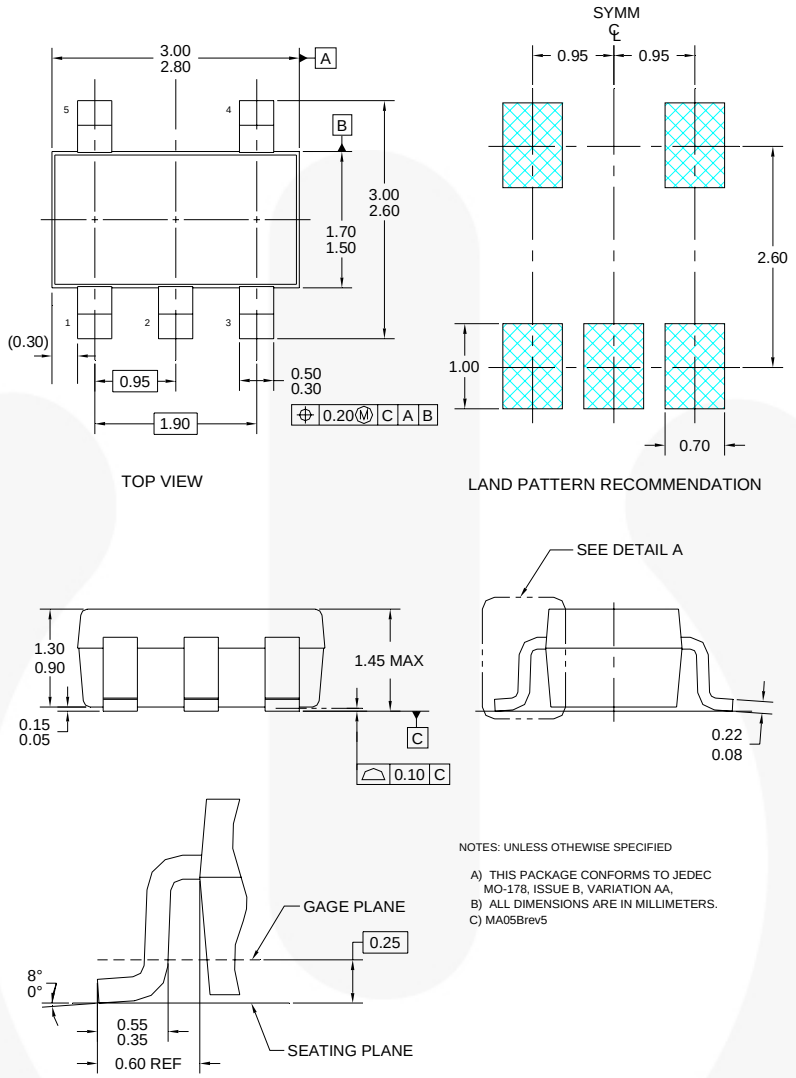

Figure 7. 5-Lead SOT23, JEDEC MO-178 1.6mm

Package drawings are provided as a service to customers considering Fairchild components. Drawings may change in any manner without notice. Please note the revision and/or date on the drawing and contact a Fairchild Semiconductor representative to verify or obtain the most recent revision. Package specifications do not expand the terms of Fairchild's worldwide terms and conditions, specifically the warranty therein, which covers Fairchild products.

Always visit Fairchild Semiconductor's online packaging area for the most recent package drawings: http://www.fairchildsemi.com/packaging/.

Tape and Reel Specifications

Please visit Fairchild Semiconductor's online packaging area for the most recent tape and reel specifications: http://www.fairchildsemi.com/packaging/SOT23-5L_tr.pdf.

Package Designator	Tape Section	Cavity Number	Cavity Status	Cover Type Status
M5X	Leader (Start End)	125 (Typical)	Empty	Sealed
	Carrier	3000	Filled	Sealed
	Trailer (Hub End)	75 (Typical)	Empty	Sealed

Physical Dimensions (Continued)

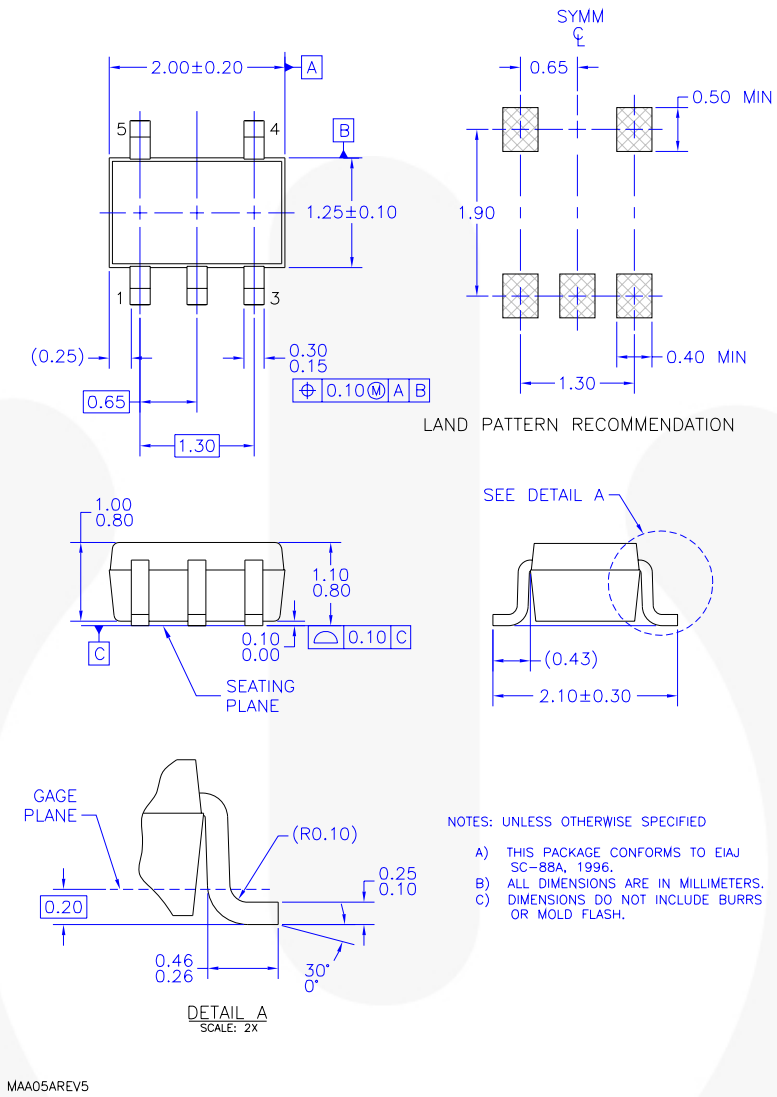

Figure 8. 5-Lead, SC70, EIAJ SC-88a, 1.25mm Wide

Package drawings are provided as a service to customers considering Fairchild components. Drawings may change in any manner without notice. Please note the revision and/or date on the drawing and contact a Fairchild Semiconductor representative to verify or obtain the most recent revision. Package specifications do not expand the terms of Fairchild's worldwide terms and conditions, specifically the warranty therein, which covers Fairchild products.

Always visit Fairchild Semiconductor's online packaging area for the most recent package drawings: http://www.fairchildsemi.com/packaging/.

Tape and Reel Specifications

Please visit Fairchild Semiconductor's online packaging area for the most recent tape and reel specifications: http://www.fairchildsemi.com/products/analog/pdf/sc70-5_tr.pdf.

Package Designator	Tape Section	Cavity Number	Cavity Status	Cover Type Status
P5X	Leader (Start End)	125 (Typical)	Empty	Sealed
	Carrier	3000	Filled	Sealed
	Trailer (Hub End)	75 (Typical)	Empty	Sealed

Physical Dimensions (Continued)

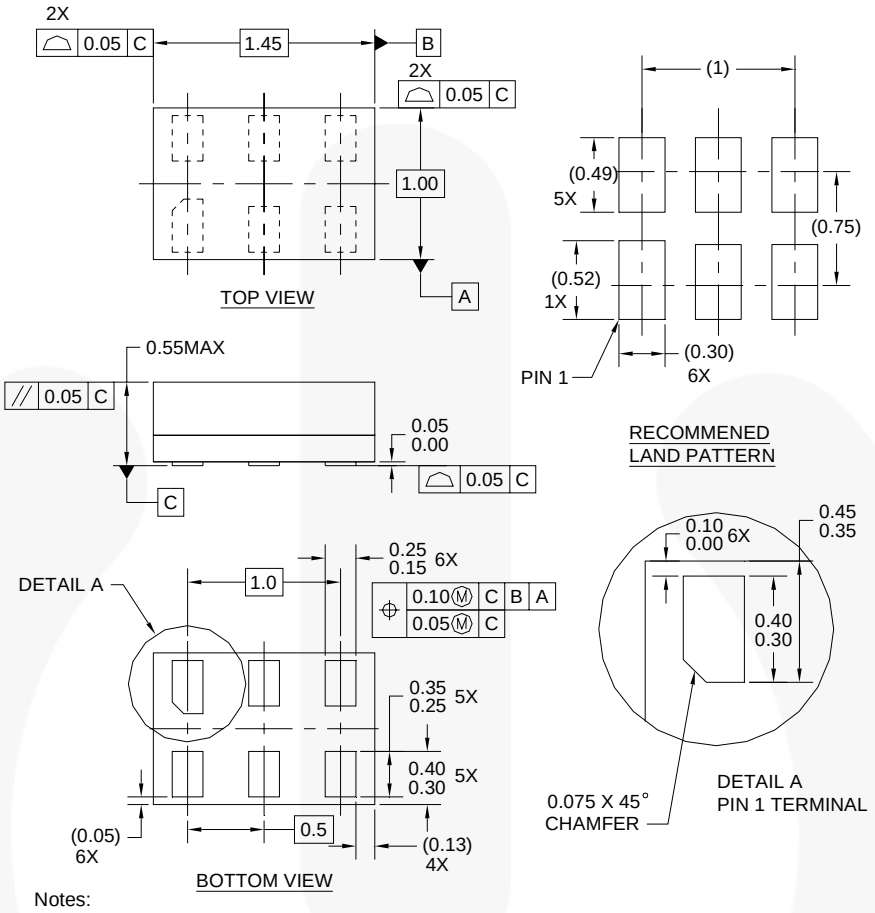

Notes:

1. CONFORMS TO JEDEC STANDARD M0-252 VARIATION UAAD
2. DIMENSIONS ARE IN MILLIMETERS
3. DRAWING CONFORMS TO ASME Y14.5M-1994

MAC06AREVC

Figure 9. 6-Lead, MicroPak™, 1.0mm Wide

Package drawings are provided as a service to customers considering Fairchild components. Drawings may change in any manner without notice. Please note the revision and/or date on the drawing and contact a Fairchild Semiconductor representative to verify or obtain the most recent revision. Package specifications do not expand the terms of Fairchild's worldwide terms and conditions, specifically the warranty therein, which covers Fairchild products.

Always visit Fairchild Semiconductor's online packaging area for the most recent package drawings: http://www.fairchildsemi.com/packaging/.

Tape and Reel Specification

Please visit Fairchild Semiconductor's online packaging area for the most recent tape and reel specifications: http://www.fairchildsemi.com/products/logic/pdf/micropak_tr.pdf.

Package Designator	Tape Section	Cavity Number	Cavity Status	Cover Type Status
L6X	Leader (Start End)	125 (Typical)	Empty	Sealed
	Carrier	5000	Filled	Sealed
	Trailer (Hub End)	75 (Typical)	Empty	Sealed

Physical Dimensions (Continued)

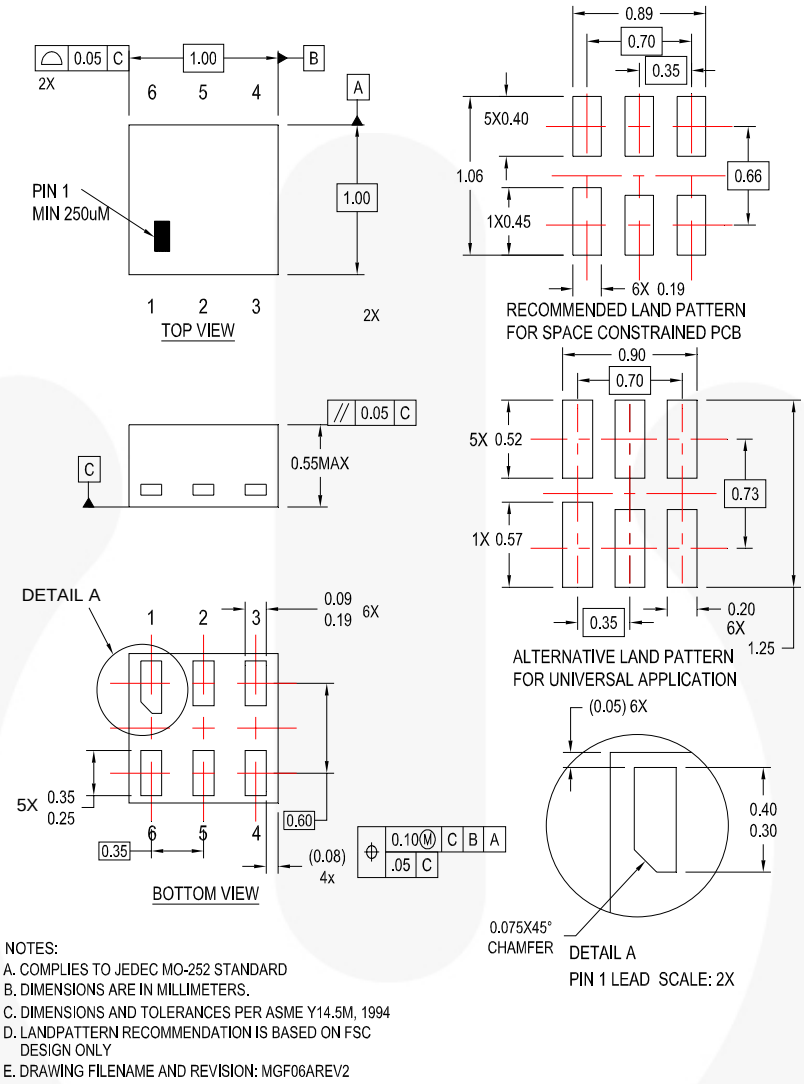

NOTES:
A. COMPLIES TO JEDEC MO-252 STANDARD
B. DIMENSIONS ARE IN MILLIMETERS.
C. DIMENSIONS AND TOLERANCES PER ASME Y14.5M, 1994
D. LANDPATTERN RECOMMENDATION IS BASED ON FSC DESIGN ONLY
E. DRAWING FILENAME AND REVISION: MGF06AREV2

Figure 10. 6-Lead, MicroPak2, 1x1mm Body, .35mm Pitch

Package drawings are provided as a service to customers considering Fairchild components. Drawings may change in any manner without notice. Please note the revision and/or date on the drawing and contact a Fairchild Semiconductor representative to verify or obtain the most recent revision. Package specifications do not expand the terms of Fairchild's worldwide terms and conditions, specifically the warranty therein, which covers Fairchild products.

Always visit Fairchild Semiconductor's online packaging area for the most recent package drawings: http://www.fairchildsemi.com/packaging/.

Tape and Reel Specification

Please visit Fairchild Semiconductor's online packaging area for the most recent tape and reel specifications: http://www.fairchildsemi.com/packaging/MicroPAK2_6L_tr.pdf.

Package Designator	Tape Section	Cavity Number	Cavity Status	Cover Type Status
FHX	Leader (Start End)	125 (Typical)	Empty	Sealed
	Carrier	5000	Filled	Sealed
	Trailer (Hub End)	75 (Typical)	Empty	Sealed

© 1996 Fairchild Semiconductor Corporation

FAIRCHILD SEMICONDUCTOR®

TRADEMARKS

The following includes registered and unregistered trademarks and service marks, owned by Fairchild Semiconductor and/or its global subsidiaries, and is not intended to be an exhaustive list of all such trademarks.

AccuPower™
Auto-SPM™
Build it Now™
CorePLUS™
CorePOWER™
CROSSVOLT™
CTL™
Current Transfer Logic™
DEUXPEED®
Dual Cool™
EcoSPARK®
EfficientMax™
®
Fairchild®
Fairchild Semiconductor®
FACT Quiet Series™
FACT®
FAST®
FastvCore™
FETBench™
FlashWriter®*
FPS™
F-PFS™
FRFET®
Global Power Resource℠
Green FPS™
Green FPS™ e-Series™
G*max*™
GTO™
IntelliMAX™
ISOPLANAR™
MegaBuck™
MICROCOUPLER™
MicroFET™
MicroPak™
MicroPak2™
MillerDrive™
MotionMax™
Motion-SPM™
OptoHiT™
OPTOLOGIC®
OPTOPLANAR®
®
PDP SPM™
Power-SPM™
PowerTrench®
PowerXS™
Programmable Active Droop™
QFET®
QS™
Quiet Series™
RapidConfigure™
™
Saving our world, 1mW/W/kW at a time™
SignalWise™
SmartMax™
SMART START™
SPM®
STEALTH™
SuperFET™
SuperSOT™-3
SuperSOT™-6
SuperSOT™-8
SupreMOS™
SyncFET™
Sync-Lock™
SYSTEM GENERAL®*
The Power Franchise®
the power franchise
TinyBoost™
TinyBuck™
TinyCalc™
TinyLogic®
TINYOPTO™
TinyPower™
TinyPWM™
TinyWire™
TriFault Detect™
TRUECURRENT™*
µSerDes™
µSerDes
UHC®
Ultra FRFET™
UniFET™
VCX™
VisualMax™
XS™

* Trademarks of System General Corporation, used under license by Fairchild Semiconductor.

DISCLAIMER

FAIRCHILD SEMICONDUCTOR RESERVES THE RIGHT TO MAKE CHANGES WITHOUT FURTHER NOTICE TO ANY PRODUCTS HEREIN TO IMPROVE RELIABILITY, FUNCTION, OR DESIGN. FAIRCHILD DOES NOT ASSUME ANY LIABILITY ARISING OUT OF THE APPLICATION OR USE OF ANY PRODUCT OR CIRCUIT DESCRIBED HEREIN; NEITHER DOES IT CONVEY ANY LICENSE UNDER ITS PATENT RIGHTS, NOR THE RIGHTS OF OTHERS. THESE SPECIFICATIONS DO NOT EXPAND THE TERMS OF FAIRCHILD'S WORLDWIDE TERMS AND CONDITIONS, SPECIFICALLY THE WARRANTY THEREIN, WHICH COVERS THESE PRODUCTS.

LIFE SUPPORT POLICY

FAIRCHILD'S PRODUCTS ARE NOT AUTHORIZED FOR USE AS CRITICAL COMPONENTS IN LIFE SUPPORT DEVICES OR SYSTEMS WITHOUT THE EXPRESS WRITTEN APPROVAL OF FAIRCHILD SEMICONDUCTOR CORPORATION.

As used herein:

1. Life support devices or systems are devices or systems which, (a) are intended for surgical implant into the body or (b) support or sustain life, and (c) whose failure to perform when properly used in accordance with instructions for use provided in the labeling, can be reasonably expected to result in a significant injury of the user.
2. A critical component in any component of a life support, device, or system whose failure to perform can be reasonably expected to cause the failure of the life support device or system, or to affect its safety or effectiveness.

ANTI-COUNTERFEITING POLICY

Fairchild Semiconductor Corporation's Anti-Counterfeiting Policy. Fairchild's Anti-Counterfeiting Policy is also stated on our external website, www.fairchildsemi.com, under Sales Support.

Counterfeiting of semiconductor parts is a growing problem in the industry. All manufacturers of semiconductor products are experiencing counterfeiting of their parts. Customers who inadvertently purchase counterfeit parts experience many problems such as loss of brand reputation, substandard performance, failed applications, and increased cost of production and manufacturing delays. Fairchild is taking strong measures to protect ourselves and our customers from the proliferation of counterfeit parts. Fairchild strongly encourages customers to purchase Fairchild parts either directly from Fairchild or from Authorized Fairchild Distributors who are listed by country on our web page cited above. Products customers buy either from Fairchild directly or from Authorized Fairchild Distributors are genuine parts, have full traceability, meet Fairchild's quality standards for handling and storage and provide access to Fairchild's full range of up-to-date technical and product information. Fairchild and our Authorized Distributors will stand behind all warranties and will appropriately address any warranty issues that may arise. Fairchild will not provide any warranty coverage or other assistance for parts bought from Unauthorized Sources. Fairchild is committed to combat this global problem and encourage our customers to do their part in stopping this practice by buying direct or from authorized distributors.

PRODUCT STATUS DEFINITIONS

Definition of Terms

Datasheet Identification	Product Status	Definition
Advance Information	Formative / In Design	Datasheet contains the design specifications for product development. Specifications may change in any manner without notice.
Preliminary	First Production	Datasheet contains preliminary data; supplementary data will be published at a later date. Fairchild Semiconductor reserves the right to make changes at any time without notice to improve design.
No Identification Needed	Full Production	Datasheet contains final specifications. Fairchild Semiconductor reserves the right to make changes at any time without notice to improve the design.
Obsolete	Not In Production	Datasheet contains specifications on a product that is discontinued by Fairchild Semiconductor. The datasheet is for reference information only.

Rev. I47

© 1996 Fairchild Semiconductor Corporation

AMEYA360
Components Supply Platform

Authorized Distribution Brand :

Website :

Welcome to visit www.ameya360.com

Contact Us :

- ## Address :

401 Building No.5, JiuGe Business Center, Lane 2301, Yishan Rd
Minhang District, Shanghai , China

- ## Sales :

Direct +86 (21) 6401-6692

Email amall@ameya360.com

QQ 800077892

Skype ameyasales1 ameyasales2

- ## Customer Service :

Email service@ameya360.com

- ## Partnership :

Tel +86 (21) 64016692-8333

Email mkt@ameya360.com