Ordering number : ENA0893

LV4910T

ON Semiconductor®

http://onsemi.com

Bi-CMOS LSI

Class-D Audio Power Amplifier BTL 2W x 2ch

Overview

LV4910T is a stereo digital amplifier for portable equipment, for example notebook-PC, portable DVD and portable mini-speakers. It is characterized by the use of an original feedback technology to improve sound quality though it is Class-D amplifier, and does not need the LC filter in the output stage.

Features

- D-class high-efficiency amplifier
- Low pop sound at SW changeover
- Differential input type

Functions

- 2W stereo digital power amplifier
- Standby switch
- Mute switch
- Various protective circuits (over-current protective, thermal protective, and under-voltage circuits) incorporated

Specifications

Absolute Maximum Ratings at Ta = 25°C

Parameter	Symbol	Conditions	Ratings	Unit
Maximum supply voltage	V_{CC} max		6	V
Allowable power dissipation	Pd max	as mounted on the substrate	1.05	W
Operating temperature	Topr		-20 to +75	°C
Storage temperature	Tstg		-40 to +150	°C

Stresses exceeding Maximum Ratings may damage the device. Maximum Ratings are stress ratings only. Functional operation above the Recommended Operating Conditions is not implied. Extended exposure to stresses above the Recommended Operating Conditions may affect device reliability.

Semiconductor Components Industries, LLC, 2013

Operating Conditions at Ta = 25°C

Parameter	Symbol	Conditions	Ratings	Unit
Recommended supply voltage	V_{CC}		5	V
Operation supply voltage range	V_{CC} opg		2.5 to 5.5	V
Recommended load resistance	R_L	Speaker	4	Ω

Electrical Characteristics Ta = 25°C, V_{CC} = 5V, f = 1kHz, R_L = 4Ω

Parameter	Symbol	Conditions	Ratings			Unit
			min	typ	max	
Standby current	Ist	Current at ST ON			1	μA
Current at no signal	$I_{CCO}1$	At LC filter-less		12	20	mA
Current at Mute	I_{CCO} mute	At Mute of speaker		10	16	mA
Voltage gain	VG	V_O = 0dBm	21	23	25	dB
Channel balance	ΔVG	V_O = 0dBm	-1	0	1	dB
Output power	P_O	THD = 10%		2		W
Total harmonic distortion	THD	P_O = 0.5W, DIN AUDIO		0.4	0.7	%
Output noise voltage	V_{NO}	Rg = 0, DIN AUDIO		100	200	μV
Crosstalk	CT	V_O = 0dBm, TUN 1kHz		-60	-40	dB
Ripple rejection ratio	RR	fr = 100Hz, Vr = -10dBm, TUN 100Hz		-40	-30	dB
Common mode rejection ratio	CMRR	V_O = 0dBm, DIN AUDIO		-60	-40	dB
Mute attenuation value	V_{OFF}	V_O = 0dBm, DIN AUDIO		-80	-70	dB
Oscillation frequency	F_{PWM}			300		kHz
Standby ON voltage sensitivity	V_{PWROFF}	Standby ON start voltage			1	V
Standby OFF voltage sensitivity	V_{PWRON}	Standby OFF start voltage	3			V
Mute ON voltage sensitivity	V_{MUTEON}	Mute ON start voltage			0.5	V
Mute OFF voltage sensitivity	$V_{MUTEOFF}$	Mute OFF start voltage	2			V

* Electrical characteristics vary depending on the substrate layout and selection of external parts.

For measurement of the above characteristics, the coil : 22μH (Toko Kabushiki Kaisha made D63CB) is used.

Package Dimensions

unit : mm (typ)

3259

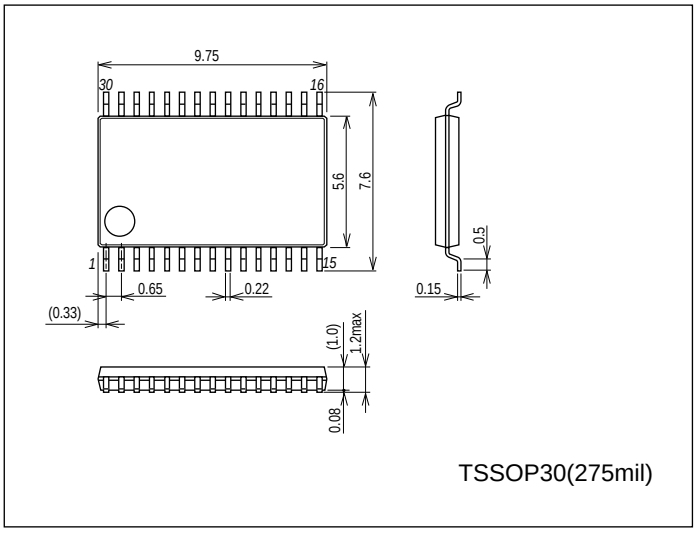

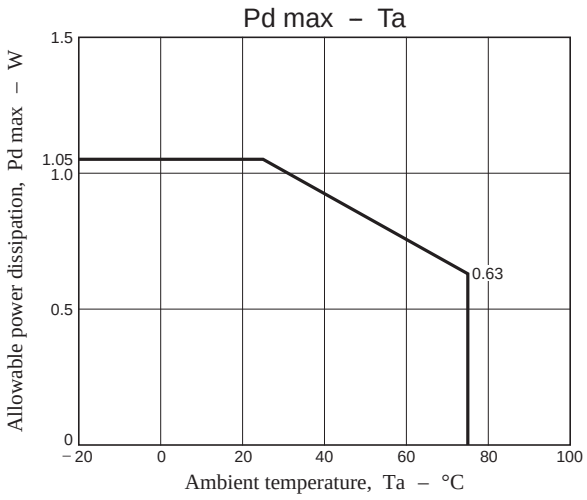

Block Diagram

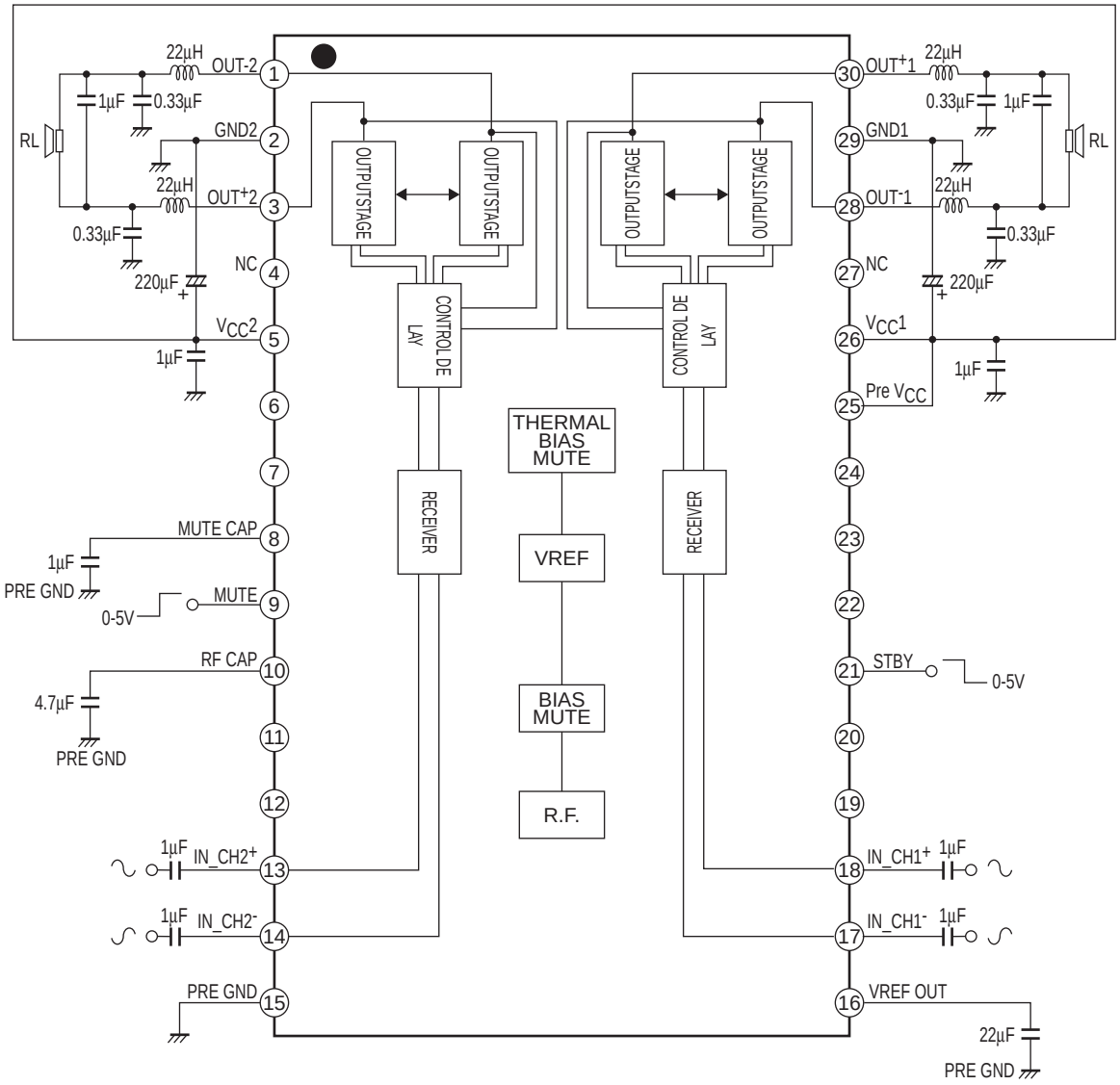

Pin Descriptions

Pin No.	Pin name	Pin voltage (V)	Pin description	Equivalent circuit
1 3 28 30	$OUT^{-}2$ $OUT^{+}2$ $OUT^{-}1$ $OUT^{+}1$	2.58	• Power outputs	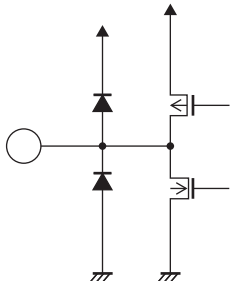
2	GND2	0		
4	NC		• Non-connection	
5	$V_{CC}2$	5		
6	NC		• Non-connection	
7	NC		• Non-connection	
8	MUTE CAP	4.9	• Connection for the mute switch On/Off impulse noise reduction capacitor	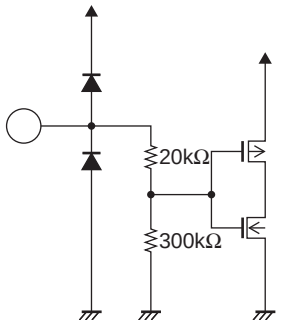
9	MUTE		• Mute On/Off switch • 2 to 5.5V : Mute Off • 0 to 0.7V : Mute On	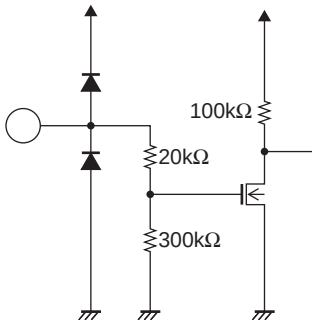
10	RF CAP	2.6	• Ripple filter reference	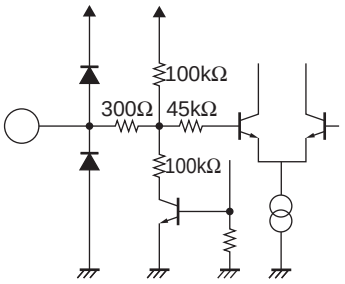
11	NC		• Non-connection	
12	NC		• Non-connection	
13 14 17 18	IN_ch2^{+} IN_ch2^{-} IN_ch1^{-} IN_ch1^{+}	2.4	• Signal input	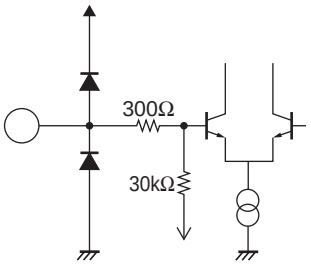

Continued on next page.

Continued from preceding page.

Pin No.	Pin name	Pin voltage (V)	Pin description	Equivalent circuit
15	PRE GND	0		
16	VREF OUT	2.55	• VREF amplifier reference	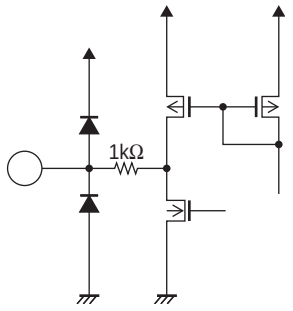
19	NC		• Non-connection	
20	NC		• Non-connection	
21	STBY		• STBY On/Off switch • 0 to 1V : Power Off • 3 to 5.5V : Power On	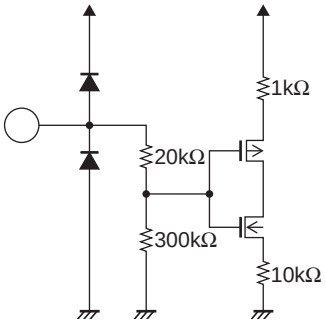
22	NC		• Non-connection	
23	NC		• Non-connection	
24	NC		• Non-connection	
25	PRE V_{CC}	5		
26	$V_{CC}1$	5		
27	NC		• Non-connection	
29	GND1	0		

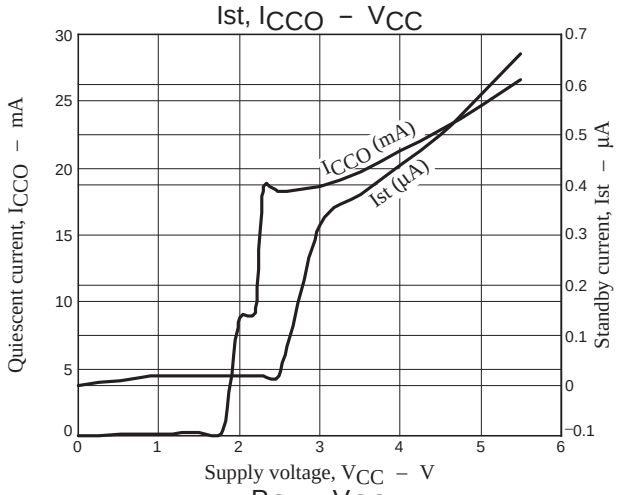
Ist, ICCO – VCC
Quiescent current, ICCO – mA
Standby current, Ist – µA
ICCO (mA)
Ist (µA)
Supply voltage, VCC – V

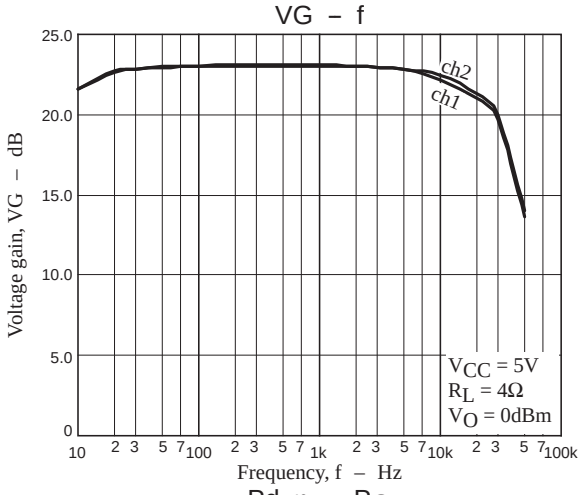
VG – f
Voltage gain, VG – dB
ch2
ch1
VCC = 5V
RL = 4Ω
VO = 0dBm
Frequency, f – Hz

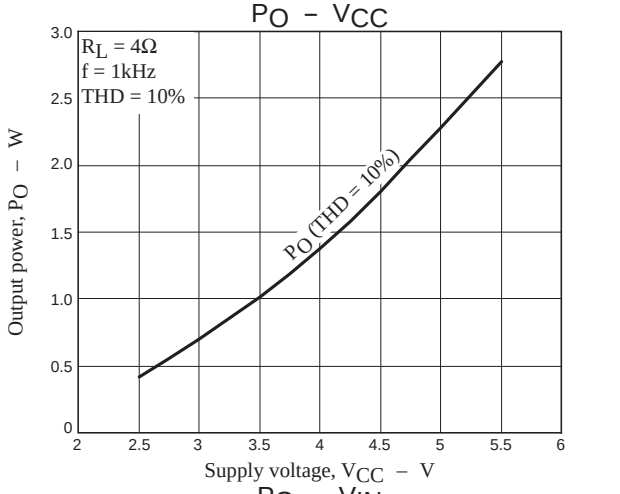
PO – VCC
RL = 4Ω
f = 1kHz
THD = 10%
PO (THD = 10%)
Output power, PO – W
Supply voltage, VCC – V

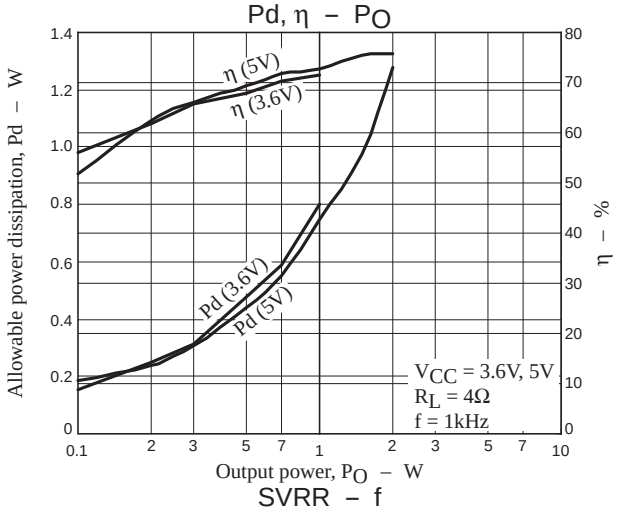
Pd, η – PO
η (5V)
η (3.6V)
Pd (3.6V)
Pd (5V)
VCC = 3.6V, 5V
RL = 4Ω
f = 1kHz
Allowable power dissipation, Pd – W
η – %
Output power, PO – W

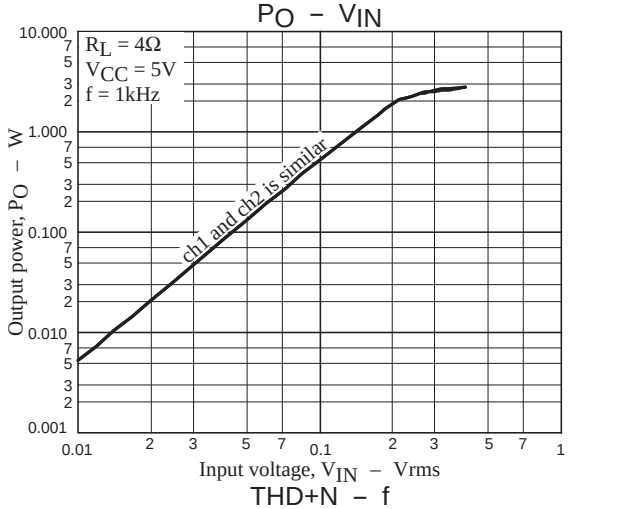
PO – VIN
RL = 4Ω
VCC = 5V
f = 1kHz
ch1 and ch2 is similar
Output power, PO – W
Input voltage, VIN – Vrms

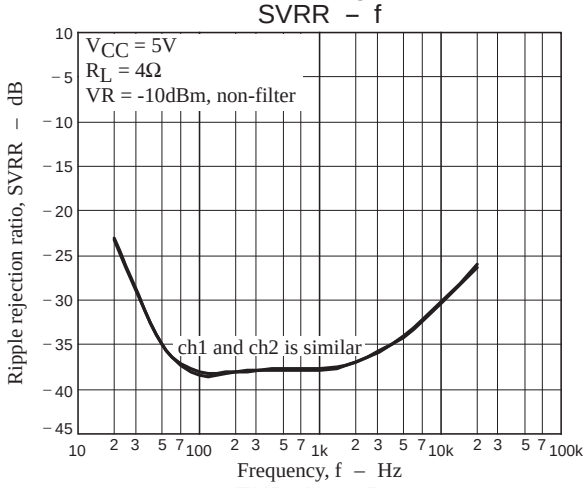
SVRR – f
VCC = 5V
RL = 4Ω
VR = -10dBm, non-filter
ch1 and ch2 is similar
Ripple rejection ratio, SVRR – dB
Frequency, f – Hz

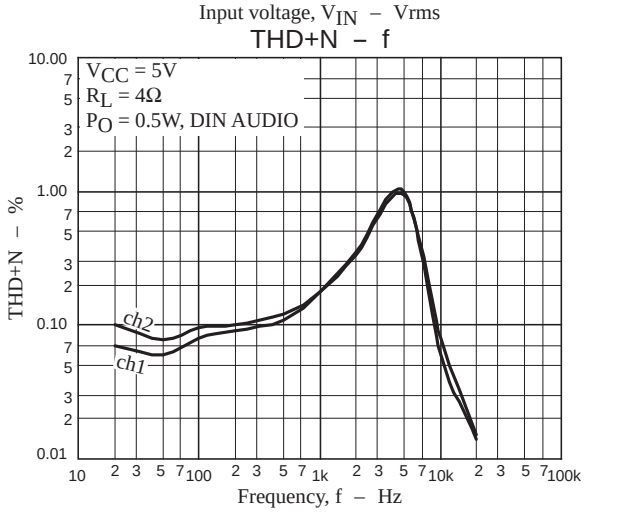
THD+N – f
VCC = 5V
RL = 4Ω
PO = 0.5W, DIN AUDIO
ch2
ch1
THD+N – %
Frequency, f – Hz

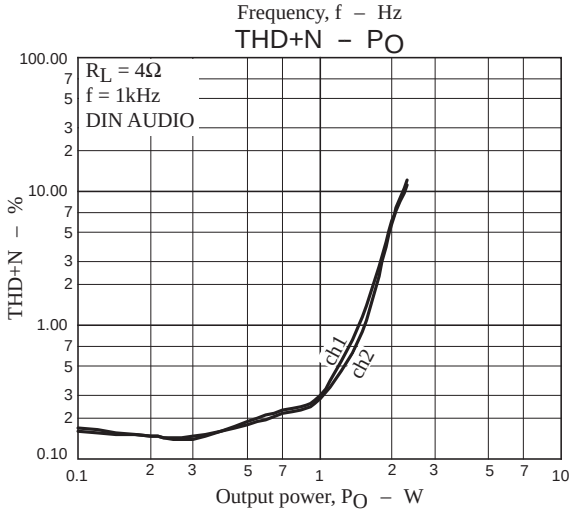
THD+N – PO
RL = 4Ω
f = 1kHz
DIN AUDIO
ch1
ch2
THD+N – %
Output power, PO – W

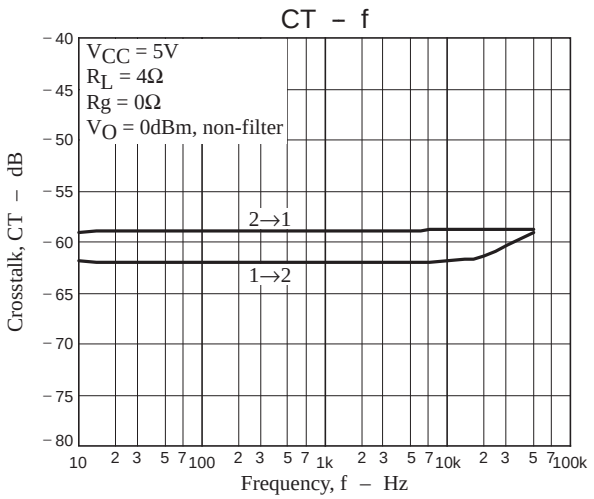

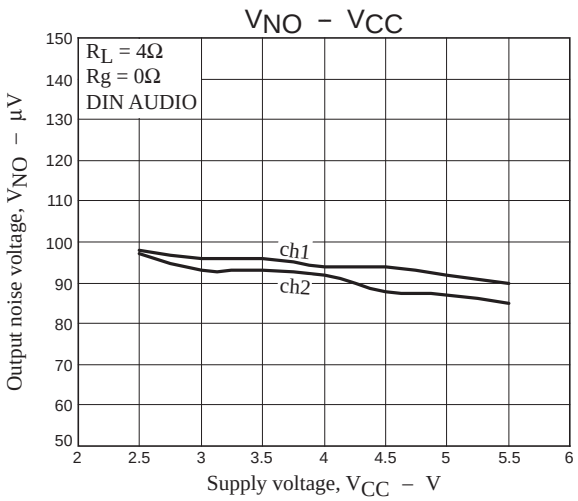

ON Semiconductor and the ON logo are registered trademarks of Semiconductor Components Industries, LLC (SCILLC). SCILLC owns the rights to a number of patents, trademarks, copyrights, trade secrets, and other intellectual property. A listing of SCILLC's product/patent coverage may be accessed at www.onsemi.com/site/pdf/Patent-Marking.pdf. SCILLC reserves the right to make changes without further notice to any products herein. SCILLC makes no warranty, representation or guarantee regarding the suitability of its products for any particular purpose, nor does SCILLC assume any liability arising out of the application or use of any product or circuit, and specifically disclaims any and all liability, including without limitation special, consequential or incidental damages. "Typical" parameters which may be provided in SCILLC data sheets and/or specifications can and do vary in different applications and actual performance may vary over time. All operating parameters, including "Typicals" must be validated for each customer application by customer's technical experts. SCILLC does not convey any license under its patent rights nor the rights of others. SCILLC products are not designed, intended, or authorized for use as components in systems intended for surgical implant into the body, or other applications intended to support or sustain life, or for any other application in which the failure of the SCILLC product could create a situation where personal injury or death may occur. Should Buyer purchase or use SCILLC products for any such unintended or unauthorized application, Buyer shall indemnify and hold SCILLC and its officers, employees, subsidiaries, affiliates, and distributors harmless against all claims, costs, damages, and expenses, and reasonable attorney fees arising out of, directly or indirectly, any claim of personal injury or death associated with such unintended or unauthorized use, even if such claim alleges that SCILLC was negligent regarding the design or manufacture of the part. SCILLC is an Equal Opportunity/Affirmative Action Employer. This literature is subject to all applicable copyright laws and is not for resale in any manner.

AMEYA360
Components Supply Platform

Authorized Distribution Brand :

Website :

Welcome to visit www.ameya360.com

Contact Us :

- ### Address :

  401 Building No.5, JiuGe Business Center, Lane 2301, Yishan Rd
  Minhang District, Shanghai , China

- ### Sales :

  Direct +86 (21) 6401-6692

  Email amall@ameya360.com

  QQ 800077892

  Skype ameyasales1 ameyasales2

- ### Customer Service :

  Email service@ameya360.com

- ### Partnership :

  Tel +86 (21) 64016692-8333

  Email mkt@ameya360.com