REV.	DATE	DESCRIPTION
A	08/31/04	UPDATE DRAWING FORMAT

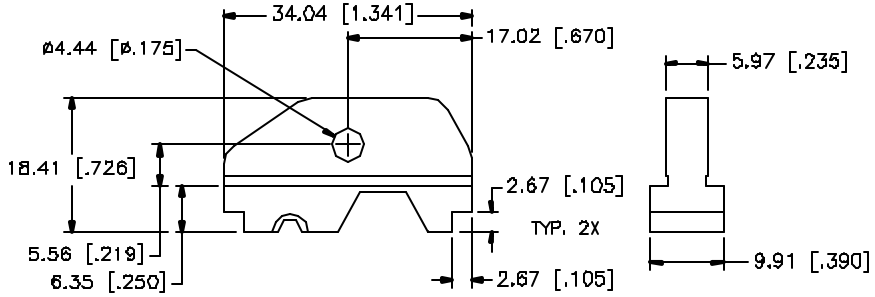

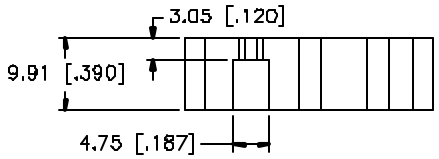

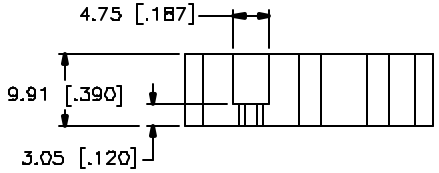

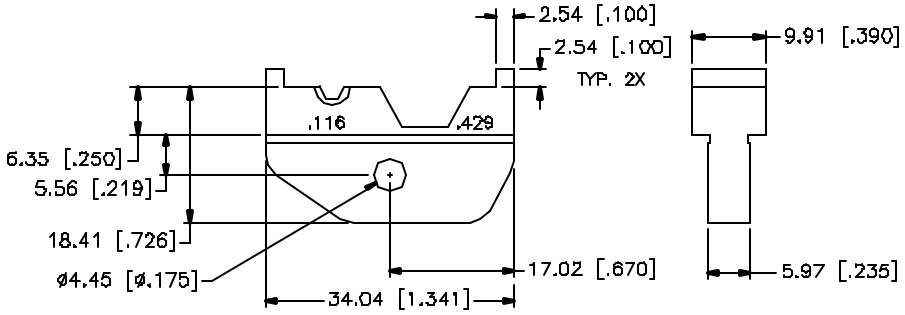

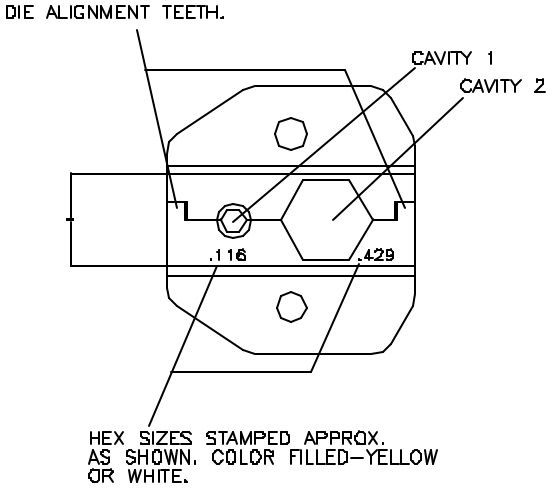

CAVITY NO.	DIM. ACROSS HEX FLATS	GROOVE ACCOMMODATIONS
1	$.116^{+.000}_{-.003}$	CENTER CONTACT
2	$.429^{+.000}_{-.003}$	BELDEN 9913, 9914

	DESCRIPTION	MATERIAL	FINISH	QTY
8				
7				
6				
5				
4				
3				
2				
1	DIE BODY	CAST STEEL	BLK. OXIDE	

UNLESS OTHERWISE SPECIFIED DIMENSIONS ARE IN MILLIMETERS. DIMENSIONS IN [ ] ARE IN INCHES AND FOR CUSTOMER REFERENCE ONLY.

UNLESS OTHERWISE SPECIFIED TOLERANCES FOR MILLIMETERS ARE:
0.5 – 6mm ± 0.20mm
6 – 30mm ± 0.40mm
30 – 120mm ± 0.50mm

UNLESS OTHERWISE SPECIFIED TOLERANCES FOR INCHES ARE:
.020 – .315 = ± 0.007"
.315 – 1.180 = ± 0.015"
1.180 – 4.724 = ± 0.020"

DO NOT SCALE DRAWING

APPROVALS		DATE
DRAWN	G.R.S.	08/31/04
CHECKED		
ISSUED		
SHEET	1 OF 1	

CAD FILE C:/MISC/47–20027.DWG

Amphenol Connex

PART DESCRIPTION: CRIMP DIE SET

PART NO.: 47–20027

DWG. NO.: 47–20027.DWG | REV. A | SIZE A | SCALE NA

AMEYA360
Components Supply Platform

Authorized Distribution Brand :

Website :

Welcome to visit www.ameya360.com

Contact Us :

- ### Address :

  401 Building No.5, JiuGe Business Center, Lane 2301, Yishan Rd
  Minhang District, Shanghai , China

- ### Sales :

  Direct +86 (21) 6401-6692

  Email amall@ameya360.com

  QQ 800077892

  Skype ameyasales1 ameyasales2

- ### Customer Service :

  Email service@ameya360.com

- ### Partnership :

  Tel +86 (21) 64016692-8333

  Email mkt@ameya360.com