| REV. | DATE | DESCRIPTION |
|---|---|---|
| NC | 02/23/06 | INITIAL RELEASE |

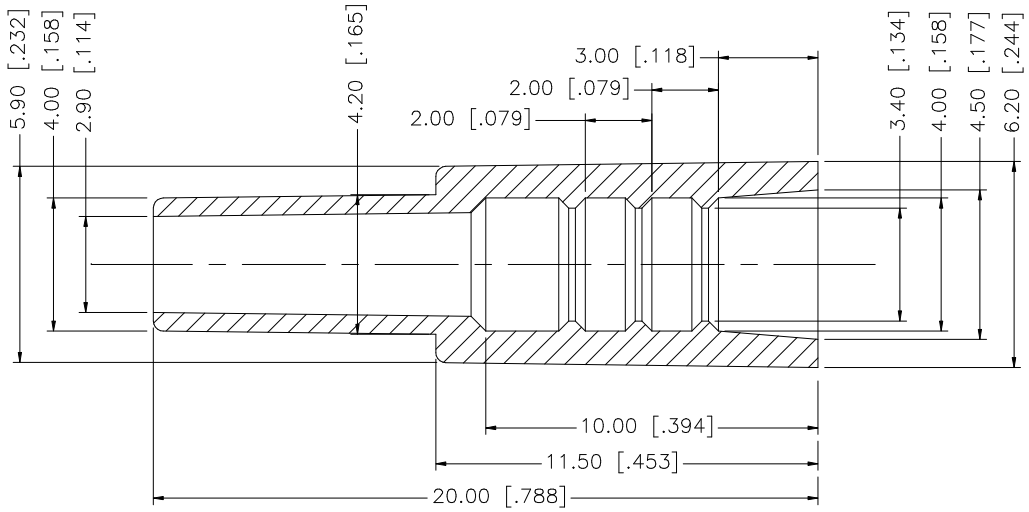


| | | | | |
|---|---|---|---|---|
| 8 | | | | |
| 7 | | | | |
| 6 | | | | |
| 5 | | | | |
| 4 | | | | |
| 3 | | | | |
| 2 | | | | |
| 1 | STRAIN RELIEF | PVC | OPTIONAL | 1 |
| | DESCRIPTION | MATERIAL | FINISH | QTY |

UNLESS OTHERWISE SPECIFIED DIMENSIONS ARE IN MILLIMETERS. DIMENSIONS IN [ ] ARE IN INCHES AND FOR CUSTOMER REFERANCE ONLY.

UNLESS OTHERWISE SPECIFIED TOLERANCES FOR MILLIMETERS ARE:

0.5 – 8mm ± 0.20mm
8 – 30mm ± 0.40mm
30 – 120mm ± 0.50mm

UNLESS OTHERWISE SPECIFIED TOLERANCES FOR INCHES ARE:

.020 – .315 = ± 0.007"
.315 – 1.180 = ± 0.015"
1.180 – 4.724 = ± 0.020"

DO NOT SCALE DRAWING

| APPROVALS | | DATE |
|---|---|---|
| DRAWN | G.R.S. | 02/23/06 |
| CHECKED | | |
| ISSUED | | |
| SHEET | 1 OF 1 | |

CAD FILE C:/MISC/60052-000.DWG

**Amphenol Connex**

PART DESCRIPTION: STRAIN RELIEF BOOT

PART NO. 60052-000

| DWG. NO. | REV. | SIZE | SCALE |
|---|---|---|---|
| 60052-000.DWG | NC | A | NA |

# AMEYA360
Components Supply Platform

## Authorized Distribution Brand :

## Website :

Welcome to visit www.ameya360.com

## Contact Us :

- ### Address :

  401 Building No.5, JiuGe Business Center, Lane 2301, Yishan Rd
  Minhang District, Shanghai , China

- ### Sales :

  Direct +86 (21) 6401-6692

  Email amall@ameya360.com

  QQ 800077892

  Skype ameyasales1 ameyasales2

- ### Customer Service :

  Email service@ameya360.com

- ### Partnership :

  Tel +86 (21) 64016692-8333

  Email mkt@ameya360.com