THIS DOCUMENT IS THE PROPERTY OF KEYSTONE ELECTRONICS CORP. AND SHALL NOT BE REPRODUCED, DISTRIBUTED OR USED AS A BASIS FOR MANUFACTURE WITHOUT PRIOR WRITTEN PERMISSION FROM KEYSTONE ELECTRONICS CORP.

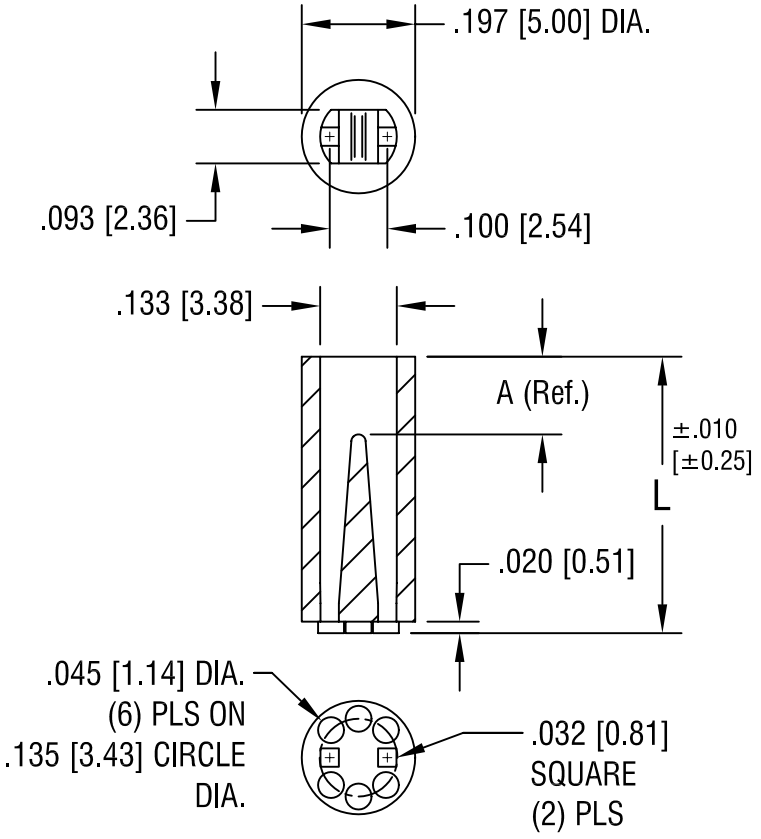

PART NO.	'L' DIM.	'A' DIM. REF.
7367	.400 [10.16]	.075 [1.91]
7368	.420 [10.67]	.095 [2.41]
7369	.440 [11.18]	.115 [2.92]
7370	.450 [11.43]	.120 [3.05]
7371	.460 [11.68]	.135 [3.43]
7372	.480 [12.19]	.145 [3.68]
7373	.500 [12.70]	.055 [1.40]
7374	.550 [13.97]	.095 [2.41]
7375	.600 [15.24]	.150 [3.81]
7376	.650 [16.51]	.075 [1.91]
7377	.700 [17.78]	.120 [3.05]
7378	.750 [19.05]	.055 [1.40]
7379	.800 [20.32]	.110 [2.79]
7380	.850 [21.59]	.160 [4.06]
7381	.900 [22.86]	.200 [5.08]
7382	.925 [23.50]	.230 [5.84]

DATE	DESCRIPTION	REV.
5.4.99	CHANGE AS PER ECN 99-044	B
3.18.99	CHANGE AS PER ECN 99-027	A

KEYSTONE ELECTRONICS CORP.
ASTORIA, N.Y. 11105-2017

PART NAME: BI-LEAD LED SPACER, T-1

MATERIAL: NYLON 6/6

FINISH: -

DRN BY: BOONE | DATE: 10.8.96

APP'D: LN | SCALE: 3X

TOLERANCES INCH [MM]
DECIMAL ± .005 [± 0.15]
ANGULAR ± 1°
UNLESS OTHERWISE SPECIFIED

CODE: C/M

DWG NO. 7367-7382

AMEYA360
Components Supply Platform

Authorized Distribution Brand :

Website :

Welcome to visit www.ameya360.com

Contact Us :

- ### Address :

  401 Building No.5, JiuGe Business Center, Lane 2301, Yishan Rd
  Minhang District, Shanghai , China

- ### Sales :

  Direct +86 (21) 6401-6692

  Email amall@ameya360.com

  QQ 800077892

  Skype ameyasales1 ameyasales2

- ### Customer Service :

  Email service@ameya360.com

- ### Partnership :

  Tel +86 (21) 64016692-8333

  Email mkt@ameya360.com