molex
one company › a world of innovation

This document was generated on 02/02/2015

PLEASE CHECK WWW.MOLEX.COM FOR LATEST PART INFORMATION

Part Number: 52852-0870

Status: Active

Overview: FFC-FPC (SMT)

Description: 1.00mm Pitch Easy-On™ Type FFC/FPC Connector, Surface Mount, Right Angle, Non-ZIF, Bottom Contact Style Receptacle, 8 Circuits

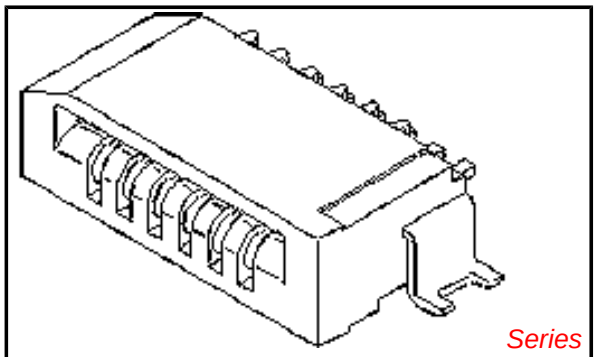

image - Reference only

Documents:

3D Model
Drawing (PDF)
Product Specification PS-52852-014 (PDF)
Packaging Specification SPK-52852-001 (PDF)
RoHS Certificate of Compliance (PDF)

Agency Certification

CSA	LR19980
UL	E29179

General

Product Family	FFC/FPC Connectors
Series	52852
Overview	FFC-FPC (SMT)
Product Name	Easy-On™
UPC	822348123001

Physical

Circuits (Loaded)	8
Circuits (maximum)	8
Contact Position	Bottom
Durability (mating cycles max)	10
Entry Angle	90° Angle
Flammability	94V-0
Mated Height	3.10mm
Material - Metal	Phosphor Bronze
Material - Plating Mating	Tin-Bismuth
Material - Plating Termination	Tin-Bismuth
Net Weight	273.000/mg
Number of Rows	1
Orientation	Right Angle
PCB Locator	No
PCB Retention	Yes
Packaging Type	Embossed Tape on Reel
Pitch - Mating Interface	1.00mm
Pitch - Termination Interface	1.00mm
Plating min - Mating	1.016µm
Plating min - Termination	1.016µm
Polarized to PCB	No
Stackable	No
Surface Mount Compatible (SMC)	Yes
Temperature Range - Operating	-20°C to +80°C
Termination Interface: Style	Surface Mount
Wire/Cable Type	FFC/FPC

Electrical

Current - Maximum per Contact	0.5A
Voltage - Maximum	50V AC (RMS)/DC

Material Info

Reference - Drawing Numbers

EU RoHS
ELV and RoHS Compliant
REACH SVHC
Contains SVHC: No
Low-Halogen Status
Not Low-Halogen

China RoHS

Need more information on product environmental compliance?

Email productcompliance@molex.com
For a multiple part number RoHS Certificate of Compliance, click here

Please visit the Contact Us section for any non-product compliance questions.

Search Parts in this Series
52852Series

Mates With
Molex Premo-Flex FFC. Be sure to match like plating

Packaging Specification	SPK-52852-001
Product Specification	PS-52852-014, RPS-52852-017, RPS-52852-018, RPS-52852-019, RPS-52852-022, RPS-52852-023, RPS-52852-025
Sales Drawing	SD-52852-010, SD-52852-011

This document was generated on 02/02/2015

PLEASE CHECK WWW.MOLEX.COM FOR LATEST PART INFORMATION

AMEYA360
Components Supply Platform

Authorized Distribution Brand :

Website :

Welcome to visit www.ameya360.com

Contact Us :

- **Address :**

  401 Building No.5, JiuGe Business Center, Lane 2301, Yishan Rd
  Minhang District, Shanghai , China

- **Sales :**

  Direct +86 (21) 6401-6692

  Email amall@ameya360.com

  QQ 800077892

  Skype ameyasales1 ameyasales2

- **Customer Service :**

  Email service@ameya360.com

- **Partnership :**

  Tel +86 (21) 64016692-8333

  Email mkt@ameya360.com