STEVAL-ILD003V2

Analog wall dimmer for CFL/LED lamps based on the TS820 (USA version 110 V)

Data brief

Features

- Operation for 2-wire wall dimmer
- Leading-edge control (compatible with all lamps commonly found on the market)
- Operation on 120 V line rms voltage (98 to 132 V) and 50 Hz or 60 Hz line frequency
- Dimmable power range with halogen, CFL and LED lamps (with 27 °C/W heatsinks mounted on SCRs[a] [b]:
  - 3 to 350 W for 110/120 V rms line
- Maximum operating ambient temperature:60 °C
- Power efficiency @ 350 W / 120 V > 98.5%
- Standby losses @ 120 V < 0.3 W (could be reduced to 0 if potentiometer features a mechanical switch to open the circuit at minimum setting)
- RoHS compliant

Compliance with EMC standards

- IEC 61000-4-4: criteria A for more than 4 kV

Description

The STEVAL-ILD003V2 demonstration board is designed to propose a low-cost analog dimmer topology using a sensitive SCR TS820-600FP. The dimmer can drive typical low-consumption lamps, particularly CFL and LED dimmable lamps.

Through-hole technology is used for the most important components such as LC filter, gate resistor, turn-on delay capacitor, etc., in order to allow board modification, if needed.

STEVAL-ILD003V2

The STEVAL-ILD003V2 eliminates flickering thanks to its continuous current applied through the sensitive SCR gate. This dimmer could easily replace a standard low-cost analog Triac light dimmer using a Diac-controlled circuit.

a. Higher power can be reached with a different filter inductor and a bigger SCR heatsink

b. 200 W is the maximum allowed power without an SCR heatsink

For further information contact your local STMicroelectronics sales office. www.st.com

1 Circuit schematic

Figure 1. STEVAL-ILD003V2 schematic

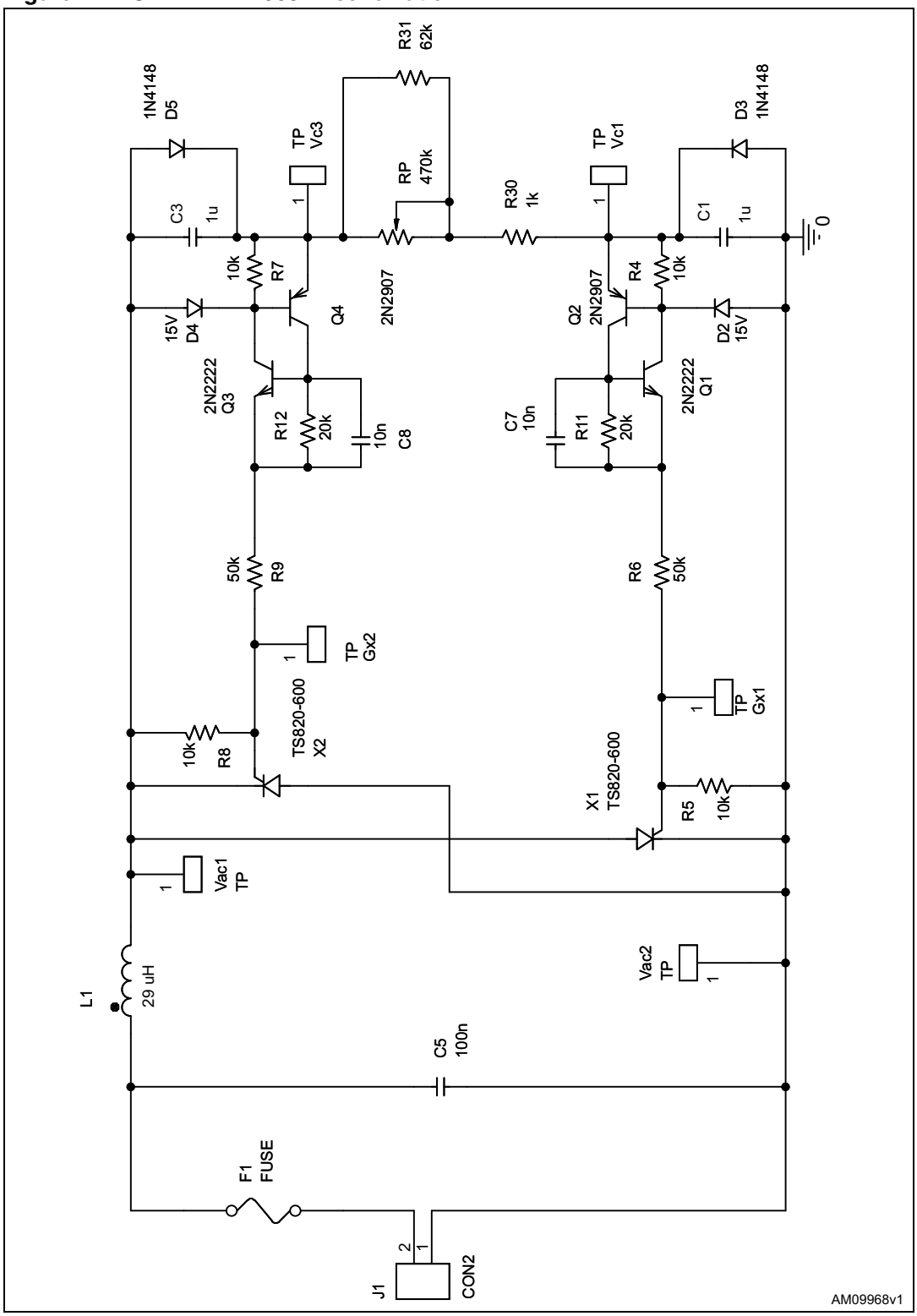

2 Revision history

Table 1. Document revision history

Date	Revision	Changes
11-Nov-2011	1	Initial release.
26-Mar-2012	2	Changed board image on cover page
15-Feb-2013	3	Updated features on cover page

Please Read Carefully:

Information in this document is provided solely in connection with ST products. STMicroelectronics NV and its subsidiaries (“ST”) reserve the right to make changes, corrections, modifications or improvements, to this document, and the products and services described herein at any time, without notice.

All ST products are sold pursuant to ST’s terms and conditions of sale.

Purchasers are solely responsible for the choice, selection and use of the ST products and services described herein, and ST assumes no liability whatsoever relating to the choice, selection or use of the ST products and services described herein.

No license, express or implied, by estoppel or otherwise, to any intellectual property rights is granted under this document. If any part of this document refers to any third party products or services it shall not be deemed a license grant by ST for the use of such third party products or services, or any intellectual property contained therein or considered as a warranty covering the use in any manner whatsoever of such third party products or services or any intellectual property contained therein.

UNLESS OTHERWISE SET FORTH IN ST’S TERMS AND CONDITIONS OF SALE ST DISCLAIMS ANY EXPRESS OR IMPLIED WARRANTY WITH RESPECT TO THE USE AND/OR SALE OF ST PRODUCTS INCLUDING WITHOUT LIMITATION IMPLIED WARRANTIES OF MERCHANTABILITY, FITNESS FOR A PARTICULAR PURPOSE (AND THEIR EQUIVALENTS UNDER THE LAWS OF ANY JURISDICTION), OR INFRINGEMENT OF ANY PATENT, COPYRIGHT OR OTHER INTELLECTUAL PROPERTY RIGHT.

UNLESS EXPRESSLY APPROVED IN WRITING BY TWO AUTHORIZED ST REPRESENTATIVES, ST PRODUCTS ARE NOT RECOMMENDED, AUTHORIZED OR WARRANTED FOR USE IN MILITARY, AIR CRAFT, SPACE, LIFE SAVING, OR LIFE SUSTAINING APPLICATIONS, NOR IN PRODUCTS OR SYSTEMS WHERE FAILURE OR MALFUNCTION MAY RESULT IN PERSONAL INJURY, DEATH, OR SEVERE PROPERTY OR ENVIRONMENTAL DAMAGE. ST PRODUCTS WHICH ARE NOT SPECIFIED AS "AUTOMOTIVE GRADE" MAY ONLY BE USED IN AUTOMOTIVE APPLICATIONS AT USER’S OWN RISK.

Resale of ST products with provisions different from the statements and/or technical features set forth in this document shall immediately void any warranty granted by ST for the ST product or service described herein and shall not create or extend in any manner whatsoever, any liability of ST.

ST and the ST logo are trademarks or registered trademarks of ST in various countries.

Information in this document supersedes and replaces all information previously supplied.

The ST logo is a registered trademark of STMicroelectronics. All other names are the property of their respective owners.

© 2013 STMicroelectronics - All rights reserved

STMicroelectronics group of companies

Australia - Belgium - Brazil - Canada - China - Czech Republic - Finland - France - Germany - Hong Kong - India - Israel - Italy - Japan - Malaysia - Malta - Morocco - Philippines - Singapore - Spain - Sweden - Switzerland - United Kingdom - United States of America

www.st.com

AMEYA360
Components Supply Platform

Authorized Distribution Brand :

Website :

Welcome to visit www.ameya360.com

Contact Us :

- ### Address :

  401 Building No.5, JiuGe Business Center, Lane 2301, Yishan Rd
  Minhang District, Shanghai , China

- ### Sales :

  Direct +86 (21) 6401-6692

  Email amall@ameya360.com

  QQ 800077892

  Skype ameyasales1 ameyasales2

- ### Customer Service :

  Email service@ameya360.com

- ### Partnership :

  Tel +86 (21) 64016692-8333

  Email mkt@ameya360.com