Wire Stripper 734185-1

ORIGINAL INSTRUCTIONS

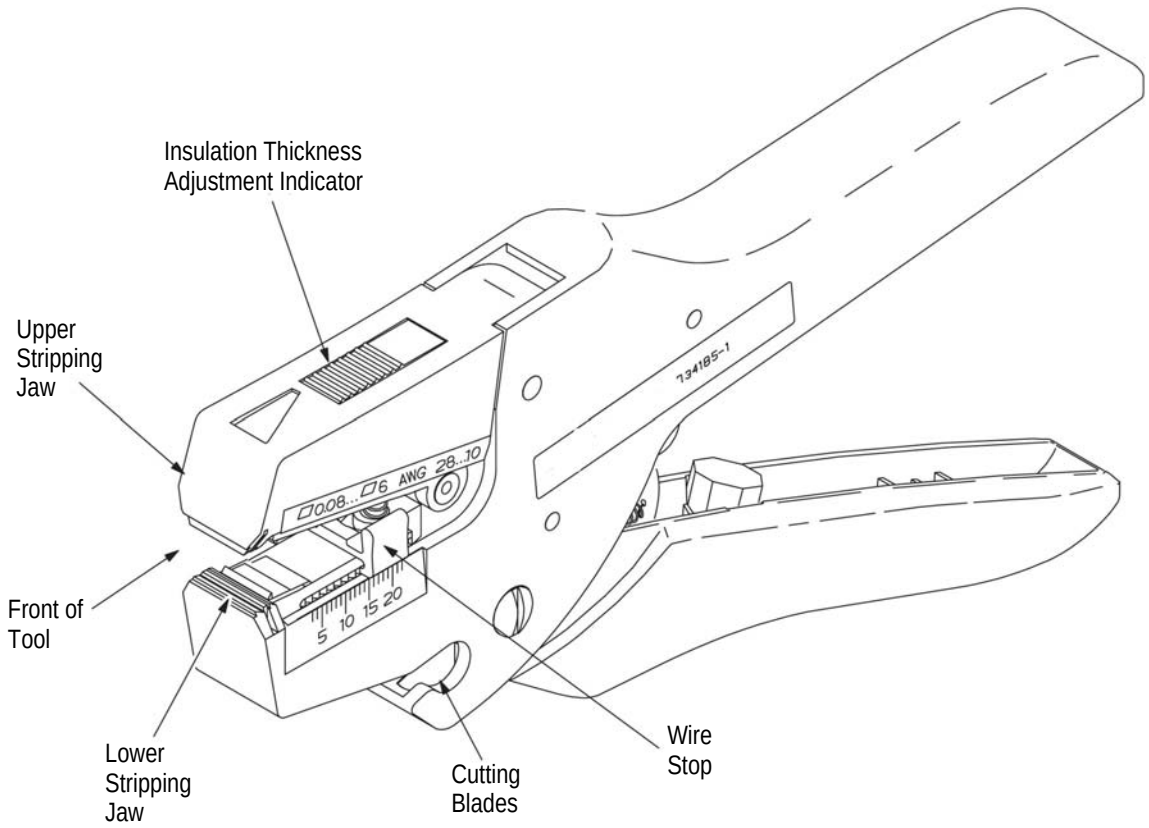

Figure 1

1. INTRODUCTION

Wire Stripper 734185-1 is designed to strip wire sizes 28-10 AWG. Read these instructions thoroughly before using the tool.

NOTE

All dimensions on this document are in metric units [with U.S. customary units in brackets].

2. DESCRIPTION

The tool, which has a retracting jaw type hand operated wire stripper, automatically strips wire sizes 28-10 AWG with minor adjustments. Wire ends can be stripped up to 16 mm [.625 in.].

3. WIRE CUTTING AND STRIPPING

NOTE

For proper operation of the tool, jaws and insulation must be free of lubrication.

1. Insert wire into the cutting blades and squeeze handles to cut. See Figure 1.

DANGER

Keep fingers away from blades at all times.

2. To strip insulation, adjust the stripping blade depth for the insulation thickness at the top of the tool. Slide the insulation thickness adjustment regulator as follows:

- Thin-Rear Position (toward handles)
- Normal-Center Position
- Thick-Forward Position

3. To adjust the strip length, move the wire stop by squeezing the top tabs with fingers and sliding wire stop to the desired measured wire length. Refer to Figure 2.

©2011 Tyco Electronics Corporation, Berwyn, PA
All Rights Reserved
TE logo and Tyco Electronics are trademarks.
*Trademark. Other products, logos, and company names might be trademarks of their respective owners.

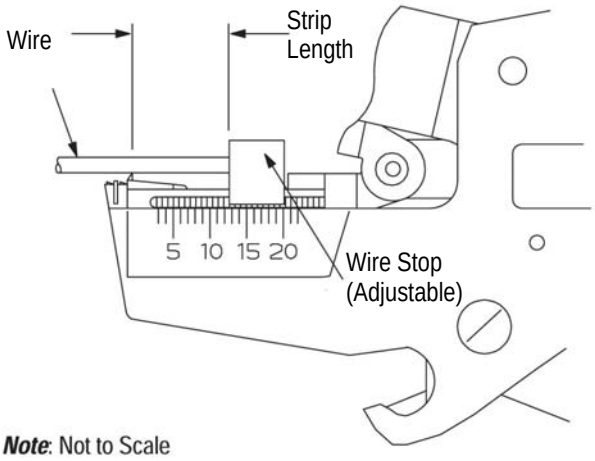

Figure 2

4. To strip wire, insert wire into front of tool until it makes contact with the wire stop.

5. Squeeze handle firmly while holding wire stationary.

6. Re-adjust the insulation thickness adjustment regulator and wire stop if necessary.

4. MAINTENANCE AND INSPECTION

Wire Stripper 734185-1 requires no special maintenance. After use, remove stripped wire and check to ensure insulation slug has been ejected from the jaws. Store tool in a clean, dry area.

If the stripping jaws are damaged, replace with Wire Stripper Blade Assembly 1424946-1. See Figure 3. For ordering information, refer to Section 6, ORDERING INFORMATION / REPLACEMENT PARTS.

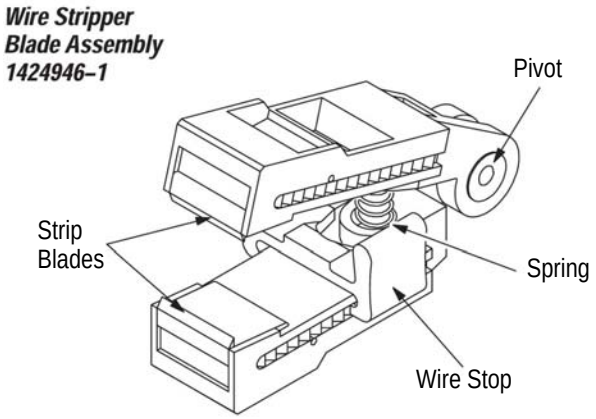

Figure 3

5. REMOVAL / INSTALLATION OF REPLACEMENT JAWS

5.1. Jaw Removal (Figure 4 and Figure 5)

1. Open the jaws and position the tool as shown in Figure 4.

2. Remove the wire stop by squeezing the top tabs together and lifting the stop from the jaws.

3. Remove the upper stripping jaw by positioning a screwdriver (on the label side of the tool) between the tool housing and the jaw.

4. Rotate the screwdriver clockwise and disengage the upper stripping jaw from the pivot.

5. Remove the upper stripping jaw and the spring.

6. Remove the lower stripping jaw by positioning a screwdriver near the rear of the lower jaw. Using a clockwise twisting motion, loosen and remove the jaw from the pivot pin.

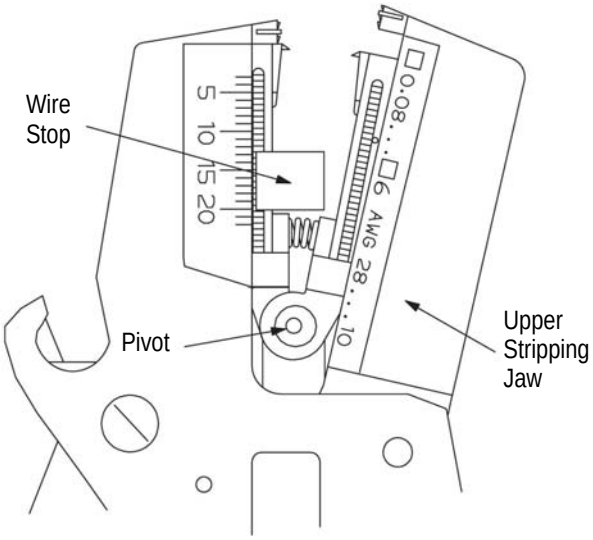

Figure 4

5.2. Jaw Installation (Figure 6)

1. Install the lower stripping jaw, with the pivot pin.

2. Position the spring into the throat of the lower stripping jaw.

3. Position the upper stripping jaw, about 90_ to the upper tool housing, with the pivot hole end towards you.

DANGER

WEAR SAFETY EYE PROTECTION when installing the compressed spring as instructed in Steps 4 through 6.

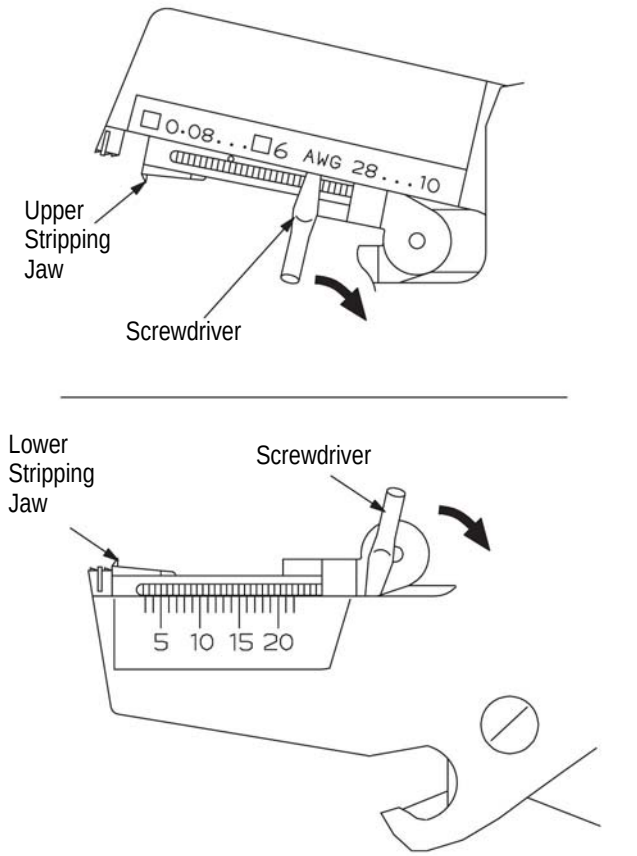

Figure 5

4. Insert the spring into the upper stripping jaw by bending it at an angle as shown in Figure 6.

5. While maintaining spring pressure, rotate the upper stripping jaw pivot counterclockwise, and engage the pivot pin.

6. Ensure that the upper stripping jaw is in proper position in the tool housing.

7. Replace the wire stop.

6. ORDERING INFORMATION / REPLACEMENT PARTS

The only part that is replaceable is Wire Stripper Blade Assembly 1424946-1. Order this part or additional wire strippers through your TE Connectivity Representative, or call 1-800-526-5142, or send a facsimile of your purchase order to 717-986-7605, or write to:

CUSTOMER SERVICE (038-035)
TYCO ELECTRONICS CORPORATION
PO BOX 3608
HARRISBURG PA 17105-3608

7. REVISION SUMMARY

- Deleted text in Section 2, DESCRIPTION

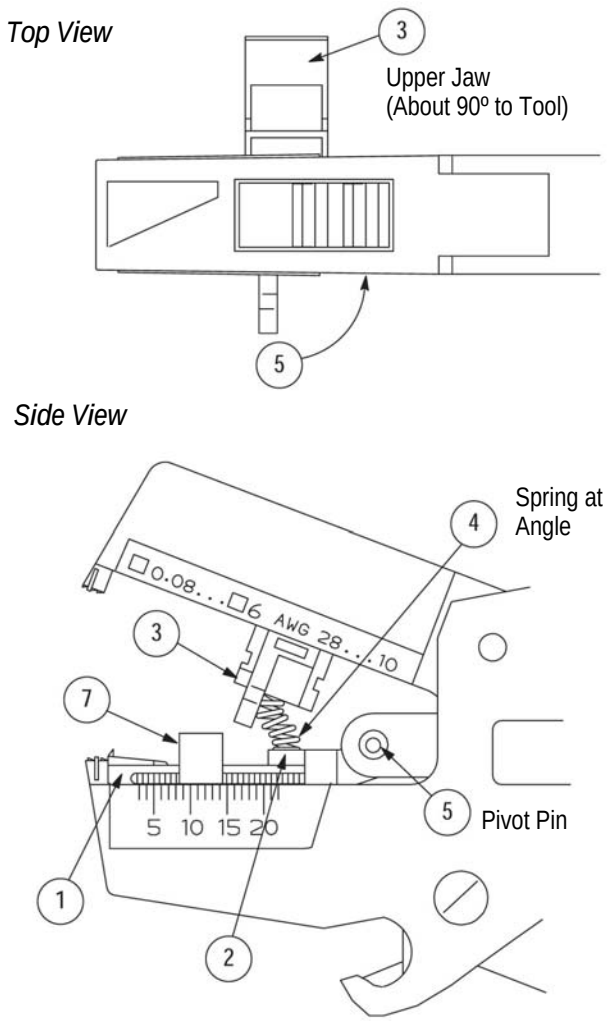

Figure 6

AMEYA360
Components Supply Platform

Authorized Distribution Brand :

Website :

Welcome to visit www.ameya360.com

Contact Us :

- ## Address :

401 Building No.5, JiuGe Business Center, Lane 2301, Yishan Rd
Minhang District, Shanghai , China

- ## Sales :

Direct +86 (21) 6401-6692

Email amall@ameya360.com

QQ 800077892

Skype ameyasales1 ameyasales2

- ## Customer Service :

Email service@ameya360.com

- ## Partnership :

Tel +86 (21) 64016692-8333

Email mkt@ameya360.com