THIS DOCUMENT IS THE PROPERTY OF KEYSTONE ELECTRONICS CORP. AND SHALL NOT BE REPRODUCED, DISTRIBUTED OR USED AS A BASIS FOR MANUFACTURE WITHOUT PRIOR WRITTEN PERMISSION FROM KEYSTONE ELECTRONICS CORP.

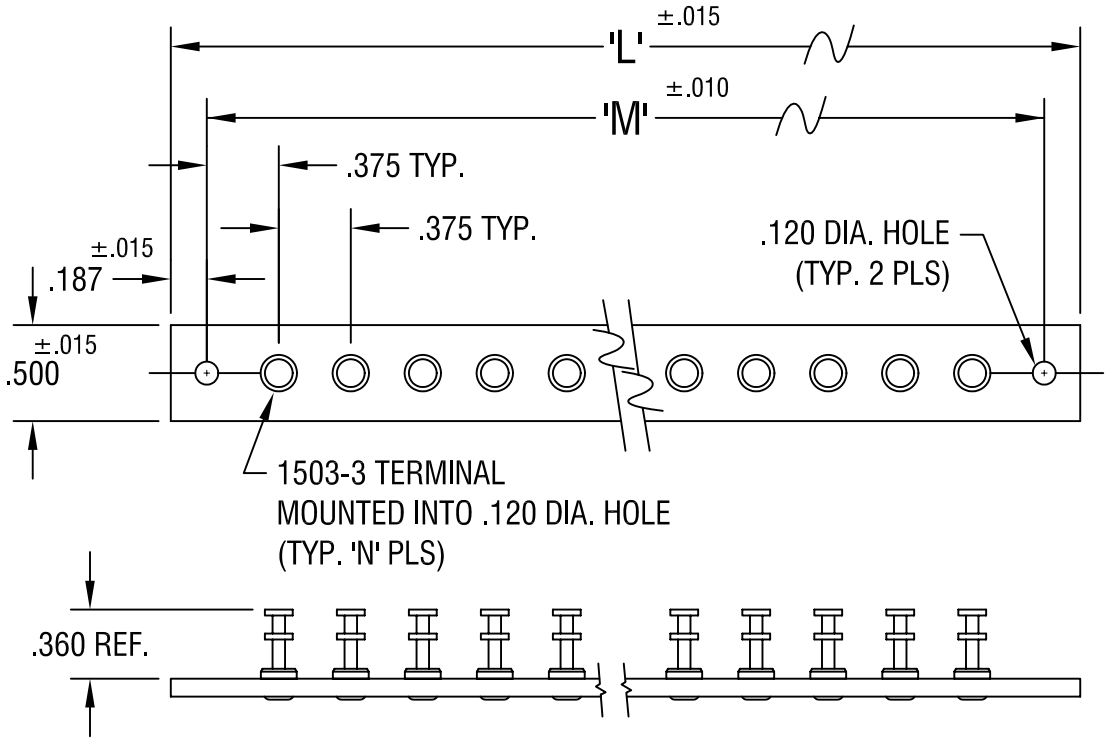

PART NO.	'L' DIM.	'M' DIM.	'N' TERM.
15301	2.625	2.250	5
15302	5.250	4.875	12
15303	7.875	7.500	19
15304	10.500	10.125	26
15305	13.125	12.750	33

KEYSTONE ELECTRONICS CORP.
ASTORIA, N.Y. 11105-2017

PART NAME: TERMINAL BOARD

MATERIAL: .093 TH'K G-10 GLASS EPOXY

FINISH: AS NOTED

DRN BY: BOONE | DATE: 4.4.02

APP'D: LN | SCALE: 1X

TOLERANCES INCH [MM]
DECIMAL ± .005 [±]
ANGULAR ± 1°
UNLESS OTHERWISE SPECIFIED

CODE: C/M

DWG NO. 15301-15305

DATE	DESCRIPTION	REV.
11.16.04	CHANGE AS PER ECN 04–143	A

AMEYA360
Components Supply Platform

Authorized Distribution Brand :

Website :

Welcome to visit www.ameya360.com

Contact Us :

- ### Address :

  401 Building No.5, JiuGe Business Center, Lane 2301, Yishan Rd
  Minhang District, Shanghai , China

- ### Sales :

  Direct +86 (21) 6401-6692

  Email amall@ameya360.com

  QQ 800077892

  Skype ameyasales1 ameyasales2

- ### Customer Service :

  Email service@ameya360.com

- ### Partnership :

  Tel +86 (21) 64016692-8333

  Email mkt@ameya360.com