Rating	10A 125V , 6A 250V AC	Mount Hole	Circuit Structure
Contact R	50m ohm Max.	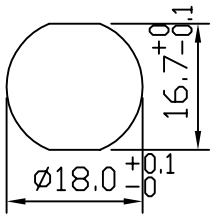	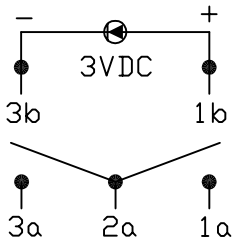
Insulation R	DC 500V 100M ohm Min.		
Dielectric Strength	AC 1500V 1 minute		
Circuit	5P SPDT ON-OFF-ON		

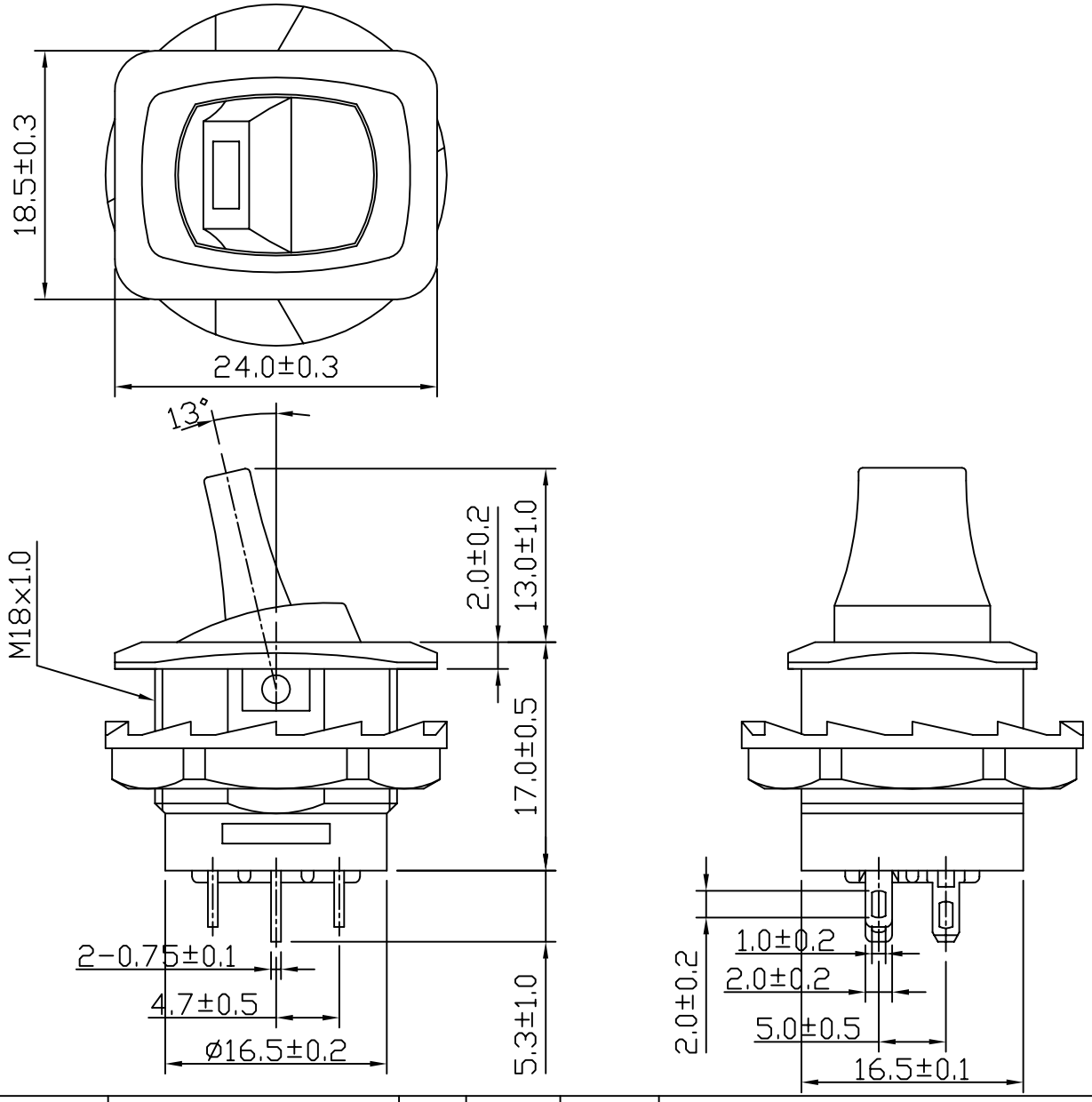

Customer No.			No.	Date	Name	Descriptions
SCI No.						
Model No.	R13-405DL					
Drawing	Check	Approval				
王佰山	姜義振					
12/26/'96	12/26/'96					

AMEYA360
Components Supply Platform

Authorized Distribution Brand :

Website :

Welcome to visit www.ameya360.com

Contact Us :

- ### Address :

  401 Building No.5, JiuGe Business Center, Lane 2301, Yishan Rd
  Minhang District, Shanghai , China

- ### Sales :

  Direct +86 (21) 6401-6692

  Email amall@ameya360.com

  QQ 800077892

  Skype ameyasales1 ameyasales2

- ### Customer Service :

  Email service@ameya360.com

- ### Partnership :

  Tel +86 (21) 64016692-8333

  Email mkt@ameya360.com