CERAMICS SMD ULTRA MINIATURE QUARTZ CRYSTAL

ABM11

2.0 x 1.6 x 0.59mm

Pb | RoHS/RoHS II Compliant

Moisture Sensitivity Level (MSL) – This product is Hermetically Sealed and not Moisture Sensitive - MSL = N/A: Not Applicable

FEATURES:

- 2.0 x 1.6 x 0.59mm ultra miniature package.
- Suitable for RoHS compliant reflow.
- Seam sealed ceramic package with metal lid assures high precision and reliability.

APPLICATIONS:

- Cellular telephones, Pagers.
- Com munication and Test equipment.
- High Density applications
- PCMCIA and wireless applications.

STANDARD SPECIFICATIONS:

Parameters	Minimum	Typical	Maximum	Units	Notes
Frequency Range	16.000		50.000	MHz	
Operation Mode		Fundamental			
Operating Temperature	-10		+60	ºC	See options
Storage Temperature	-40		+85	ºC	
Frequency Tolerance @+25℃	-30		+30	ppm	See options
Frequency Stability over the Operating Temperature (ref. to +25℃)	-50		+50	ppm	See options
Equivalent series resistance (R1)			150	Ω	16.000~17.999MHz
			120		18.000~20.999MHz
			100		21.000~29.999 MHz
			80		30.000~37.999 MHz
			60		38.000~50.000 MHz
Shunt capacitance (C0)			7.0	pF	
Load capacitance (CL)		10		pF	Standard (See options if other than STD)
Drive Level		10	100	µW	
Aging	-5		+5	ppm	@25℃±3℃ First year
Insulation Resistance	500			MΩ	@ 100Vdc ± 15V

OPTIONS AND PART IDENTIFICATION:

(Left blank if standard)

ABM11 - [ ] MHz - [ ] - [ ] - [ ][ ][ ] - [ ]

Frequency in MHz
Please specify the frequency in MHz.
e.g. 16.000MHz

Load Capacitance (pF)
Please specify CL (min 6pF) in pF or S for series

Custom ESR if other than standard
R□
□: Specify a value in Ω (e.g.: R40)

Operating Temp.
- I: 0°C ~ +50°C
- E: 0°C ~ +70°C
- B: -20°C ~ +70°C
- C: -30°C ~ +70°C
- N: -30°C ~ +85°C
- D: -40°C ~ +85°C

Freq. Tolerance
- 7: ± 15 ppm
- 2: ± 20 ppm
- 5: ± 50 ppm

Freq. Stability
- U: ± 10 ppm (*)
- G: ± 15 ppm (**)
- X: ± 20 ppm
- W: ± 25 ppm
- Y: ± 30 ppm
- Q: ± 100 ppm

* Temp option I and -10 to +60˚C only

** Temp option I, E, B, C, N, and -10 to +60˚C only

Packaging
- Blank: Bulk
- T: 1kpcs / reel
- T3: 3kpcs / reel

30332 Esperanza, Rancho Santa Margarita, California 92688
tel 949-546-8000 | fax 949-546-8001 | www.abracon.com

CERAMICS SMD ULTRA MINIATURE QUARTZ CRYSTAL

ABM11

RoHS/RoHS II Compliant

2.0 x 1.6 x 0.59mm

OUTLINE DRAWING:

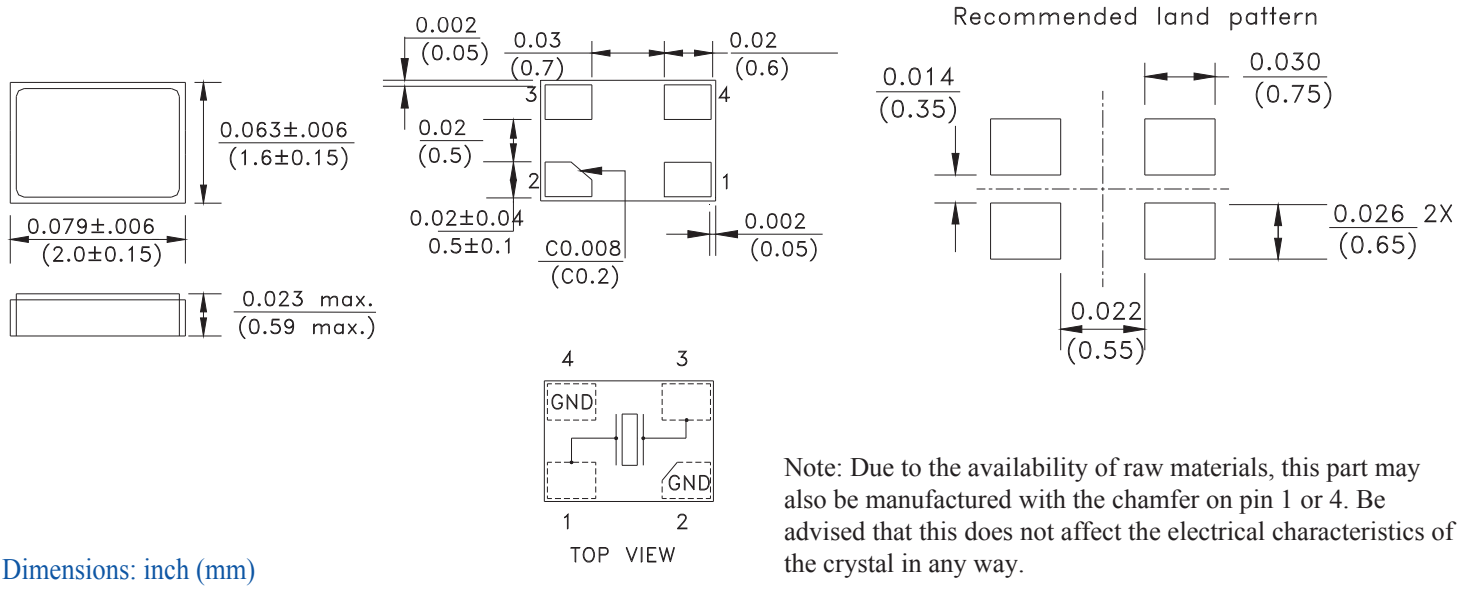

Dimensions: inch (mm)

Note: Due to the availability of raw materials, this part may also be manufactured with the chamfer on pin 1 or 4. Be advised that this does not affect the electrical characteristics of the crystal in any way.

TAPE & REEL:

Option "-T": Tape and reel (1,000pcs/reel)
Option "-T3": Tape and reel (3,000pcs/reel)

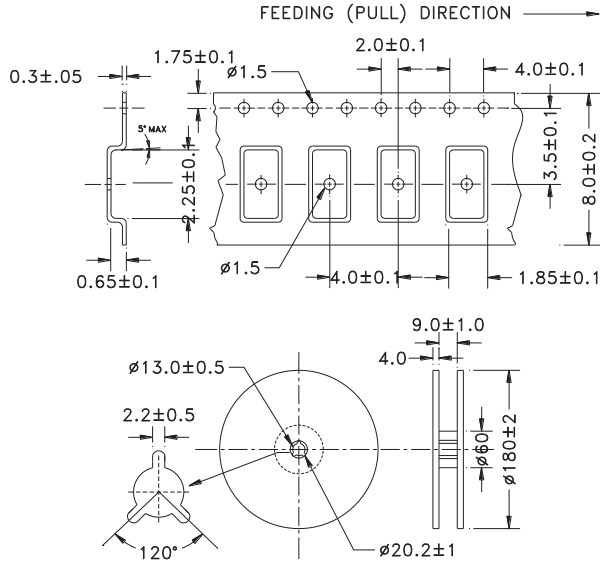

Dimensions: mm

REFLOW PROFILE:

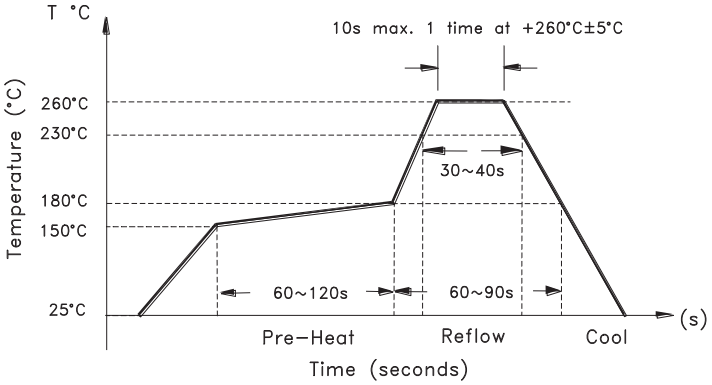

Need a test socket for the ABM11 Series? To view compatible **PRECISION TEST & BURN-IN SOCKETS** for these parts, **click here. P/N AXS-2016-04-04C**

ATTENTION: Abracon Corporation's products are COTS – Commercial-Off-The-Shelf products; suitable for Commercial, Industrial and, where designated, Automotive Applications. Abracon's products are not specifically designed for Military, Aviation, Aerospace, Life-dependant Medical applications or any application requiring high reliability where component failure could result in loss of life and/or property. For applications requiring high reliability and/or presenting an extreme operating environment, written consent and authorization from Abracon Corporation is required. Please contact Abracon Corporation for more information.

30332 Esperanza, Rancho Santa Margarita, California 92688
tel 949-546-8000 | fax 949-546-8001 | www.abracon.com

AMEYA360
Components Supply Platform

Authorized Distribution Brand :

Website :

Welcome to visit www.ameya360.com

Contact Us :

- ## Address :

401 Building No.5, JiuGe Business Center, Lane 2301, Yishan Rd
Minhang District, Shanghai , China

- ## Sales :

Direct +86 (21) 6401-6692

Email amall@ameya360.com

QQ 800077892

Skype ameyasales1 ameyasales2

- ## Customer Service :

Email service@ameya360.com

- ## Partnership :

Tel +86 (21) 64016692-8333

Email mkt@ameya360.com