PLCC2 SMD TYPE LED

VAOL-S2WR4

Features

- Fit automatic placement equipment.
- Fit Compatible with vapor-phase reflow, Infrared reflow and wave solder processes.
- White package.
- Pb-free.
- RoHS compliant.

Descriptions

- For higher packing density .
- For minature applications .
- Yellow Diffusion lens .
- Chip material : InGaN .
- Emitting color : White .

Package Outline Dimensions

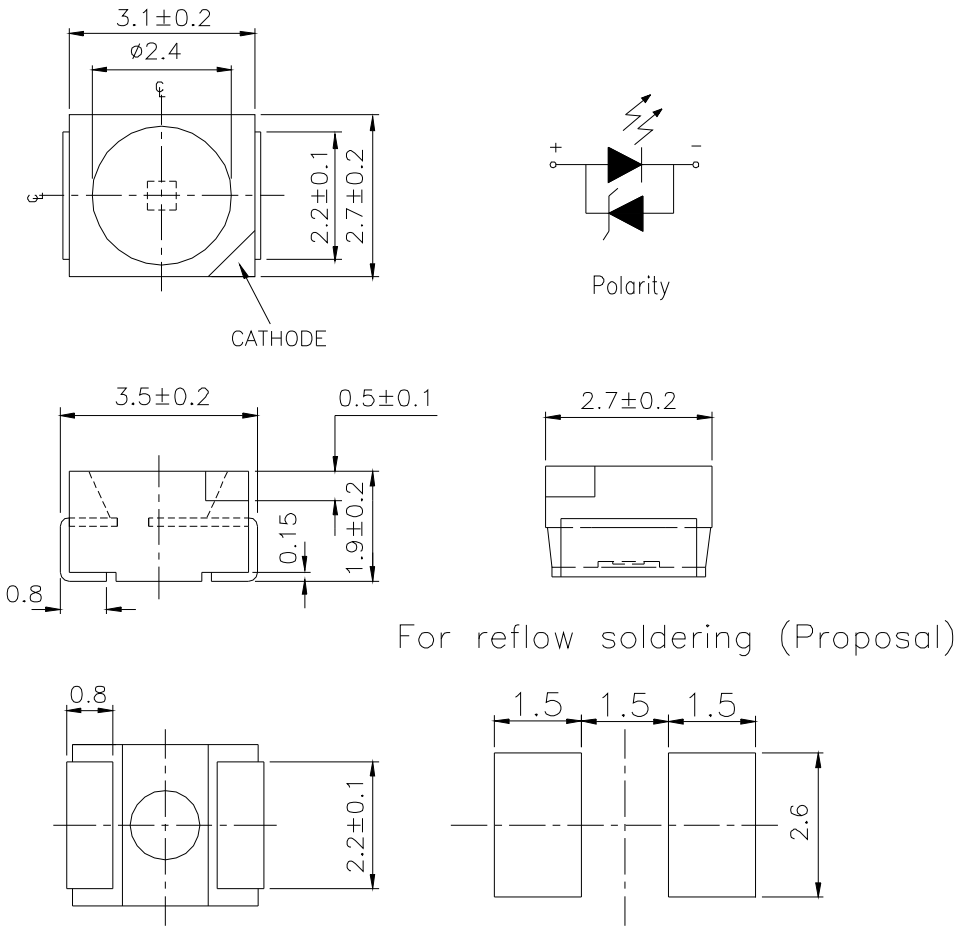

Note: The tolerances unless mentioned is ±0.1mm ,Unit = mm

www.vcclite.com
190 bosstick blvd, ste 101
san marcos, ca 92069
phone 760.560.1300
fax 760.560.1301

RoHS
ISO 9001 Registered

Absolute Maximum Ratings (Ta=25℃)

Parameter	Symbol	Rating	Unit
Reverse Voltage	V_R	5	V
Forward Current	I_F	25	mA
Operating Temperature	Topr	-40 ~ +85	℃
Storage Temperature	Tstg	-40 ~ +90	℃
Electrostatic Discharge(HBM)	ESD	2000	V
Power Dissipation	Pd	110	mW
Peak Forward Current (Duty 1/10 @1KHz)	I_{FP}	100	mA
Soldering Temperature	Tsol	Reflow Soldering : 260 ℃ for 10 sec. Hand Soldering : 350 ℃ for 3 sec.	

Electro-Optical Characteristics (Ta=25℃)

Parameter	Symbol	Min.	Typ.	Max.	Units	Condition
Luminous Intensity	I_V	715	------	1800	mcd	I_F=20mA
Forward Voltage	V_F	2.70	-----	3.50	V	I_F=20mA
Viewing Angle	$2\theta 1/2$	--	120	--	deg	I_F=20mA

Notes:

1.Tolerance of Luminous Intensity ±10%

2.Tolerance of Forward Voltage ±0.1V

Bin Range Of Luminous Intensity

Bin Code	Min.	Max.	Unit	Condition
V1	715	900	mcd	I_F=20mA
V2	900	1120		
W1	1120	1420		
W2	1420	1800		

Bin Range Of Forward Voltage

Group	Bin Code	Min.	Max.	Unit	Condition
F	10	2.70	2.90	V	I_F=20mA
	11	2.90	3.10		
	12	3.10	3.30		
	13	3.30	3.50		

Specific binning requirements- please contact our home office

Notes:

1.Tolerance of Luminous Intensity ±10%

2.Tolerance of Forward Voltage ±0.1V

Group	Bin Code	CIE_x	CIE_y	Bin Code	CIE_x	CIE_y
F	B3	0.287	0.295	B4	0.307	0.315
		0.283	0.305		0.304	0.33
		0.304	0.330		0.33	0.36
		0.307	0.315		0.33	0.339
	B5	0.296	0.276	B6	0.311	0.294
		0.287	0.295		0.307	0.315
		0.307	0.315		0.330	0.339
		0.311	0.294		0.330	0.318

***The C.I.E. 1931 chromaticity diagram (Tolerance ±0.01).**

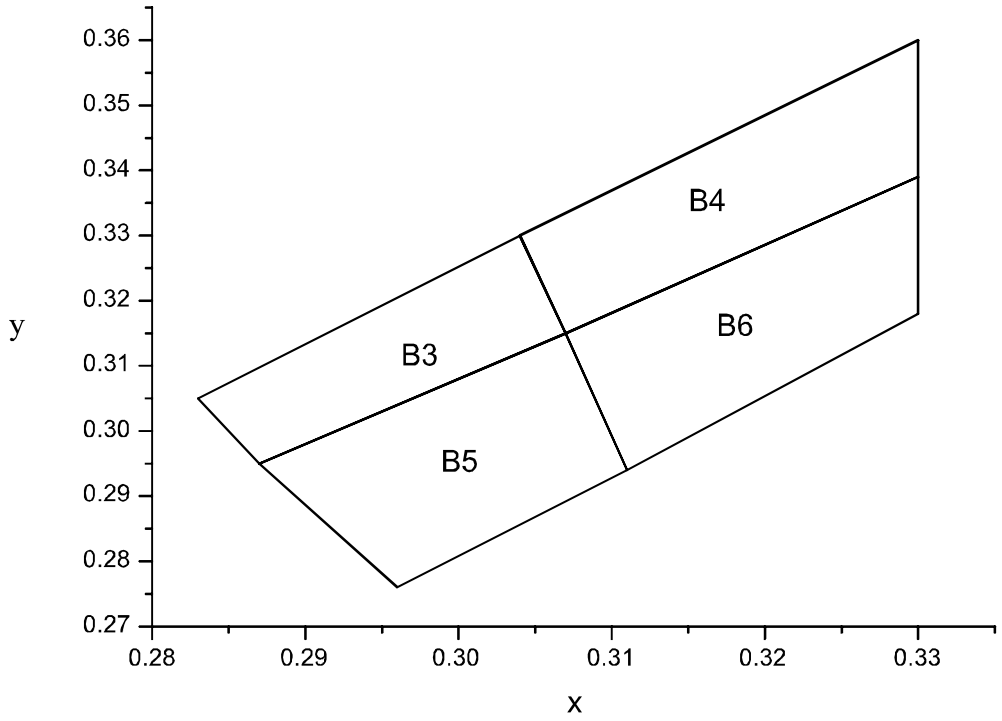

Typical Electro-Optical Characteristics Curves

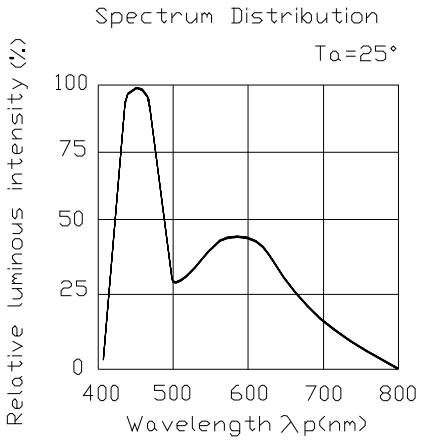

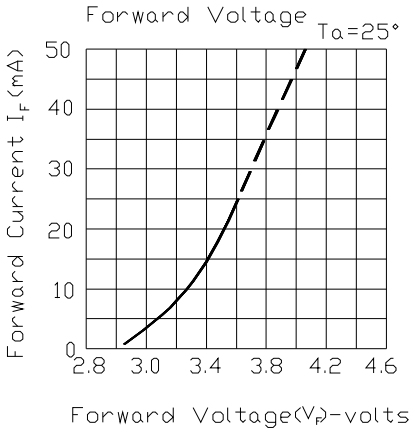

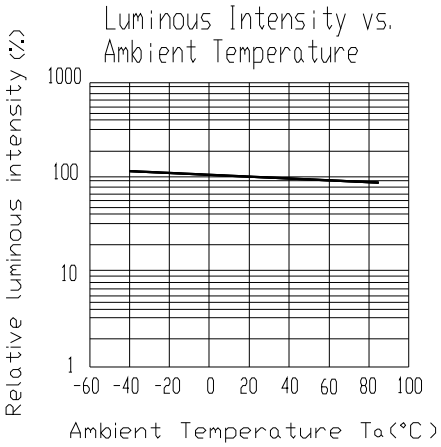

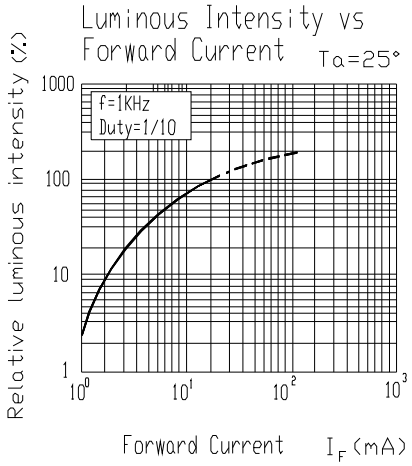

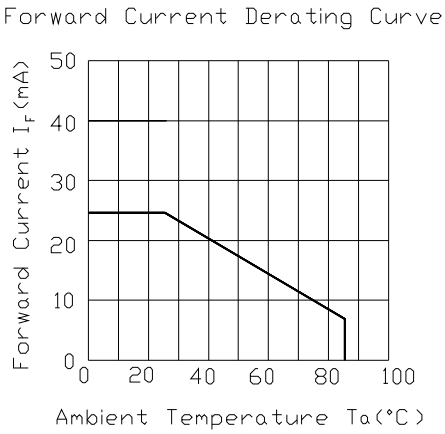

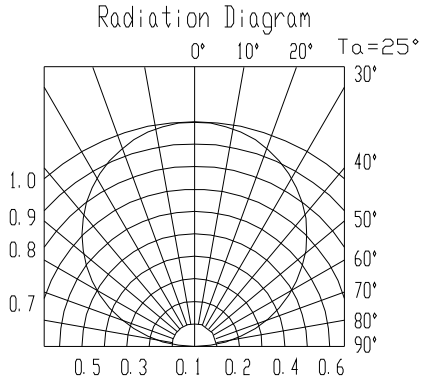

Reel Dimensions

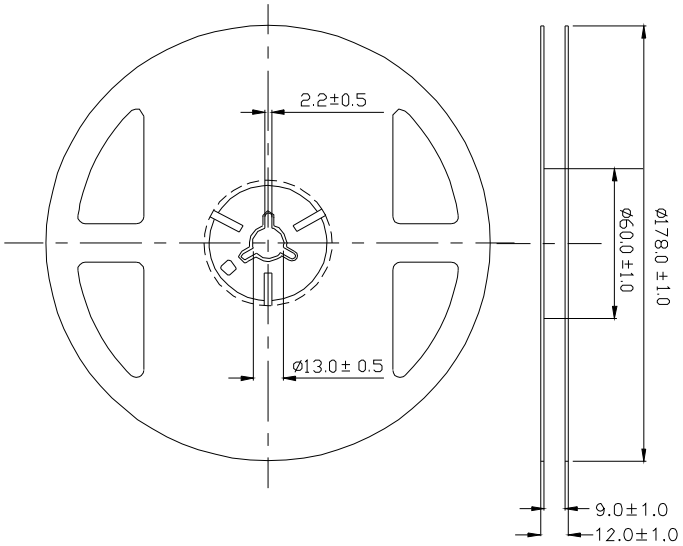

Note: The tolerances unless mentioned is ±0.1mm ,Unit = mm

Carrier Tape Dimensions: Loaded quantity 2000 PCS per reel.

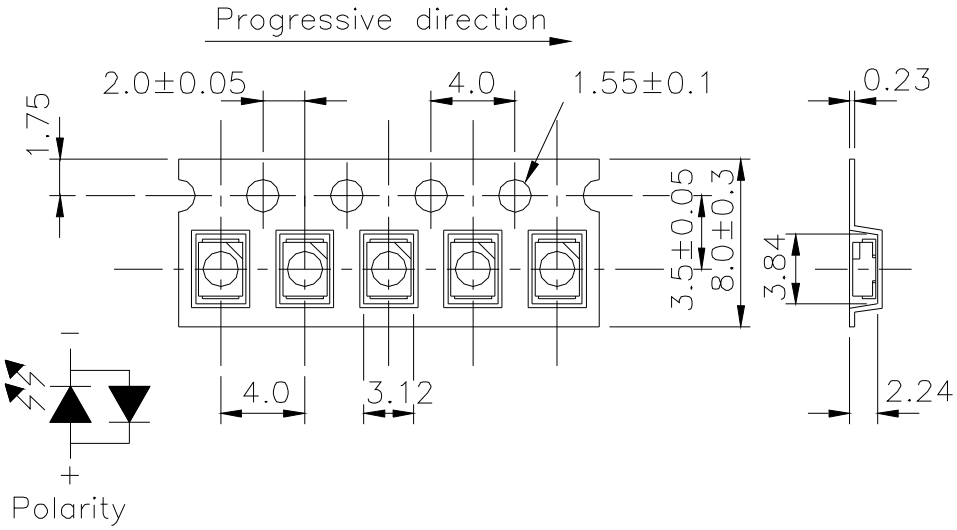

Note: The tolerances unless mentioned is ±0.1mm ,Unit = mm

Moisture Resistant Packaging

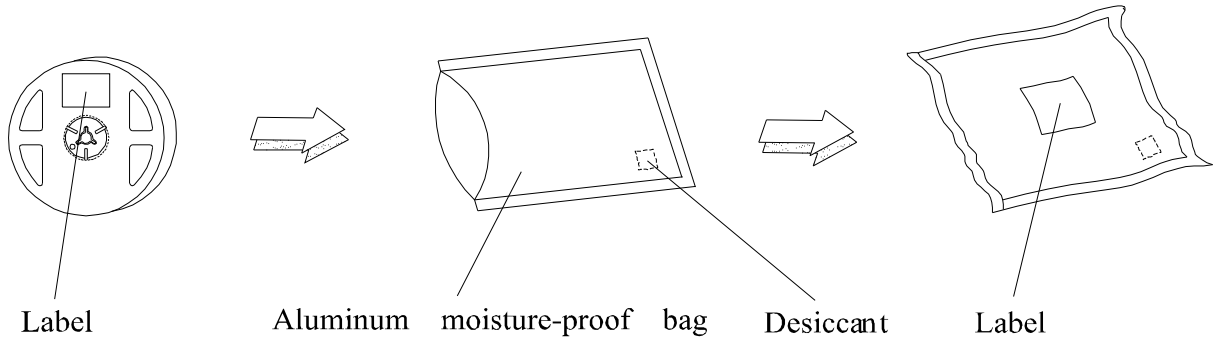

67-11/W1C-FV1W2F/2T

Soldering Condition

1.Pb-free solder temperature profile

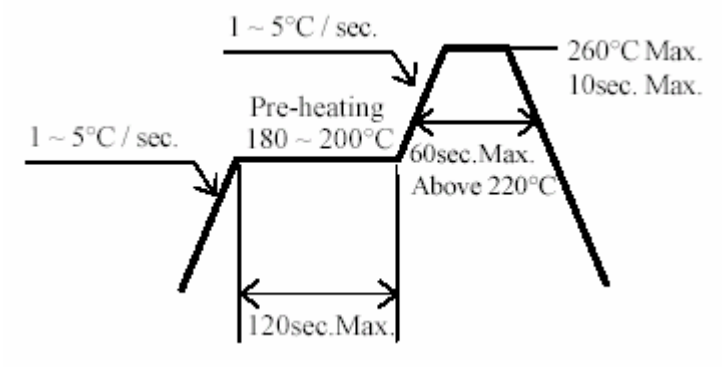

2.Reflow soldering should not be done more than two times.

3 When soldering, do not put stress on the LEDs during heating.

4 After soldering, do not warp the circuit board.

Soldering Iron

Each terminal is to go to the tip of soldering iron temperature less than 350℃ for 3 seconds within once in less than the soldering iron capacity 25W. Leave two seconds and more intervals, and do soldering of each terminal. Be careful because the damage of the product is often started at the time of the hand solder.

AMEYA360
Components Supply Platform

Authorized Distribution Brand :

Website :

Welcome to visit www.ameya360.com

Contact Us :

Address :

401 Building No.5, JiuGe Business Center, Lane 2301, Yishan Rd
Minhang District, Shanghai , China

Sales :

Direct +86 (21) 6401-6692

Email amall@ameya360.com

QQ 800077892

Skype ameyasales1 ameyasales2

Customer Service :

Email service@ameya360.com

Partnership :

Tel +86 (21) 64016692-8333

Email mkt@ameya360.com