Mixed Signal Microcontroller

Check for Samples: MSP430BT5190

FEATURES

- **Designed for Use With CC2560 TI *Bluetooth* ® Based Solutions** (1)
- **Commercially Licensed Mindtree™ Ethermind *Bluetooth* Stack for MSP430**
  - ***Bluetooth* v2.1 + Enhanced Data Rate (EDR) Compliant**
  - **Serial Port Profile (SPP)**
  - **Sample Applications**
- **Low Supply Voltage Range: 3.6 V Down to 1.8 V**
- **Ultralow-Power Consumption**
  - **Active Mode (AM): All System Clocks Active 230 µA/MHz at 8 MHz, 3 V, Flash Program Execution (Typical) 110 µA/MHz at 8 MHz, 3 V, RAM Program Execution (Typical)**
  - **Standby Mode (LPM3): Real-Time Clock With Crystal, Watchdog, and Supply Supervisor Operational, Full RAM Retention, Fast Wake-Up: 1.7 µA at 2.2 V, 2.1 µA at 3 V (Typical) Low-Power Oscillator (VLO), General-Purpose Counter, Watchdog, and Supply Supervisor Operational, Full RAM Retention, Fast Wake-Up: 1.2 µA at 3 V (Typical)**
  - **Off Mode (LPM4): Full RAM Retention, Supply Supervisor Operational, Fast Wake-Up: 1.2 µA at 3 V (Typical)**
  - **Shutdown Mode (LPM4.5): 0.1 µA at 3 V (Typical)**
- **Wake Up From Standby Mode in Less Than 5 µs**
- **16-Bit RISC Architecture**
- **Flexible Power Management System**
  - **Fully Integrated LDO With Programmable Regulated Core Supply Voltage**
  - **Supply Voltage Supervision, Monitoring, and Brownout**
- **Unified Clock System**
  - **FLL Control Loop for Frequency Stabilization**
  - **Low-Power Low-Frequency Internal Clock Source (VLO)**
  - **Low-Frequency Trimmed Internal Reference Source (REFO)**
  - **32-kHz Crystals**
  - **High-Frequency Crystals up to 32 MHz**
- **16-Bit Timer TA0, Timer_A With Five Capture/Compare Registers**
- **16-Bit Timer TA1, Timer_A With Three Capture/Compare Registers**
- **16-Bit Timer TB0, Timer_B With Seven Capture/Compare Shadow Registers**
- **Up to Four Universal Serial Communication Interfaces**
  - **USCI_A0, USCI_A1, USCI_A2, and USCI_A3 Each Support:**
    - **Enhanced UART Supports Auto-Baudrate Detection**
    - **IrDA Encoder and Decoder**
    - **Synchronous SPI**
  - **USCI_B0, USCI_B1, USCI_B2, and USCI_B3 Each Support:**
    - **I^2C**
    - **Synchronous SPI**
- **12-Bit Analog-to-Digital Converter (ADC)**
  - **Internal Reference**
  - **14 External Channels, 2 Internal Channels**
- **Hardware Multiplier Supports 32-Bit Operations**
- **Serial Onboard Programming, No External Programming Voltage Needed**

(1) The *Bluetooth* word mark and logos are owned by *Bluetooth* SIG, Inc., and any use of such marks by Texas Instruments is under license.

Please be aware that an important notice concerning availability, standard warranty, and use in critical applications of Texas Instruments semiconductor products and disclaimers thereto appears at the end of this data sheet.

MSP430, Code Composer Studio are trademarks of Texas Instruments.
Mindtree is a trademark of Mindtree Ltd.
All other trademarks are the property of their respective owners.

PRODUCTION DATA information is current as of publication date. Products conform to specifications per the terms of the Texas Instruments standard warranty. Production processing does not necessarily include testing of all parameters.

Copyright © 2010–2013, Texas Instruments Incorporated

- **Three-Channel Internal DMA**
- **Basic Timer With Real-Time Clock Feature**
- **Family Members are Summarized in Table 1**
- **For Complete Module Descriptions, See the *MSP430x5xx and MSP430x6xx Family User's Guide* (SLAU208)**

APPLICATIONS

- **Remote Controls**
- **Thermostats**
- **Smart Metering**
- **Blood Glucose Meters**
- **Pulseoximeters**

DESCRIPTION

The Texas Instruments MSP430™ family of ultralow-power microcontrollers consists of several devices featuring different sets of peripherals targeted for various applications. The architecture, combined with extensive low-power modes, is optimized to achieve extended battery life in portable measurement applications. The device features a powerful 16-bit RISC CPU, 16-bit registers, and constant generators that contribute to maximum code efficiency. The digitally controlled oscillator (DCO) allows the device to wake up from low-power modes to active mode in less than 5 µs.

MSP430BT5190 is a microcontroller configuration with three 16-bit timers, a high-performance 12-bit analog-to-digital converter (ADC), four universal serial communication interfaces (USCIs), a hardware multiplier, DMA, a real-time clock module with alarm capabilities, and 87 I/O pins.

The MSP430BT5190 microcontroller is designed for commercial use with TI's CC2560 based *Bluetooth* solutions in conjunction with Mindtree's Ethermind *Bluetooth* stack and Serial Port Profile (SPP). This MSP430BT5190+CC2560 *Bluetooth* platform is ideal for applications that need a wireless serial link for cable replacement, such as remote controls, thermostats, smart metering, blood glucose meters, pulseoximeters, and many others.

Table 1 summarizes the available family members.

Table 1. Family Members(1)(2)

Device	Flash (KB)	SRAM (KB)	Timer_A(3)	Timer_B(4)	USCI		ADC12_A (Ch)	I/O	Package Type
					Channel A: UART, IrDA, SPI	Channel B: SPI, I^2C			
MSP430BT5190	256	16	5, 3	7	4	4	14 ext, 2 int	87	100 PZ, 113 ZQW

(1) For the most current package and ordering information, see the Package Option Addendum at the end of this document, or see the TI web site at www.ti.com.
(2) Package drawings, thermal data, and symbolization are available at www.ti.com/packaging.
(3) Each number in the sequence represents an instantiation of Timer_A with its associated number of capture compare registers and PWM output generators available. For example, a number sequence of 3, 5 would represent two instantiations of Timer_A, the first instantiation having 3 and the second instantiation having 5 capture compare registers and PWM output generators, respectively.
(4) Each number in the sequence represents an instantiation of Timer_B with its associated number of capture compare registers and PWM output generators available. For example, a number sequence of 3, 5 would represent two instantiations of Timer_B, the first instantiation having 3 and the second instantiation having 5 capture compare registers and PWM output generators, respectively.

Copyright © 2010–2013, Texas Instruments Incorporated

Functional Block Diagram

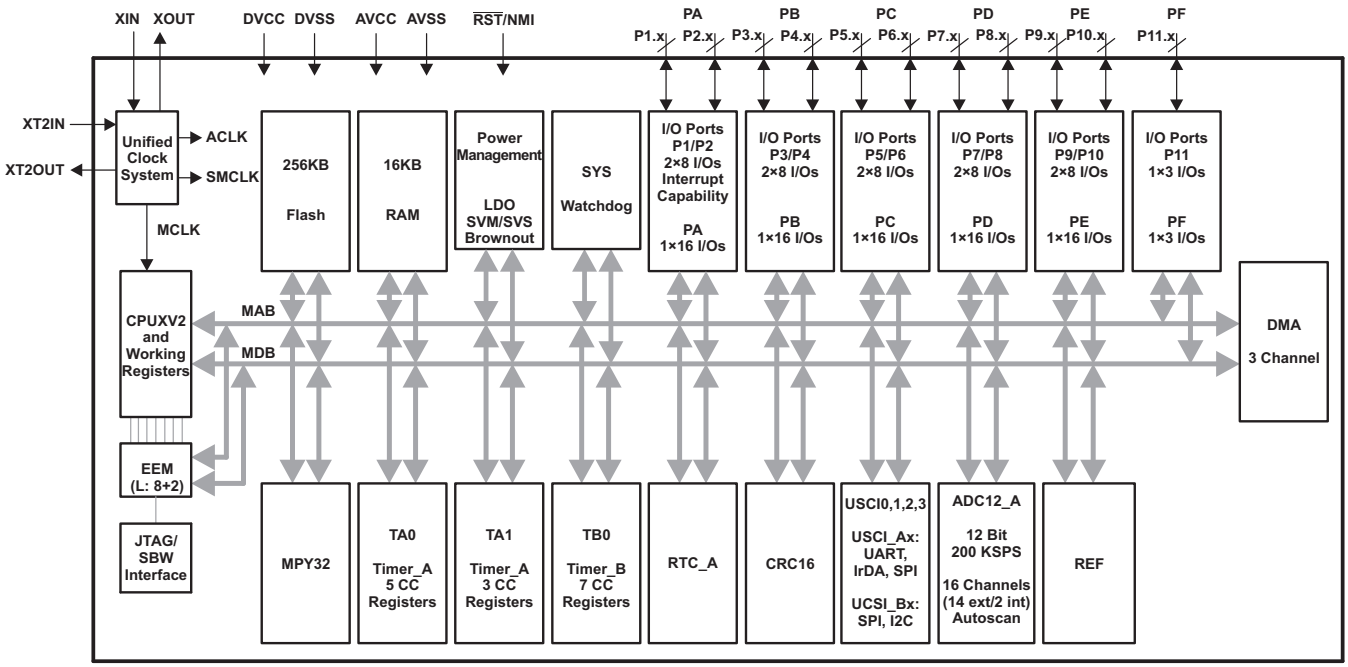

Pin Designation, MSP430BT5190IPZ

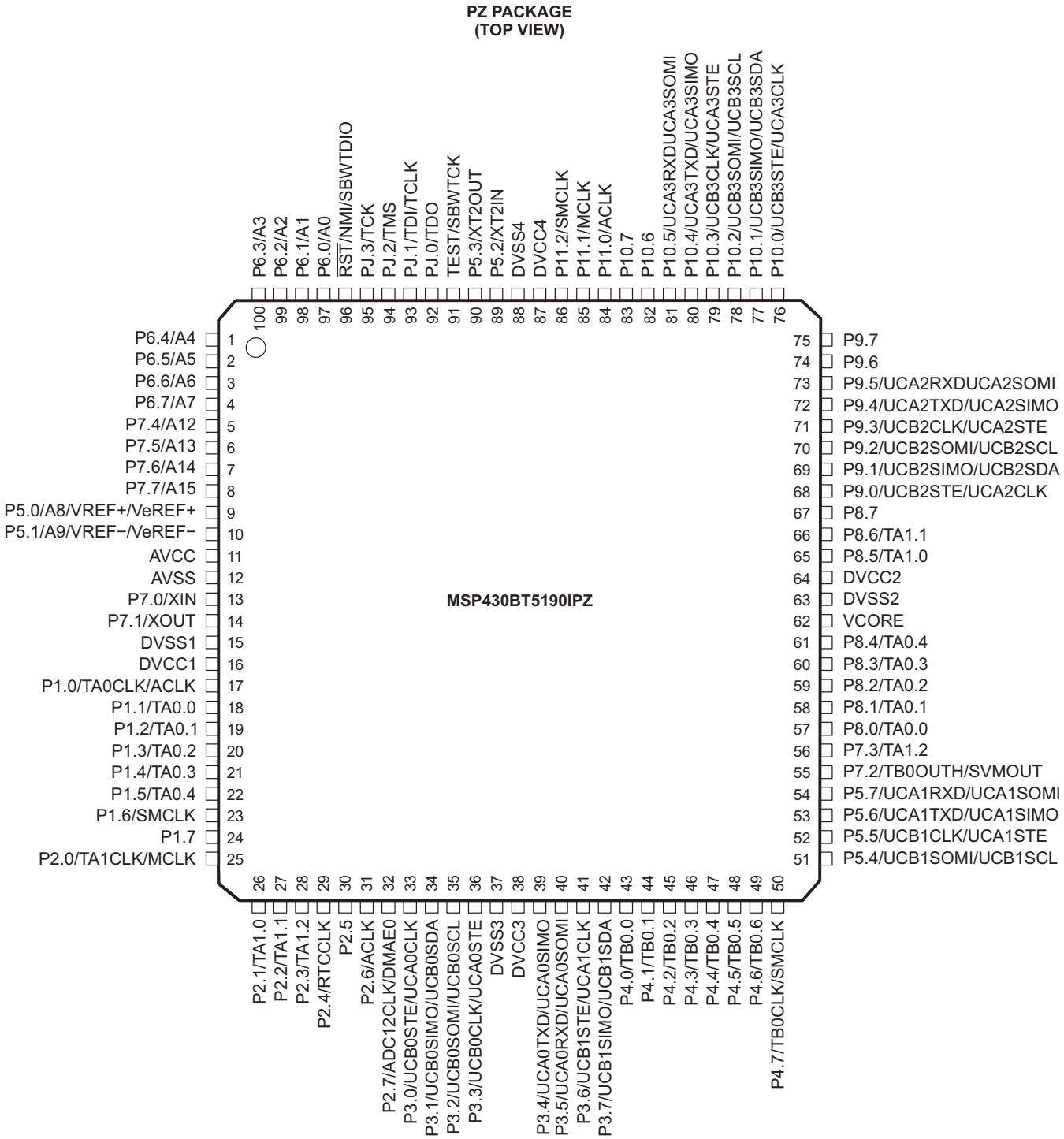

Copyright © 2010–2013, Texas Instruments Incorporated

Pin Designation, MSP430BT5190IZQW

ZQW PACKAGE
(TOP VIEW)

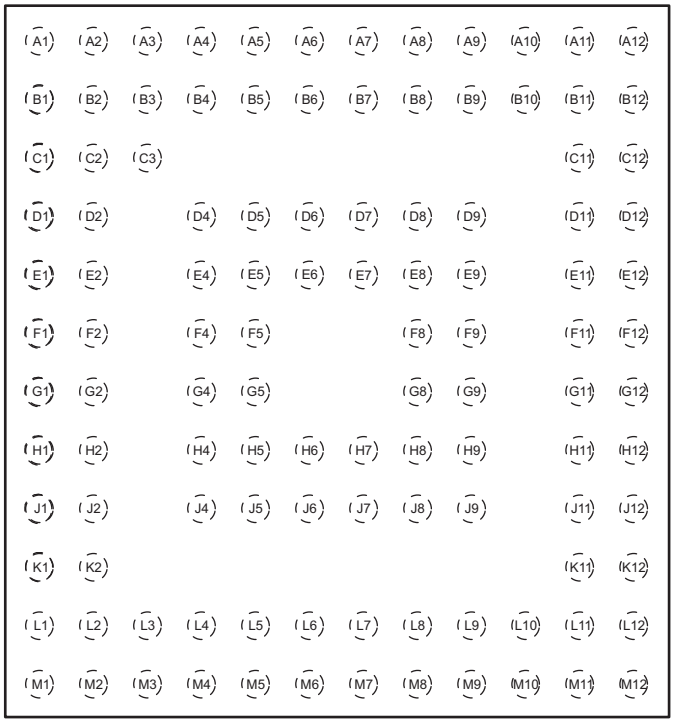

Table 2. Terminal Functions

TERMINAL			I/O (1)	DESCRIPTION
NAME	NO.			
	PZ	ZQW		
P6.4/A4	1	A1	I/O	General-purpose digital I/O Analog input A4 – ADC
P6.5/A5	2	E4	I/O	General-purpose digital I/O Analog input A5 – ADC
P6.6/A6	3	B1	I/O	General-purpose digital I/O Analog input A6 – ADC
P6.7/A7	4	C2	I/O	General-purpose digital I/O Analog input A7 – ADC
P7.4/A12	5	F4	I/O	General-purpose digital I/O Analog input A12 –ADC
P7.5/A13	6	C1	I/O	General-purpose digital I/O Analog input A13 – ADC
P7.6/A14	7	D2	I/O	General-purpose digital I/O Analog input A14 – ADC
P7.7/A15	8	G4	I/O	General-purpose digital I/O Analog input A15 – ADC
P5.0/A8/VREF+/VeREF+	9	D1	I/O	General-purpose digital I/O Analog input A8 – ADC Output of reference voltage to the ADC Input for an external reference voltage to the ADC
P5.1/A9/VREF-/VeREF-	10	E1	I/O	General-purpose digital I/O Analog input A9 – ADC Negative terminal for the ADC's reference voltage for both sources, the internal reference voltage, or an external applied reference voltage
AVCC	11	E2		Analog power supply
AVSS	12	F2		Analog ground supply
P7.0/XIN	13	F1	I/O	General-purpose digital I/O Input terminal for crystal oscillator XT1
P7.1/XOUT	14	G1	I/O	General-purpose digital I/O Output terminal of crystal oscillator XT1
DVSS1	15	G2		Digital ground supply
DVCC1	16	H2		Digital power supply
P1.0/TA0CLK/ACLK	17	H1	I/O	General-purpose digital I/O with port interrupt TA0 clock signal TACLK input ACLK output (divided by 1, 2, 4, 8, 16, or 32)
P1.1/TA0.0	18	H4	I/O	General-purpose digital I/O with port interrupt TA0 CCR0 capture: CCI0A input, compare: Out0 output BSL transmit output
P1.2/TA0.1	19	J4	I/O	General-purpose digital I/O with port interrupt TA0 CCR1 capture: CCI1A input, compare: Out1 output BSL receive input
P1.3/TA0.2	20	J1	I/O	General-purpose digital I/O with port interrupt TA0 CCR2 capture: CCI2A input, compare: Out2 output
P1.4/TA0.3	21	J2	I/O	General-purpose digital I/O with port interrupt TA0 CCR3 capture: CCI3A input compare: Out3 output
P1.5/TA0.4	22	K1	I/O	General-purpose digital I/O with port interrupt TA0 CCR4 capture: CCI4A input, compare: Out4 output
P1.6/SMCLK	23	K2	I/O	General-purpose digital I/O with port interrupt SMCLK output
P1.7	24	L1	I/O	General-purpose digital I/O with port interrupt
P2.0/TA1CLK/MCLK	25	M1	I/O	General-purpose digital I/O with port interrupt TA1 clock signal TA1CLK input MCLK output

(1) I = input, O = output, N/A = not available on this package offering

Copyright © 2010–2013, Texas Instruments Incorporated

Table 2. Terminal Functions (continued)

TERMINAL			I/O (1)	DESCRIPTION
NAME	NO.			
	PZ	ZQW		
P2.1/TA1.0	26	L2	I/O	General-purpose digital I/O with port interrupt TA1 CCR0 capture: CCI0A input, compare: Out0 output
P2.2/TA1.1	27	M2	I/O	General-purpose digital I/O with port interrupt TA1 CCR1 capture: CCI1A input, compare: Out1 output
P2.3/TA1.2	28	L3	I/O	General-purpose digital I/O with port interrupt TA1 CCR2 capture: CCI2A input, compare: Out2 output
P2.4/RTCCLK	29	M3	I/O	General-purpose digital I/O with port interrupt RTCCLK output
P2.5	30	L4	I/O	General-purpose digital I/O with port interrupt
P2.6/ACLK	31	M4	I/O	General-purpose digital I/O with port interrupt ACLK output (divided by 1, 2, 4, 8, 16, or 32)
P2.7/ADC12CLK/DMAE0	32	J5	I/O	General-purpose digital I/O with port interrupt Conversion clock output ADC DMA external trigger input
P3.0/UCB0STE/UCA0CLK	33	L5	I/O	General-purpose digital I/O Slave transmit enable – USCI_B0 SPI mode Clock signal input – USCI_A0 SPI slave mode Clock signal output – USCI_A0 SPI master mode
P3.1/UCB0SIMO/UCB0SDA	34	M5	I/O	General-purpose digital I/O Slave in, master out – USCI_B0 SPI mode I2C data – USCI_B0 I2C mode
P3.2/UCB0SOMI/UCB0SCL	35	J6	I/O	General-purpose digital I/O Slave out, master in – USCI_B0 SPI mode I2C clock – USCI_B0 I2C mode
P3.3/UCB0CLK/UCA0STE	36	L6	I/O	General-purpose digital I/O Clock signal input – USCI_B0 SPI slave mode Clock signal output – USCI_B0 SPI master mode Slave transmit enable – USCI_A0 SPI mode
DVSS3	37	M6		Digital ground supply
DVCC3	38	M7		Digital power supply
P3.4/UCA0TXD/UCA0SIMO	39	L7	I/O	General-purpose digital I/O Transmit data – USCI_A0 UART mode Slave in, master out – USCI_A0 SPI mode
P3.5/UCA0RXD/UCA0SOMI	40	J7	I/O	General-purpose digital I/O Receive data – USCI_A0 UART mode Slave out, master in – USCI_A0 SPI mode
P3.6/UCB1STE/UCA1CLK	41	M8	I/O	General-purpose digital I/O Slave transmit enable – USCI_B1 SPI mode Clock signal input – USCI_A1 SPI slave mode Clock signal output – USCI_A1 SPI master mode
P3.7/UCB1SIMO/UCB1SDA	42	L8	I/O	General-purpose digital I/O Slave in, master out – USCI_B1 SPI mode I2C data – USCI_B1 I2C mode
P4.0/TB0.0	43	J8	I/O	General-purpose digital I/O TB0 capture CCR0: CCI0A/CCI0B input, compare: Out0 output
P4.1/TB0.1	44	M9	I/O	General-purpose digital I/O TB0 capture CCR1: CCI1A/CCI1B input, compare: Out1 output
P4.2/TB0.2	45	L9	I/O	General-purpose digital I/O TB0 capture CCR2: CCI2A/CCI2B input, compare: Out2 output
P4.3/TB0.3	46	L10	I/O	General-purpose digital I/O TB0 capture CCR3: CCI3A/CCI3B input, compare: Out3 output
P4.4/TB0.4	47	M10	I/O	General-purpose digital I/O TB0 capture CCR4: CCI4A/CCI4B input, compare: Out4 output
P4.5/TB0.5	48	L11	I/O	General-purpose digital I/O TB0 capture CCR5: CCI5A/CCI5B input, compare: Out5 output

Copyright © 2010–2013, Texas Instruments Incorporated

Table 2. Terminal Functions (continued)

TERMINAL			I/O[1]	DESCRIPTION
NAME	NO.			
	PZ	ZQW		
P4.6/TB0.6	49	M11	I/O	General-purpose digital I/O TB0 capture CCR6: CCI6A/CCI6B input, compare: Out6 output
P4.7/TB0CLK/SMCLK	50	M12	I/O	General-purpose digital I/O TB0 clock input SMCLK output
P5.4/UCB1SOMI/UCB1SCL	51	L12	I/O	General-purpose digital I/O Slave out, master in – USCI_B1 SPI mode I2C clock – USCI_B1 I2C mode
P5.5/UCB1CLK/UCA1STE	52	J9	I/O	General-purpose digital I/O Clock signal input – USCI_B1 SPI slave mode Clock signal output – USCI_B1 SPI master mode Slave transmit enable – USCI_A1 SPI mode
P5.6/UCA1TXD/UCA1SIMO	53	K11	I/O	General-purpose digital I/O Transmit data – USCI_A1 UART mode Slave in, master out – USCI_A1 SPI mode
P5.7/UCA1RXD/UCA1SOMI	54	K12	I/O	General-purpose digital I/O Receive data – USCI_A1 UART mode Slave out, master in – USCI_A1 SPI mode
P7.2/TB0OUTH/SVMOUT	55	J11	I/O	General-purpose digital I/O Switch all PWM outputs high impedance – Timer TB0 SVM output
P7.3/TA1.2	56	J12	I/O	General-purpose digital I/O TA1 CCR2 capture: CCI2B input, compare: Out2 output
P8.0/TA0.0	57	H9	I/O	General-purpose digital I/O TA0 CCR0 capture: CCI0B input, compare: Out0 output
P8.1/TA0.1	58	H11	I/O	General-purpose digital I/O TA0 CCR1 capture: CCI1B input, compare: Out1 output
P8.2/TA0.2	59	H12	I/O	General-purpose digital I/O TA0 CCR2 capture: CCI2B input, compare: Out2 output
P8.3/TA0.3	60	G9	I/O	General-purpose digital I/O TA0 CCR3 capture: CCI3B input, compare: Out3 output
P8.4/TA0.4	61	G11	I/O	General-purpose digital I/O TA0 CCR4 capture: CCI4B input, compare: Out4 output
VCORE[2]	62	G12		Regulated core power supply output (internal use only, no external current loading)
DVSS2	63	F12		Digital ground supply
DVCC2	64	E12		Digital power supply
P8.5/TA1.0	65	F11	I/O	General-purpose digital I/O TA1 CCR0 capture: CCI0B input, compare: Out0 output
P8.6/TA1.1	66	E11	I/O	General-purpose digital I/O TA1 CCR1 capture: CCI1B input, compare: Out1 output
P8.7	67	D12	I/O	General-purpose digital I/O
P9.0/UCB2STE/UCA2CLK	68	D11	I/O	General-purpose digital I/O Slave transmit enable – USCI_B2 SPI mode Clock signal input – USCI_A2 SPI slave mode Clock signal output – USCI_A2 SPI master mode
P9.1/UCB2SIMO/UCB2SDA	69	F9	I/O	General-purpose digital I/O Slave in, master out – USCI_B2 SPI mode I2C data – USCI_B2 I2C mode
P9.2/UCB2SOMI/UCB2SCL	70	C12	I/O	General-purpose digital I/O Slave out, master in – USCI_B2 SPI mode I2C clock – USCI_B2 I2C mode

(2) VCORE is for internal use only. No external current loading is possible. VCORE should only be connected to the recommended capacitor value, C_{VCORE}.

Copyright © 2010–2013, Texas Instruments Incorporated

Table 2. Terminal Functions (continued)

TERMINAL			I/O[1]	DESCRIPTION
NAME	NO.			
	PZ	ZQW		
P9.3/UCB2CLK/UCA2STE	71	E9	I/O	General-purpose digital I/O Clock signal input – USCI_B2 SPI slave mode Clock signal output – USCI_B2 SPI master mode Slave transmit enable – USCI_A2 SPI mode
P9.4/UCA2TXD/UCA2SIMO	72	C11	I/O	General-purpose digital I/O Transmit data – USCI_A2 UART mode Slave in, master out – USCI_A2 SPI mode
P9.5/UCA2RXD/UCA2SOMI	73	B12	I/O	General-purpose digital I/O Receive data – USCI_A2 UART mode Slave out, master in – USCI_A2 SPI mode
P9.6	74	B11	I/O	General-purpose digital I/O
P9.7	75	A12	I/O	General-purpose digital I/O
P10.0/UCB3STE/UCA3CLK	76	D9	I/O	General-purpose digital I/O Slave transmit enable – USCI_B3 SPI mode Clock signal input – USCI_A3 SPI slave mode Clock signal output – USCI_A3 SPI master mode
P10.1/UCB3SIMO/UCB3SDA	77	A11	I/O	General-purpose digital I/O Slave in, master out – USCI_B3 SPI mode I2C data – USCI_B3 I2C mode
P10.2/UCB3SOMI/UCB3SCL	78	D8	I/O	General-purpose digital I/O Slave out, master in – USCI_B3 SPI mode I2C clock – USCI_B3 I2C mode
P10.3/UCB3CLK/UCA3STE	79	B10	I/O	General-purpose digital I/O Clock signal input – USCI_B3 SPI slave mode Clock signal output – USCI_B3 SPI master mode Slave transmit enable – USCI_A3 SPI mode
P10.4/UCA3TXD/UCA3SIMO	80	A10	I/O	General-purpose digital I/O Transmit data – USCI_A3 UART mode Slave in, master out – USCI_A3 SPI mode
P10.5/UCA3RXD/UCA3SOMI	81	B9	I/O	General-purpose digital I/O Receive data – USCI_A3 UART mode Slave out, master in – USCI_A3 SPI mode
P10.6	82	A9	I/O	General-purpose digital I/O
P10.7	83	B8	I/O	General-purpose digital I/O
P11.0/ACLK	84	A8	I/O	General-purpose digital I/O ACLK output (divided by 1, 2, 4, 8, 16, or 32)
P11.1/MCLK	85	D7	I/O	General-purpose digital I/O MCLK output
P11.2/SMCLK	86	A7	I/O	General-purpose digital I/O SMCLK output
DVCC4	87	B7		Digital power supply
DVSS4	88	B6		Digital ground supply
P5.2/XT2IN	89	A6	I/O	General-purpose digital I/O Input terminal for crystal oscillator XT2
P5.3/XT2OUT	90	A5	I/O	General-purpose digital I/O Output terminal of crystal oscillator XT2
TEST/SBWTCK[3]	91	D6	I	Test mode pin – Selects four wire JTAG operation. Spy-Bi-Wire input clock when Spy-Bi-Wire operation activated
PJ.0/TDO[4]	92	B5	I/O	General-purpose digital I/O JTAG test data output port
PJ.1/TDI/TCLK[4]	93	A4	I/O	General-purpose digital I/O JTAG test data input or test clock input

(3) See Bootstrap Loader (BSL) and JTAG Operation for use with BSL and JTAG functions
(4) See JTAG Operation for use with JTAG function.

Copyright © 2010–2013, Texas Instruments Incorporated

Table 2. Terminal Functions (continued)

TERMINAL			I/O[1]	DESCRIPTION
NAME	NO.			
	PZ	ZQW		
PJ.2/TMS[4]	94	D5	I/O	General-purpose digital I/O JTAG test mode select
PJ.3/TCK[4]	95	B4	I/O	General-purpose digital I/O JTAG test clock
$\overline{\text{RST}}$/NMI/SBWTDIO[3]	96	A3	I/O	Reset input active low[5] Non-maskable interrupt input Spy-Bi-Wire data input/output when Spy-Bi-Wire operation activated.
P6.0/A0	97	D4	I/O	General-purpose digital I/O Analog input A0 – ADC
P6.1/A1	98	B3	I/O	General-purpose digital I/O Analog input A1 – ADC
P6.2/A2	99	A2	I/O	General-purpose digital I/O Analog input A2 – ADC
P6.3/A3	100	B2	I/O	General-purpose digital I/O Analog input A3 – ADC
Reserved	N/A	[6]		

(5) When this pin is configured as rest, the internal pullup resistor is enabled by default.
(6) G5, E8, F8, G8, H8, E7, H7, E6, H6, E5, F5, H5, C3 are reserved and should be connected to ground.

Copyright © 2010–2013, Texas Instruments Incorporated

Development Tools Support

All MSP430™ microcontrollers are supported by a wide variety of software and hardware development tools. Tools are available from TI and various third parties. See them all at www.ti.com/msp430tools.

Hardware Features

See the *Code Composer Studio for MSP430 User's Guide* (SLAU157) for details on the available features.

MSP430 Architecture	4-Wire JTAG	2-Wire JTAG	Break-points (N)	Range Break-points	Clock Control	State Sequencer	Trace Buffer	LPMx.5 Debugging Support
MSP430Xv2	Yes	Yes	8	Yes	Yes	Yes	Yes	No

Recommended Hardware Options

Experimenter Boards

Experimenter Boards and Evaluation kits are available for some MSP430 devices. These kits feature additional hardware components and connectivity for full system evaluation and prototyping. See www.ti.com/msp430tools for details.

Debugging and Programming Tools

Hardware programming and debugging tools are available from TI and from its third party suppliers. See the full list of available tools at www.ti.com/msp430tools.

Production Programmers

The production programmers expedite loading firmware to devices by programming several devices simultaneously.

Part Number	PC Port	Features	Provider
MSP-GANG	Serial and USB	Program up to eight devices at a time. Works with PC or standalone.	Texas Instruments

Recommended Software Options

Integrated Development Environments

Software development tools are available from TI or from third parties. Open source solutions are also available.

This device is supported by Code Composer Studio™ IDE (CCS).

MSP430Ware

MSP430Ware is a collection of code examples, data sheets, and other design resources for all MSP430 devices delivered in a convenient package. In addition to providing a complete collection of existing MSP430 design resources, MSP430Ware also includes a high-level API called MSP430 Driver Library. This library makes it easy to program MSP430 hardware. MSP430Ware is available as a component of CCS or as a standalone package.

SYS/BIOS

SYS/BIOS is an advanced real-time operating system for the MSP430 microcontrollers. It features preemptive deterministic multi-tasking, hardware abstraction, memory management, and real-time analysis. SYS/BIOS is available free of charge and is provided with full source code.

Command-Line Programmer

MSP430 Flasher is an open-source, shell-based interface for programming MSP430 microcontrollers through a FET programmer or eZ430 using JTAG or Spy-Bi-Wire (SBW) communication. MSP430 Flasher can be used to download binary files (.txt or .hex) files directly to the MSP430 microcontroller without the need for an IDE.

Copyright © 2010–2013, Texas Instruments Incorporated

Community Resources

The following links connect to TI community resources. Linked contents are provided "AS IS" by the respective contributors. They do not constitute TI specifications and do not necessarily reflect TI's views; see TI's Terms of Use.

TI E2E Community

TI's Engineer-to-Engineer (E2E) Community. Created to foster collaboration among engineers. At e2e.ti.com, you can ask questions, share knowledge, explore ideas, and help solve problems with fellow engineers.

TI Embedded Processors Wiki

Texas Instruments Embedded Processors Wiki. Established to help developers get started with embedded processors from Texas Instruments and to foster innovation and growth of general knowledge about the hardware and software surrounding these devices.

Device and Development Tool Nomenclature

To designate the stages in the product development cycle, TI assigns prefixes to the part numbers of all MSP430™ MCU devices and support tools. Each MSP430™ MCU commercial family member has one of two prefixes: MSP or XMS (for example, MSP430F5259). Texas Instruments recommends two of three possible prefix designators for its support tools: MSP and MSPX. These prefixes represent evolutionary stages of product development from engineering prototypes (with XMS for devices and MSPX for tools) through fully qualified production devices and tools (with MSP for devices and MSP for tools).

Device development evolutionary flow:

XMS – Experimental device that is not necessarily representative of the final device's electrical specifications

MSP – Fully qualified production device

Support tool development evolutionary flow:

MSPX – Development-support product that has not yet completed Texas Instruments internal qualification testing.

MSP – Fully-qualified development-support product

XMS devices and MSPX development-support tools are shipped against the following disclaimer:

"Developmental product is intended for internal evaluation purposes."

MSP devices and MSP development-support tools have been characterized fully, and the quality and reliability of the device have been demonstrated fully. TI's standard warranty applies.

Predictions show that prototype devices (XMS) have a greater failure rate than the standard production devices. Texas Instruments recommends that these devices not be used in any production system because their expected end-use failure rate still is undefined. Only qualified production devices are to be used.

TI device nomenclature also includes a suffix with the device family name. This suffix indicates the package type (for example, PZP) and temperature range (for example, T). Figure 1 provides a legend for reading the complete device name for any family member.

Copyright © 2010–2013, Texas Instruments Incorporated

Part Number Decoder

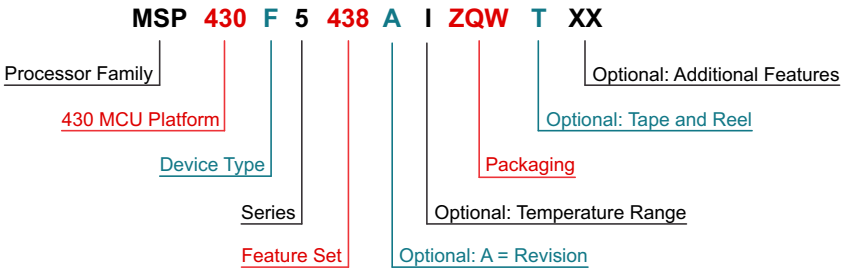

Processor Family	CC = Embedded RF Radio MSP = Mixed Signal Processor XMS = Experimental Silicon	
430 MCU Platform	TI's Low Power Microcontroller Platform	
Device Type	**Memory Type** C = ROM F = Flash FR = FRAM G = Flash (Value Line) L = No Nonvolatile Memory	**Specialized Application** AFE = Analog Front End BT = Preprogrammed with Bluetooth BQ = Contactless Power CG = ROM Medical FE = Flash Energy Meter FG = Flash Medical FW = Flash Electronic Flow Meter
Series	1 Series = Up to 8 MHz 2 Series = Up to 16 MHz 3 Series = Legacy 4 Series = Up to 16 MHz w/ LCD	5 Series = Up to 25 MHz 6 Series = Up to 25 MHz w/ LCD 0 = Low Voltage Series
Feature Set	Various Levels of Integration Within a Series	
Optional: A = Revision	N/A	
Optional: Temperature Range	S = 0°C to 50°C C = 0°C to 70°C I = -40°C to 85°C T = -40°C to 105°C	
Packaging	www.ti.com/packaging	
Optional: Tape and Reel	T = Small Reel (7 inch) R = Large Reel (11 inch) No Markings = Tube or Tray	
Optional: Additional Features	*-EP = Enhanced Product (-40°C to 105°C) *-HT = Extreme Temperature Parts (-55°C to 150°C)	

Figure 1. Device Nomenclature

Copyright © 2010–2013, Texas Instruments Incorporated

Short-Form Description

CPU

The MSP430 CPU has a 16-bit RISC architecture that is highly transparent to the application. All operations, other than program-flow instructions, are performed as register operations in conjunction with seven addressing modes for source operand and four addressing modes for destination operand.

The CPU is integrated with 16 registers that provide reduced instruction execution time. The register-to-register operation execution time is one cycle of the CPU clock.

Four of the registers, R0 to R3, are dedicated as program counter, stack pointer, status register, and constant generator, respectively. The remaining registers are general-purpose registers.

Peripherals are connected to the CPU using data, address, and control buses, and can be handled with all instructions.

The instruction set consists of the original 51 instructions with three formats and seven address modes and additional instructions for the expanded address range. Each instruction can operate on word and byte data.

Program Counter	PC/R0
Stack Pointer	SP/R1
Status Register	SR/CG1/R2
Constant Generator	CG2/R3
General-Purpose Register	R4
General-Purpose Register	R5
General-Purpose Register	R6
General-Purpose Register	R7
General-Purpose Register	R8
General-Purpose Register	R9
General-Purpose Register	R10
General-Purpose Register	R11
General-Purpose Register	R12
General-Purpose Register	R13
General-Purpose Register	R14
General-Purpose Register	R15

Operating Modes

The MSP430 has one active mode and six software selectable low-power modes of operation. An interrupt event can wake up the device from any of the low-power modes, service the request, and restore back to the low-power mode on return from the interrupt program.

The following operating modes can be configured by software:

- Active mode (AM)
  - All clocks are active
- Low-power mode 0 (LPM0)
  - CPU is disabled
  - ACLK and SMCLK remain active
  - MCLK is disabled
  - FLL loop control remains active
- Low-power mode 1 (LPM1)
  - CPU is disabled
  - FLL loop control is disabled
  - ACLK and SMCLK remain active
  - MCLK is disabled
- Low-power mode 2 (LPM2)
  - CPU is disabled
  - MCLK, FLL loop control, and DCOCLK are disabled
  - DCO's dc-generator remains enabled
  - ACLK remains active
- Low-power mode 3 (LPM3)
  - CPU is disabled
  - MCLK, FLL loop control, and DCOCLK are disabled
  - DCO's dc generator is disabled
  - ACLK remains active
- Low-power mode 4 (LPM4)
  - CPU is disabled
  - ACLK is disabled
  - MCLK, FLL loop control, and DCOCLK are disabled
  - DCO's dc generator is disabled
  - Crystal oscillator is stopped
  - Complete data retention
- Low-power mode 4.5 (LPM4.5)
  - Internal regulator disabled
  - No data retention
  - Wakeup from $\overline{\text{RST}}$, digital I/O

Copyright © 2010–2013, Texas Instruments Incorporated

Interrupt Vector Addresses

The interrupt vectors and the power-up start address are located in the address range 0FFFFh to 0FF80h. The vector contains the 16-bit address of the appropriate interrupt-handler instruction sequence.

Table 3. Interrupt Sources, Flags, and Vectors

INTERRUPT SOURCE	INTERRUPT FLAG	SYSTEM INTERRUPT	WORD ADDRESS	PRIORITY
System Reset Power-Up External Reset Watchdog Timeout, Password Violation Flash Memory Password Violation PMM Password Violation	WDTIFG, KEYV (SYSRSTIV)(1) (2)	Reset	0FFFEh	63, highest
System NMI PMM Vacant Memory Access JTAG Mailbox	SVMLIFG, SVMHIFG, DLYLIFG, DLYHIFG, VLRLIFG, VLRHIFG, VMAIFG, JMBNIFG, JMBOUTIFG (SYSSNIV)(1)	(Non)maskable	0FFFCh	62
User NMI NMI Oscillator Fault Flash Memory Access Violation	NMIIFG, OFIFG, ACCVIFG (SYSUNIV)(1) (2)	(Non)maskable	0FFFAh	61
TB0	TBCCR0 CCIFG0 (3)	Maskable	0FFF8h	60
TB0	TBCCR1 CCIFG1 ... TBCCR6 CCIFG6, TBIFG (TBIV)(1) (3)	Maskable	0FFF6h	59
Watchdog Timer_A Interval Timer Mode	WDTIFG	Maskable	0FFF4h	58
USCI_A0 Receive or Transmit	UCA0RXIFG, UCA0TXIFG (UCA0IV)(1) (3)	Maskable	0FFF2h	57
USCI_B0 Receive or Transmit	UCB0RXIFG, UCB0TXIFG (UCAB0IV)(1) (3)	Maskable	0FFF0h	56
ADC12_A	ADC12IFG0 ... ADC12IFG15 (ADC12IV)(1) (3)	Maskable	0FFEEh	55
TA0	TA0CCR0 CCIFG0(3)	Maskable	0FFECh	54
TA0	TA0CCR1 CCIFG1 ... TA0CCR4 CCIFG4, TA0IFG (TA0IV)(1) (3)	Maskable	0FFEAh	53
USCI_A2 Receive or Transmit	UCA2RXIFG, UCA2TXIFG (UCA2IV)(1) (3)	Maskable	0FFE8h	52
USCI_B2 Receive or Transmit	UCB2RXIFG, UCB2TXIFG (UCB2IV)(1) (3)	Maskable	0FFE6h	51
DMA	DMA0IFG, DMA1IFG, DMA2IFG (DMAIV)(1) (3)	Maskable	0FFE4h	50
TA1	TA1CCR0 CCIFG0(3)	Maskable	0FFE2h	49
TA1	TA1CCR1 CCIFG1 ... TA1CCR2 CCIFG2, TA1IFG (TA1IV)(1) (3)	Maskable	0FFE0h	48
I/O Port P1	P1IFG.0 to P1IFG.7 (P1IV)(1) (3)	Maskable	0FFDEh	47
USCI_A1 Receive or Transmit	UCA1RXIFG, UCA1TXIFG (UCA1IV)(1) (3)	Maskable	0FFDCh	46
USCI_B1 Receive or Transmit	UCB1RXIFG, UCB1TXIFG (UCB1IV)(1) (3)	Maskable	0FFDAh	45
USCI_A3 Receive or Transmit	UCA3RXIFG, UCA3TXIFG (UCA3IV)(1) (3)	Maskable	0FFD8h	44
USCI_B3 Receive or Transmit	UCB3RXIFG, UCB3TXIFG (UCB3IV)(1) (3)	Maskable	0FFD6h	43
I/O Port P2	P2IFG.0 to P2IFG.7 (P2IV)(1) (3)	Maskable	0FFD4h	42
RTC_A	RTCRDYIFG, RTCTEVIFG, RTCAIFG, RT0PSIFG, RT1PSIFG (RTCIV)(1) (3)	Maskable	0FFD2h	41
Reserved	Reserved(4)		0FFD0h	40
			⋮	⋮
			0FF80h	0, lowest

(1) Multiple source flags
(2) A reset is generated if the CPU tries to fetch instructions from within peripheral space or vacant memory space.
(Non)maskable: the individual interrupt-enable bit can disable an interrupt event, but the general-interrupt enable cannot disable it.
(3) Interrupt flags are located in the module.
(4) Reserved interrupt vectors at addresses are not used in this device and can be used for regular program code if necessary. To maintain compatibility with other devices, it is recommended to reserve these locations.

Copyright © 2010–2013, Texas Instruments Incorporated

Memory Organization

		MSP430BT5190
Memory (flash) Main: interrupt vector Main: code memory	Total Size Flash Flash	256 KB 00FFFFh–00FF80h 045BFFh–005C00h
Main: code memory	Bank D	64 KB 03FFFFh–030000h
	Bank C	64 KB 02FFFFh–020000h
	Bank B	64 KB 01FFFFh–010000h
	Bank A	64 KB 045BFFh–040000h 00FFFFh–005C00h
RAM	Size	16 KB
	Sector 3	4 KB 005BFFh–004C00h
	Sector 2	4 KB 004BFFh–003C00h
	Sector 1	4 KB 003BFFh–002C00h
	Sector 0	4 KB 002BFFh–001C00h
Information memory (flash)	Info A	128 B 0019FFh–001980h
	Info B	128 B 00197Fh–001900h
	Info C	128 B 0018FFh–001880h
	Info D	128 B 00187Fh–001800h
Bootstrap loader (BSL) memory (Flash)	BSL 3	512 B 0017FFh–001600h
	BSL 2	512 B 0015FFh–001400h
	BSL 1	512 B 0013FFh–001200h
	BSL 0	512 B 0011FFh–001000h
Peripherals	Size	4KB 000FFFFh–000000h

Copyright © 2010–2013, Texas Instruments Incorporated

Bootstrap Loader (BSL)

The BSL enables users to program the flash memory or RAM using a UART serial interface. Access to the device memory via the BSL is protected by an user-defined password. Usage of the BSL requires four pins as shown in Table 4. BSL entry requires a specific entry sequence on the $\overline{\text{RST}}$/NMI/SBWTDIO and TEST/SBWTCK pins. For further details on interfacing to development tools and device programmers, see the *MSP430(tm) Hardware Tools User's Guide* (SLAU278). For a complete description of the features of the BSL and its implementation, see the *MSP430 Programming Via the Bootstrap Loader User's Guide* (SLAU319).

Table 4. BSL Pin Requirements and Functions

DEVICE SIGNAL	BSL FUNCTION
$\overline{\text{RST}}$/NMI/SBWTDIO	Entry sequence signal
TEST/SBWTCK	Entry sequence signal
P1.1	Data transmit
P1.2	Data receive
VCC	Power supply
VSS	Ground supply

JTAG Operation

JTAG Standard Interface

The MSP430 family supports the standard JTAG interface which requires four signals for sending and receiving data. The JTAG signals are shared with general-purpose I/O. The TEST/SBWTCK pin is used to enable the JTAG signals. In addition to these signals, the $\overline{\text{RST}}$/NMI/SBWTDIO is required to interface with MSP430 development tools and device programmers. The JTAG pin requirements are shown in Table 5. For further details on interfacing to development tools and device programmers, see the *MSP430(tm) Hardware Tools User's Guide* (SLAU278). For a complete description of the features of the JTAG interface and its implementation, see *MSP430 Programming Via the JTAG Interface* (SLAU320).

Table 5. JTAG Pin Requirements and Functions

DEVICE SIGNAL	DIRECTION	FUNCTION
PJ.3/TCK	IN	JTAG clock input
PJ.2/TMS	IN	JTAG state control
PJ.1/TDI/TCLK	IN	JTAG data input; TCLK input
PJ.0/TDO	OUT	JTAG data output
TEST/SBWTCK	IN	Enable JTAG pins
$\overline{\text{RST}}$/NMI/SBWTDIO	IN	External reset
VCC		Power supply
VSS		Ground supply

Copyright © 2010–2013, Texas Instruments Incorporated

Spy-Bi-Wire Interface

In addition to the standard JTAG interface, the MSP430 family supports the two wire Spy-Bi-Wire interface. Spy-Bi-Wire can be used to interface with MSP430 development tools and device programmers. The Spy-Bi-Wire interface pin requirements are shown in Table 6. For further details on interfacing to development tools and device programmers, see the *MSP430(tm) Hardware Tools User's Guide* (SLAU278). For a complete description of the features of the JTAG interface and its implementation, see *MSP430 Programming Via the JTAG Interface* (SLAU320).

Table 6. Spy-Bi-Wire Pin Requirements and Functions

DEVICE SIGNAL	DIRECTION	FUNCTION
TEST/SBWTCK	IN	Spy-Bi-Wire clock input
$\overline{\text{RST}}$/NMI/SBWTDIO	IN, OUT	Spy-Bi-Wire data input/output
VCC		Power supply
VSS		Ground supply

Flash Memory

The flash memory can be programmed via the JTAG port, Spy-Bi-Wire (SBW), the BSL, or in-system by the CPU. The CPU can perform single-byte, single-word, and long-word writes to the flash memory. Features of the flash memory include:

- Flash memory has n segments of main memory and four segments of information memory (A to D) of 128 bytes each. Each segment in main memory is 512 bytes in size.
- Segments 0 to n may be erased in one step, or each segment may be individually erased.
- Segments A to D can be erased individually. Segments A to D are also called *information memory*.
- Segment A can be locked separately.

RAM Memory

The RAM memory is made up of n sectors. Each sector can be completely powered down to save leakage, however all data is lost. Features of the RAM memory include:

- RAM memory has n sectors. The size of a sector can be found in Memory Organization.
- Each sector 0 to n can be complete disabled; however, data retention is lost.
- Each sector 0 to n automatically enters low-power retention mode when possible.
- For devices that contain USB memory, the USB memory can be used as normal RAM if USB is not required.

Copyright © 2010–2013, Texas Instruments Incorporated

Peripherals

Peripherals are connected to the CPU through data, address, and control buses and can be handled using all instructions. For complete module descriptions, see the *MSP430x5xx and MSP430x6xx Family User's Guide* (SLAU208).

Digital I/O

There are up to ten 8-bit I/O ports implemented: For 100-pin options, P1 through P10 are complete. P11 contains three individual I/O ports. For 80-pin options, P1 through P7 are complete. P8 contains seven individual I/O ports. P9 through P11 do not exist. Port PJ contains four individual I/O ports, common to all devices.

- All individual I/O bits are independently programmable.
- Any combination of input, output, and interrupt conditions is possible.
- Pullup or pulldown on all ports is programmable.
- Drive strength on all ports is programmable.
- Edge-selectable interrupt and LPM4.5 wakeup input capability is available for all bits of ports P1 and P2.
- Read and write access to port-control registers is supported by all instructions.
- Ports can be accessed byte-wise (P1 through P11) or word-wise in pairs (PA through PF).

Oscillator and System Clock

The clock system is supported by the Unified Clock System (UCS) module that includes support for a 32-kHz watch crystal oscillator (XT1 LF mode), an internal very-low-power low-frequency oscillator (VLO), an internal trimmed low-frequency oscillator (REFO), an integrated internal digitally controlled oscillator (DCO), and a high-frequency crystal oscillator (XT1 HF mode or XT2). The UCS module is designed to meet the requirements of both low system cost and low power consumption. The UCS module features digital frequency locked loop (FLL) hardware that, in conjunction with a digital modulator, stabilizes the DCO frequency to a programmable multiple of the selected FLL reference frequency. The internal DCO provides a fast turn-on clock source and stabilizes in less than 5 µs. The UCS module provides the following clock signals:

- Auxiliary clock (ACLK), sourced from a 32-kHz watch crystal, a high-frequency crystal, the internal low-frequency oscillator (VLO), the trimmed low-frequency oscillator (REFO), or the internal digitally controlled oscillator DCO.
- Main clock (MCLK), the system clock used by the CPU. MCLK can be sourced by same sources made available to ACLK.
- Sub-Main clock (SMCLK), the subsystem clock used by the peripheral modules. SMCLK can be sourced by same sources made available to ACLK.
- ACLK/n, the buffered output of ACLK, ACLK/2, ACLK/4, ACLK/8, ACLK/16, ACLK/32.

Power Management Module (PMM)

The PMM includes an integrated voltage regulator that supplies the core voltage to the device and contains programmable output levels to provide for power optimization. The PMM also includes supply voltage supervisor (SVS) and supply voltage monitoring (SVM) circuitry, as well as brownout protection. The brownout circuit is implemented to provide the proper internal reset signal to the device during power-on and power-off. The SVS and SVM circuitry detects if the supply voltage drops below a user-selectable level and supports both supply voltage supervision (the device is automatically reset) and supply voltage monitoring (the device is not automatically reset). SVS and SVM circuitry is available on the primary supply and core supply.

Hardware Multiplier (MPY)

The multiplication operation is supported by a dedicated peripheral module. The module performs operations with 32-bit, 24-bit, 16-bit, and 8-bit operands. The module supports signed and unsigned multiplication as well as signed and unsigned multiply-and-accumulate operations.

Copyright © 2010–2013, Texas Instruments Incorporated

Real-Time Clock (RTC_A)

The RTC_A module can be used as a general-purpose 32-bit counter (counter mode) or as an integrated real-time clock (RTC) (calendar mode). In counter mode, the RTC_A also includes two independent 8-bit timers that can be cascaded to form a 16-bit timer/counter. Both timers can be read and written by software. Calendar mode integrates an internal calendar which compensates for months with less than 31 days and includes leap year correction. The RTC_A also supports flexible alarm functions and offset-calibration hardware.

Watchdog Timer (WDT_A)

The primary function of the WDT_A module is to perform a controlled system restart after a software problem occurs. If the selected time interval expires, a system reset is generated. If the watchdog function is not needed in an application, the module can be configured as an interval timer and can generate interrupts at selected time intervals.

Copyright © 2010–2013, Texas Instruments Incorporated

System Module (SYS)

The SYS module handles many of the system functions within the device. These include power on reset and power up clear handling, NMI source selection and management, reset interrupt vector generators, boot strap loader entry mechanisms, as well as, configuration management (device descriptors). It also includes a data exchange mechanism via JTAG called a JTAG mailbox that can be used in the application.

Table 7. System Module Interrupt Vector Registers

INTERRUPT VECTOR REGISTER	ADDRESS	INTERRUPT EVENT	VALUE	PRIORITY
SYSRSTIV, System Reset	019Eh	No interrupt pending	00h	
		Brownout (BOR)	02h	Highest
		$\overline{\text{RST}}$/NMI (POR)	04h	
		PMMSWBOR (BOR)	06h	
		Wakeup from LPMx.5	08h	
		Security violation (BOR)	0Ah	
		SVSL (POR)	0Ch	
		SVSH (POR)	0Eh	
		SVML_OVP (POR)	10h	
		SVMH_OVP (POR)	12h	
		PMMSWPOR (POR)	14h	
		WDT timeout (PUC)	16h	
		WDT password violation (PUC)	18h	
		KEYV flash password violation (PUC)	1Ah	
		Reserved	1Ch	
		Peripheral area fetch (PUC)	1Eh	
		PMM password violation (PUC)	20h	
		Reserved	22h to 3Eh	Lowest
SYSSNIV, System NMI	019Ch	No interrupt pending	00h	
		SVMLIFG	02h	Highest
		SVMHIFG	04h	
		SVSMLDLYIFG	06h	
		SVSMHDLYIFG	08h	
		VMAIFG	0Ah	
		JMBINIFG	0Ch	
		JMBOUTIFG	0Eh	
		SVMLVLRIFG	10h	
		SVMHVLRIFG	12h	
		Reserved	14h to 1Eh	Lowest
SYSUNIV, User NMI	019Ah	No interrupt pending	00h	
		NMIFG	02h	Highest
		OFIFG	04h	
		ACCVIFG	06h	
		Reserved	08h	
		Reserved	0Ah to 1Eh	Lowest

Copyright © 2010–2013, Texas Instruments Incorporated

DMA Controller

The DMA controller allows movement of data from one memory address to another without CPU intervention. For example, the DMA controller can be used to move data from the ADC12_A conversion memory to RAM. Using the DMA controller can increase the throughput of peripheral modules. The DMA controller reduces system power consumption by allowing the CPU to remain in sleep mode, without having to awaken to move data to or from a peripheral.

Table 8. DMA Trigger Assignments(1)

TRIGGER	CHANNEL		
	0	1	2
0	DMAREQ	DMAREQ	DMAREQ
1	TA0CCR0 CCIFG	TA0CCR0 CCIFG	TA0CCR0 CCIFG
2	TA0CCR2 CCIFG	TA0CCR2 CCIFG	TA0CCR2 CCIFG
3	TA1CCR0 CCIFG	TA1CCR0 CCIFG	TA1CCR0 CCIFG
4	TA1CCR2 CCIFG	TA1CCR2 CCIFG	TA1CCR2 CCIFG
5	TB0CCR0 CCIFG	TB0CCR0 CCIFG	TB0CCR0 CCIFG
6	TB0CCR2 CCIFG	TB0CCR2 CCIFG	TB0CCR2 CCIFG
7	Reserved	Reserved	Reserved
8	Reserved	Reserved	Reserved
9	Reserved	Reserved	Reserved
10	Reserved	Reserved	Reserved
11	Reserved	Reserved	Reserved
12	Reserved	Reserved	Reserved
13	Reserved	Reserved	Reserved
14	Reserved	Reserved	Reserved
15	Reserved	Reserved	Reserved
16	UCA0RXIFG	UCA0RXIFG	UCA0RXIFG
17	UCA0TXIFG	UCA0TXIFG	UCA0TXIFG
18	UCB0RXIFG	UCB0RXIFG	UCB0RXIFG
19	UCB0TXIFG	UCB0TXIFG	UCB0TXIFG
20	UCA1RXIFG	UCA1RXIFG	UCA1RXIFG
21	UCA1TXIFG	UCA1TXIFG	UCA1TXIFG
22	UCB1RXIFG	UCB1RXIFG	UCB1RXIFG
23	UCB1TXIFG	UCB1TXIFG	UCB1TXIFG
24	ADC12IFGx	ADC12IFGx	ADC12IFGx
25	Reserved	Reserved	Reserved
26	Reserved	Reserved	Reserved
27	Reserved	Reserved	Reserved
28	Reserved	Reserved	Reserved
29	MPY ready	MPY ready	MPY ready
30	DMA2IFG	DMA0IFG	DMA1IFG
31	DMAE0	DMAE0	DMAE0

(1) Reserved DMA triggers may be used by other devices in the family. Reserved DMA triggers do not cause any DMA trigger event when selected.

Copyright © 2010–2013, Texas Instruments Incorporated

Universal Serial Communication Interface (USCI)

The USCI modules are used for serial data communication. The USCI module supports synchronous communication protocols such as SPI (3 or 4 pin) and I^2C, and asynchronous communication protocols such as UART, enhanced UART with automatic baudrate detection, and IrDA. Each USCI module contains two portions, A and B.

The USCI_An module provides support for SPI (3 pin or 4 pin), UART, enhanced UART, or IrDA.

The USCI_Bn module provides support for SPI (3 pin or 4 pin) or I2C.

The MSP430BT5190 includes four complete USCI modules (n = 0 to 3).

TA0

TA0 is a 16-bit timer/counter (Timer_A type) with five capture/compare registers. It can support multiple capture/compares, PWM outputs, and interval timing. It also has extensive interrupt capabilities. Interrupts may be generated from the counter on overflow conditions and from each of the capture/compare registers.

Table 9. TA0 Signal Connections

INPUT PIN NUMBER	DEVICE INPUT SIGNAL	MODULE INPUT SIGNAL	MODULE BLOCK	MODULE OUTPUT SIGNAL	DEVICE OUTPUT SIGNAL	OUTPUT PIN NUMBER
PZ, ZQW						PZ, ZQW
17, H1-P1.0	TA0CLK	TACLK	Timer	NA	NA	
	ACLK	ACLK				
	SMCLK	SMCLK				
17, H1-P1.0	TA0CLK	$\overline{\text{TACLK}}$				
18, H4-P1.1	TA0.0	CCI0A	CCR0	TA0	TA0.0	18, H4-P1.1
57, H9-P8.0	TA0.0	CCI0B				57, H9-P8.0
	DV_{SS}	GND				ADC12 (internal) ADC12SHSx = {1}
	DV_{CC}	V_{CC}				
19, J4-P1.2	TA0.1	CCI1A	CCR1	TA1	TA0.1	19, J4-P1.2
58, H11-P8.1	TA0.1	CCI1B				58, H11-P8.1
	DV_{SS}	GND				
	DV_{CC}	V_{CC}				
20, J1-P1.3	TA0.2	CCI2A	CCR2	TA2	TA0.2	20, J1-P1.3
59, H12-P8.2	TA0.2	CCI2B				59, H12-P8.2
	DV_{SS}	GND				
	DV_{CC}	V_{CC}				
21, J2-P1.4	TA0.3	CCI3A	CCR3	TA3	TA0.3	21, J2-P1.4
60, G9-P8.3	TA0.3	CCI3B				60, G9-P8.3
	DV_{SS}	GND				
	DV_{CC}	V_{CC}				
22, K1-P1.5	TA0.4	CCI4A	CCR4	TA4	TA0.4	22, K1-P1.5
61, G11-P8.4	TA0.4	CCI4B				61, G11-P8.4
	DV_{SS}	GND				
	DV_{CC}	V_{CC}				

Copyright © 2010–2013, Texas Instruments Incorporated

TA1

TA1 is a 16-bit timer/counter (Timer_A type) with three capture/compare registers. It can support multiple capture/compares, PWM outputs, and interval timing. It also has extensive interrupt capabilities. Interrupts may be generated from the counter on overflow conditions and from each of the capture/compare registers.

Table 10. TA1 Signal Connections

INPUT PIN NUMBER	DEVICE INPUT SIGNAL	MODULE INPUT SIGNAL	MODULE BLOCK	MODULE OUTPUT SIGNAL	DEVICE OUTPUT SIGNAL	OUTPUT PIN NUMBER
PZ, ZQW						PZ, ZQW
25, M1-P2.0	TA1CLK	TACLK	Timer	NA	NA	
	ACLK	ACLK				
	SMCLK	SMCLK				
25, M1-P2.0	TA1CLK	$\overline{\text{TACLK}}$				
26, L2-P2.1	TA1.0	CCI0A	CCR0	TA0	TA1.0	26, L2-P2.1
65, F11-P8.5	TA1.0	CCI0B				65, F11-P8.5
	DV_{SS}	GND				
	DV_{CC}	V_{CC}				
27, M2-P2.2	TA1.1	CCI1A	CCR1	TA1	TA1.1	27, M2-P2.2
66, E11-P8.6	TA1.1	CCI1B				66, E11-P8.6
	DV_{SS}	GND				
	DV_{CC}	V_{CC}				
28, L3-P2.3	TA1.2	CCI2A	CCR2	TA2	TA1.2	28, L3-P2.3
56, J12-P7.3	TA1.2	CCI2B				56, J12-P7.3
	DV_{SS}	GND				
	DV_{CC}	V_{CC}				

Copyright © 2010–2013, Texas Instruments Incorporated

TB0

TB0 is a 16-bit timer/counter (Timer_B type) with seven capture/compare registers. It can support multiple capture/compares, PWM outputs, and interval timing. It also has extensive interrupt capabilities. Interrupts may be generated from the counter on overflow conditions and from each of the capture/compare registers.

Table 11. TB0 Signal Connections

INPUT PIN NUMBER	DEVICE INPUT SIGNAL	MODULE INPUT SIGNAL	MODULE BLOCK	MODULE OUTPUT SIGNAL	DEVICE OUTPUT SIGNAL	OUTPUT PIN NUMBER
PZ, ZQW						PZ, ZQW
50, M12-P4.7	TB0CLK	TBCLK	Timer	NA	NA	
	ACLK	ACLK				
	SMCLK	SMCLK				
50, M12-P4.7	TB0CLK	$\overline{\text{TBCLK}}$				
43, J8-P4.0	TB0.0	CCI0A	CCR0	TB0	TB0.0	43, J8-P4.0
43, J8-P4.0	TB0.0	CCI0B				ADC12 (internal) ADC12SHSx = {2}
	DV_{SS}	GND				
	DV_{CC}	V_{CC}				
44, M9-P4.1	TB0.1	CCI1A	CCR1	TB1	TB0.1	44, M9-P4.1
44, M9-P4.1	TB0.1	CCI1B				ADC12 (internal) ADC12SHSx = {3}
	DV_{SS}	GND				
	DV_{CC}	V_{CC}				
45, L9-P4.2	TB0.2	CCI2A	CCR2	TB2	TB0.2	45, L9-P4.2
45, L9-P4.2	TB0.2	CCI2B				
	DV_{SS}	GND				
	DV_{CC}	V_{CC}				
46, L10-P4.3	TB0.3	CCI3A	CCR3	TB3	TB0.3	46, L10-P4.3
46, L10-P4.3	TB0.3	CCI3B				
	DV_{SS}	GND				
	DV_{CC}	V_{CC}				
47, M10-P4.4	TB0.4	CCI4A	CCR4	TB4	TB0.4	47, M10-P4.4
47, M10-P4.4	TB0.4	CCI4B				
	DV_{SS}	GND				
	DV_{CC}	V_{CC}				
48, L11-P4.5	TB0.5	CCI5A	CCR5	TB5	TB0.5	48, L11-P4.5
48, L11-P4.5	TB0.5	CCI5B				
	DV_{SS}	GND				
	DV_{CC}	V_{CC}				
49, M11-P4.6	TB0.6	CCI6A	CCR6	TB6	TB0.6	49, M11-P4.6
	ACLK (internal)	CCI6B				
	DV_{SS}	GND				
	DV_{CC}	V_{CC}				

ADC12_A

The ADC12_A module supports fast 12-bit analog-to-digital conversions. The module implements a 12-bit SAR core, sample select control, reference generator, and a 16-word conversion-and-control buffer. The conversion-and-control buffer allows up to 16 independent ADC samples to be converted and stored without any CPU intervention.

CRC16

The CRC16 module produces a signature based on a sequence of entered data values and can be used for data checking purposes. The CRC16 module signature is based on the CRC-CCITT standard.

REF Voltage Reference

The reference module (REF) is responsible for generation of all critical reference voltages that can be used by the various analog peripherals in the device.

Embedded Emulation Module (EEM) (L Version)

The EEM supports real-time in-system debugging. The L version of the EEM implemented has the following features:

- Eight hardware triggers or breakpoints on memory access
- Two hardware trigger or breakpoint on CPU register write access
- Up to ten hardware triggers can be combined to form complex triggers or breakpoints
- Two cycle counters
- Sequencer
- State storage
- Clock control on module level

Copyright © 2010–2013, Texas Instruments Incorporated

Peripheral File Map

Table 12. Peripherals

MODULE NAME	BASE ADDRESS	OFFSET ADDRESS RANGE
Special Functions (see Table 13)	0100h	000h-01Fh
PMM (see Table 14)	0120h	000h-010h
Flash Control (see Table 15)	0140h	000h-00Fh
CRC16 (see Table 16)	0150h	000h-007h
RAM Control (see Table 17)	0158h	000h-001h
Watchdog (see Table 18)	015Ch	000h-001h
UCS (see Table 19)	0160h	000h-01Fh
SYS (see Table 20)	0180h	000h-01Fh
Shared Reference (see Table 21)	01B0h	000h-001h
Port P1, P2 (see Table 22)	0200h	000h-01Fh
Port P3, P4 (see Table 23)	0220h	000h-00Bh
Port P5, P6 (see Table 24)	0240h	000h-00Bh
Port P7, P8 (see Table 25)	0260h	000h-00Bh
Port P9, P10 (see Table 26)	0280h	000h-00Bh
Port P11 (see Table 27)	02A0h	000h-00Ah
Port PJ (see Table 28)	0320h	000h-01Fh
TA0 (see Table 29)	0340h	000h-02Eh
TA1 (see Table 30)	0380h	000h-02Eh
TB0 (see Table 31)	03C0h	000h-02Eh
Real-Time Clock (RTC_A) (see Table 32)	04A0h	000h-01Bh
32-Bit Hardware Multiplier (see Table 33)	04C0h	000h-02Fh
DMA General Control (see Table 34)	0500h	000h-00Fh
DMA Channel 0 (see Table 34)	0510h	000h-00Ah
DMA Channel 1 (see Table 34)	0520h	000h-00Ah
DMA Channel 2 (see Table 34)	0530h	000h-00Ah
USCI_A0 (see Table 35)	05C0h	000h-01Fh
USCI_B0 (see Table 36)	05E0h	000h-01Fh
USCI_A1 (see Table 37)	0600h	000h-01Fh
USCI_B1 (see Table 38)	0620h	000h-01Fh
USCI_A2 (see Table 39)	0640h	000h-01Fh
USCI_B2 (see Table 40)	0660h	000h-01Fh
USCI_A3 (see Table 41)	0680h	000h-01Fh
USCI_B3 (see Table 42)	06A0h	000h-01Fh
ADC12_A (see Table 43)	0700h	000h-03Eh

Copyright © 2010–2013, Texas Instruments Incorporated

Table 13. Special Function Registers (Base Address: 0100h)

REGISTER DESCRIPTION	REGISTER	OFFSET
SFR interrupt enable	SFRIE1	00h
SFR interrupt flag	SFRIFG1	02h
SFR reset pin control	SFRRPCR	04h

Table 14. PMM Registers (Base Address: 0120h)

REGISTER DESCRIPTION	REGISTER	OFFSET
PMM Control 0	PMMCTL0	00h
PMM control 1	PMMCTL1	02h
SVS high side control	SVSMHCTL	04h
SVS low side control	SVSMLCTL	06h
PMM interrupt flags	PMMIFG	0Ch
PMM interrupt enable	PMMIE	0Eh
PMM power mode 5 control	PM5CTL0	10h

Table 15. Flash Control Registers (Base Address: 0140h)

REGISTER DESCRIPTION	REGISTER	OFFSET
Flash control 1	FCTL1	00h
Flash control 3	FCTL3	04h
Flash control 4	FCTL4	06h

Table 16. CRC16 Registers (Base Address: 0150h)

REGISTER DESCRIPTION	REGISTER	OFFSET
CRC data input	CRC16DI	00h
CRC data input reverse byte	CRCDIRB	02h
CRC initialization and result	CRCINIRES	04h
CRC result reverse byte	CRCRESR	06h

Table 17. RAM Control Registers (Base Address: 0158h)

REGISTER DESCRIPTION	REGISTER	OFFSET
RAM control 0	RCCTL0	00h

Table 18. Watchdog Registers (Base Address: 015Ch)

REGISTER DESCRIPTION	REGISTER	OFFSET
Watchdog timer control	WDTCTL	00h

Table 19. UCS Registers (Base Address: 0160h)

REGISTER DESCRIPTION	REGISTER	OFFSET
UCS control 0	UCSCTL0	00h
UCS control 1	UCSCTL1	02h
UCS control 2	UCSCTL2	04h
UCS control 3	UCSCTL3	06h
UCS control 4	UCSCTL4	08h
UCS control 5	UCSCTL5	0Ah
UCS control 6	UCSCTL6	0Ch
UCS control 7	UCSCTL7	0Eh
UCS control 8	UCSCTL8	10h

Copyright © 2010–2013, Texas Instruments Incorporated

Table 20. SYS Registers (Base Address: 0180h)

REGISTER DESCRIPTION	REGISTER	OFFSET
System control	SYSCTL	00h
Bootstrap loader configuration area	SYSBSLC	02h
JTAG mailbox control	SYSJMBC	06h
JTAG mailbox input 0	SYSJMBI0	08h
JTAG mailbox input 1	SYSJMBI1	0Ah
JTAG mailbox output 0	SYSJMBO0	0Ch
JTAG mailbox output 1	SYSJMBO1	0Eh
Bus Error vector generator	SYSBERRIV	18h
User NMI vector generator	SYSUNIV	1Ah
System NMI vector generator	SYSSNIV	1Ch
Reset vector generator	SYSRSTIV	1Eh

Table 21. Shared Reference Registers (Base Address: 01B0h)

REGISTER DESCRIPTION	REGISTER	OFFSET
Shared reference control	REFCTL	00h

Table 22. Port P1, P2 Registers (Base Address: 0200h)

REGISTER DESCRIPTION	REGISTER	OFFSET
Port P1 input	P1IN	00h
Port P1 output	P1OUT	02h
Port P1 direction	P1DIR	04h
Port P1 pullup/pulldown enable	P1REN	06h
Port P1 drive strength	P1DS	08h
Port P1 selection	P1SEL	0Ah
Port P1 interrupt vector word	P1IV	0Eh
Port P1 interrupt edge select	P1IES	18h
Port P1 interrupt enable	P1IE	1Ah
Port P1 interrupt flag	P1IFG	1Ch
Port P2 input	P2IN	01h
Port P2 output	P2OUT	03h
Port P2 direction	P2DIR	05h
Port P2 pullup/pulldown enable	P2REN	07h
Port P2 drive strength	P2DS	09h
Port P2 selection	P2SEL	0Bh
Port P2 interrupt vector word	P2IV	1Eh
Port P2 interrupt edge select	P2IES	19h
Port P2 interrupt enable	P2IE	1Bh
Port P2 interrupt flag	P2IFG	1Dh

Copyright © 2010–2013, Texas Instruments Incorporated

Table 23. Port P3, P4 Registers (Base Address: 0220h)

REGISTER DESCRIPTION	REGISTER	OFFSET
Port P3 input	P3IN	00h
Port P3 output	P3OUT	02h
Port P3 direction	P3DIR	04h
Port P3 pullup/pulldown enable	P3REN	06h
Port P3 drive strength	P3DS	08h
Port P3 selection	P3SEL	0Ah
Port P4 input	P4IN	01h
Port P4 output	P4OUT	03h
Port P4 direction	P4DIR	05h
Port P4 pullup/pulldown enable	P4REN	07h
Port P4 drive strength	P4DS	09h
Port P4 selection	P4SEL	0Bh

Table 24. Port P5, P6 Registers (Base Address: 0240h)

REGISTER DESCRIPTION	REGISTER	OFFSET
Port P5 input	P5IN	00h
Port P5 output	P5OUT	02h
Port P5 direction	P5DIR	04h
Port P5 pullup/pulldown enable	P5REN	06h
Port P5 drive strength	P5DS	08h
Port P5 selection	P5SEL	0Ah
Port P6 input	P6IN	01h
Port P6 output	P6OUT	03h
Port P6 direction	P6DIR	05h
Port P6 pullup/pulldown enable	P6REN	07h
Port P6 drive strength	P6DS	09h
Port P6 selection	P6SEL	0Bh

Table 25. Port P7, P8 Registers (Base Address: 0260h)

REGISTER DESCRIPTION	REGISTER	OFFSET
Port P7 input	P7IN	00h
Port P7 output	P7OUT	02h
Port P7 direction	P7DIR	04h
Port P7 pullup/pulldown enable	P7REN	06h
Port P7 drive strength	P7DS	08h
Port P7 selection	P7SEL	0Ah
Port P8 input	P8IN	01h
Port P8 output	P8OUT	03h
Port P8 direction	P8DIR	05h
Port P8 pullup/pulldown enable	P8REN	07h
Port P8 drive strength	P8DS	09h
Port P8 selection	P8SEL	0Bh

Copyright © 2010–2013, Texas Instruments Incorporated

Table 26. Port P9, P10 Registers (Base Address: 0280h)

REGISTER DESCRIPTION	REGISTER	OFFSET
Port P9 input	P9IN	00h
Port P9 output	P9OUT	02h
Port P9 direction	P9DIR	04h
Port P9 pullup/pulldown enable	P9REN	06h
Port P9 drive strength	P9DS	08h
Port P9 selection	P9SEL	0Ah
Port P10 input	P10IN	01h
Port P10 output	P10OUT	03h
Port P10 direction	P10DIR	05h
Port P10 pullup/pulldown enable	P10REN	07h
Port P10 drive strength	P10DS	09h
Port P10 selection	P10SEL	0Bh

Table 27. Port P11 Registers (Base Address: 02A0h)

REGISTER DESCRIPTION	REGISTER	OFFSET
Port P11 input	P11IN	00h
Port P11 output	P11OUT	02h
Port P11 direction	P11DIR	04h
Port P11 pullup/pulldown enable	P11REN	06h
Port P11 drive strength	P11DS	08h
Port P11 selection	P11SEL	0Ah

Table 28. Port J Registers (Base Address: 0320h)

REGISTER DESCRIPTION	REGISTER	OFFSET
Port PJ input	PJIN	00h
Port PJ output	PJOUT	02h
Port PJ direction	PJDIR	04h
Port PJ pullup/pulldown enable	PJREN	06h
Port PJ drive strength	PJDS	08h

Copyright © 2010–2013, Texas Instruments Incorporated

Table 29. TA0 Registers (Base Address: 0340h)

REGISTER DESCRIPTION	REGISTER	OFFSET
TA0 control	TA0CTL	00h
Capture/compare control 0	TA0CCTL0	02h
Capture/compare control 1	TA0CCTL1	04h
Capture/compare control 2	TA0CCTL2	06h
Capture/compare control 3	TA0CCTL3	08h
Capture/compare control 4	TA0CCTL4	0Ah
TA0 counter register	TA0R	10h
Capture/compare register 0	TA0CCR0	12h
Capture/compare register 1	TA0CCR1	14h
Capture/compare register 2	TA0CCR2	16h
Capture/compare register 3	TA0CCR3	18h
Capture/compare register 4	TA0CCR4	1Ah
TA0 expansion register 0	TA0EX0	20h
TA0 interrupt vector	TA0IV	2Eh

Table 30. TA1 Registers (Base Address: 0380h)

REGISTER DESCRIPTION	REGISTER	OFFSET
TA1 control	TA1CTL	00h
Capture/compare control 0	TA1CCTL0	02h
Capture/compare control 1	TA1CCTL1	04h
Capture/compare control 2	TA1CCTL2	06h
TA1 counter register	TA1R	10h
Capture/compare register 0	TA1CCR0	12h
Capture/compare register 1	TA1CCR1	14h
Capture/compare register 2	TA1CCR2	16h
TA1 expansion register 0	TA1EX0	20h
TA1 interrupt vector	TA1IV	2Eh

Copyright © 2010–2013, Texas Instruments Incorporated

Table 31. TB0 Registers (Base Address: 03C0h)

REGISTER DESCRIPTION	REGISTER	OFFSET
TB0 control	TB0CTL	00h
Capture/compare control 0	TB0CCTL0	02h
Capture/compare control 1	TB0CCTL1	04h
Capture/compare control 2	TB0CCTL2	06h
Capture/compare control 3	TB0CCTL3	08h
Capture/compare control 4	TB0CCTL4	0Ah
Capture/compare control 5	TB0CCTL5	0Ch
Capture/compare control 6	TB0CCTL6	0Eh
TB0 register	TB0R	10h
Capture/compare register 0	TB0CCR0	12h
Capture/compare register 1	TB0CCR1	14h
Capture/compare register 2	TB0CCR2	16h
Capture/compare register 3	TB0CCR3	18h
Capture/compare register 4	TB0CCR4	1Ah
Capture/compare register 5	TB0CCR5	1Ch
Capture/compare register 6	TB0CCR6	1Eh
TB0 expansion register 0	TB0EX0	20h
TB0 interrupt vector	TB0IV	2Eh

Table 32. Real-Time Clock Registers (Base Address: 04A0h)

REGISTER DESCRIPTION	REGISTER	OFFSET
RTC control 0	RTCCTL0	00h
RTC control 1	RTCCTL1	01h
RTC control 2	RTCCTL2	02h
RTC control 3	RTCCTL3	03h
RTC prescaler 0 control	RTCPS0CTL	08h
RTC prescaler 1 control	RTCPS1CTL	0Ah
RTC prescaler 0	RTCPS0	0Ch
RTC prescaler 1	RTCPS1	0Dh
RTC interrupt vector word	RTCIV	0Eh
RTC seconds/counter register 1	RTCSEC/RTCNT1	10h
RTC minutes/counter register 2	RTCMIN/RTCNT2	11h
RTC hours/counter register 3	RTCHOUR/RTCNT3	12h
RTC day of week/counter register 4	RTCDOW/RTCNT4	13h
RTC days	RTCDAY	14h
RTC month	RTCMON	15h
RTC year low	RTCYEARL	16h
RTC year high	RTCYEARH	17h
RTC alarm minutes	RTCAMIN	18h
RTC alarm hours	RTCAHOUR	19h
RTC alarm day of week	RTCADOW	1Ah
RTC alarm days	RTCADAY	1Bh

Copyright © 2010–2013, Texas Instruments Incorporated

Table 33. 32-Bit Hardware Multiplier Registers (Base Address: 04C0h)

REGISTER DESCRIPTION	REGISTER	OFFSET
16-bit operand 1 – multiply	MPY	00h
16-bit operand 1 – signed multiply	MPYS	02h
16-bit operand 1 – multiply accumulate	MAC	04h
16-bit operand 1 – signed multiply accumulate	MACS	06h
16-bit operand 2	OP2	08h
16 × 16 result low word	RESLO	0Ah
16 × 16 result high word	RESHI	0Ch
16 × 16 sum extension register	SUMEXT	0Eh
32-bit operand 1 – multiply low word	MPY32L	10h
32-bit operand 1 – multiply high word	MPY32H	12h
32-bit operand 1 – signed multiply low word	MPYS32L	14h
32-bit operand 1 – signed multiply high word	MPYS32H	16h
32-bit operand 1 – multiply accumulate low word	MAC32L	18h
32-bit operand 1 – multiply accumulate high word	MAC32H	1Ah
32-bit operand 1 – signed multiply accumulate low word	MACS32L	1Ch
32-bit operand 1 – signed multiply accumulate high word	MACS32H	1Eh
32-bit operand 2 – low word	OP2L	20h
32-bit operand 2 – high word	OP2H	22h
32 × 32 result 0 – least significant word	RES0	24h
32 × 32 result 1	RES1	26h
32 × 32 result 2	RES2	28h
32 × 32 result 3 – most significant word	RES3	2Ah
MPY32 control register 0	MPY32CTL0	2Ch

Copyright © 2010–2013, Texas Instruments Incorporated

Table 34. DMA Registers (Base Address DMA General Control: 0500h, DMA Channel 0: 0510h, DMA Channel 1: 0520h, DMA Channel 2: 0530h)

REGISTER DESCRIPTION	REGISTER	OFFSET
DMA channel 0 control	DMA0CTL	00h
DMA channel 0 source address low	DMA0SAL	02h
DMA channel 0 source address high	DMA0SAH	04h
DMA channel 0 destination address low	DMA0DAL	06h
DMA channel 0 destination address high	DMA0DAH	08h
DMA channel 0 transfer size	DMA0SZ	0Ah
DMA channel 1 control	DMA1CTL	00h
DMA channel 1 source address low	DMA1SAL	02h
DMA channel 1 source address high	DMA1SAH	04h
DMA channel 1 destination address low	DMA1DAL	06h
DMA channel 1 destination address high	DMA1DAH	08h
DMA channel 1 transfer size	DMA1SZ	0Ah
DMA channel 2 control	DMA2CTL	00h
DMA channel 2 source address low	DMA2SAL	02h
DMA channel 2 source address high	DMA2SAH	04h
DMA channel 2 destination address low	DMA2DAL	06h
DMA channel 2 destination address high	DMA2DAH	08h
DMA channel 2 transfer size	DMA2SZ	0Ah
DMA module control 0	DMACTL0	00h
DMA module control 1	DMACTL1	02h
DMA module control 2	DMACTL2	04h
DMA module control 3	DMACTL3	06h
DMA module control 4	DMACTL4	08h
DMA interrupt vector	DMAIV	0Eh

Table 35. USCI_A0 Registers (Base Address: 05C0h)

REGISTER DESCRIPTION	REGISTER	OFFSET
USCI control 1	UCA0CTL1	00h
USCI control 0	UCA0CTL0	01h
USCI baud rate 0	UCA0BR0	06h
USCI baud rate 1	UCA0BR1	07h
USCI modulation control	UCA0MCTL	08h
USCI status	UCA0STAT	0Ah
USCI receive buffer	UCA0RXBUF	0Ch
USCI transmit buffer	UCA0TXBUF	0Eh
USCI LIN control	UCA0ABCTL	10h
USCI IrDA transmit control	UCA0IRTCTL	12h
USCI IrDA receive control	UCA0IRRCTL	13h
USCI interrupt enable	UCA0IE	1Ch
USCI interrupt flags	UCA0IFG	1Dh
USCI interrupt vector word	UCA0IV	1Eh

Copyright © 2010–2013, Texas Instruments Incorporated

Table 36. USCI_B0 Registers (Base Address: 05E0h)

REGISTER DESCRIPTION	REGISTER	OFFSET
USCI synchronous control 1	UCB0CTL1	00h
USCI synchronous control 0	UCB0CTL0	01h
USCI synchronous bit rate 0	UCB0BR0	06h
USCI synchronous bit rate 1	UCB0BR1	07h
USCI synchronous status	UCB0STAT	0Ah
USCI synchronous receive buffer	UCB0RXBUF	0Ch
USCI synchronous transmit buffer	UCB0TXBUF	0Eh
USCI I2C own address	UCB0I2COA	10h
USCI I2C slave address	UCB0I2CSA	12h
USCI interrupt enable	UCB0IE	1Ch
USCI interrupt flags	UCB0IFG	1Dh
USCI interrupt vector word	UCB0IV	1Eh

Table 37. USCI_A1 Registers (Base Address: 0600h)

REGISTER DESCRIPTION	REGISTER	OFFSET
USCI control 1	UCA1CTL1	00h
USCI control 0	UCA1CTL0	01h
USCI baud rate 0	UCA1BR0	06h
USCI baud rate 1	UCA1BR1	07h
USCI modulation control	UCA1MCTL	08h
USCI status	UCA1STAT	0Ah
USCI receive buffer	UCA1RXBUF	0Ch
USCI transmit buffer	UCA1TXBUF	0Eh
USCI LIN control	UCA1ABCTL	10h
USCI IrDA transmit control	UCA1IRTCTL	12h
USCI IrDA receive control	UCA1IRRCTL	13h
USCI interrupt enable	UCA1IE	1Ch
USCI interrupt flags	UCA1IFG	1Dh
USCI interrupt vector word	UCA1IV	1Eh

Copyright © 2010–2013, Texas Instruments Incorporated

Table 38. USCI_B1 Registers (Base Address: 0620h)

REGISTER DESCRIPTION	REGISTER	OFFSET
USCI synchronous control 1	UCB1CTL1	00h
USCI synchronous control 0	UCB1CTL0	01h
USCI synchronous bit rate 0	UCB1BR0	06h
USCI synchronous bit rate 1	UCB1BR1	07h
USCI synchronous status	UCB1STAT	0Ah
USCI synchronous receive buffer	UCB1RXBUF	0Ch
USCI synchronous transmit buffer	UCB1TXBUF	0Eh
USCI I2C own address	UCB1I2COA	10h
USCI I2C slave address	UCB1I2CSA	12h
USCI interrupt enable	UCB1IE	1Ch
USCI interrupt flags	UCB1IFG	1Dh
USCI interrupt vector word	UCB1IV	1Eh

Table 39. USCI_A2 Registers (Base Address: 0640h)

REGISTER DESCRIPTION	REGISTER	OFFSET
USCI control 1	UCA2CTL1	00h
USCI control 0	UCA2CTL0	01h
USCI baud rate 0	UCA2BR0	06h
USCI baud rate 1	UCA2BR1	07h
USCI modulation control	UCA2MCTL	08h
USCI status	UCA2STAT	0Ah
USCI receive buffer	UCA2RXBUF	0Ch
USCI transmit buffer	UCA2TXBUF	0Eh
USCI LIN control	UCA2ABCTL	10h
USCI IrDA transmit control	UCA2IRTCTL	12h
USCI IrDA receive control	UCA2IRRCTL	13h
USCI interrupt enable	UCA2IE	1Ch
USCI interrupt flags	UCA2IFG	1Dh
USCI interrupt vector word	UCA2IV	1Eh

Table 40. USCI_B2 Registers (Base Address: 0660h)

REGISTER DESCRIPTION	REGISTER	OFFSET
USCI synchronous control 1	UCB2CTL1	00h
USCI synchronous control 0	UCB2CTL0	01h
USCI synchronous bit rate 0	UCB2BR0	06h
USCI synchronous bit rate 1	UCB2BR1	07h
USCI synchronous status	UCB2STAT	0Ah
USCI synchronous receive buffer	UCB2RXBUF	0Ch
USCI synchronous transmit buffer	UCB2TXBUF	0Eh
USCI I2C own address	UCB2I2COA	10h
USCI I2C slave address	UCB2I2CSA	12h
USCI interrupt enable	UCB2IE	1Ch
USCI interrupt flags	UCB2IFG	1Dh
USCI interrupt vector word	UCB2IV	1Eh

Copyright © 2010–2013, Texas Instruments Incorporated

Table 41. USCI_A3 Registers (Base Address: 0680h)

REGISTER DESCRIPTION	REGISTER	OFFSET
USCI control 1	UCA3CTL1	00h
USCI control 0	UCA3CTL0	01h
USCI baud rate 0	UCA3BR0	06h
USCI baud rate 1	UCA3BR1	07h
USCI modulation control	UCA3MCTL	08h
USCI status	UCA3STAT	0Ah
USCI receive buffer	UCA3RXBUF	0Ch
USCI transmit buffer	UCA3TXBUF	0Eh
USCI LIN control	UCA3ABCTL	10h
USCI IrDA transmit control	UCA3IRTCTL	12h
USCI IrDA receive control	UCA3IRRCTL	13h
USCI interrupt enable	UCA3IE	1Ch
USCI interrupt flags	UCA3IFG	1Dh
USCI interrupt vector word	UCA3IV	1Eh

Table 42. USCI_B3 Registers (Base Address: 06A0h)

REGISTER DESCRIPTION	REGISTER	OFFSET
USCI synchronous control 1	UCB3CTL1	00h
USCI synchronous control 0	UCB3CTL0	01h
USCI synchronous bit rate 0	UCB3BR0	06h
USCI synchronous bit rate 1	UCB3BR1	07h
USCI synchronous status	UCB3STAT	0Ah
USCI synchronous receive buffer	UCB3RXBUF	0Ch
USCI synchronous transmit buffer	UCB3TXBUF	0Eh
USCI I2C own address	UCB3I2COA	10h
USCI I2C slave address	UCB3I2CSA	12h
USCI interrupt enable	UCB3IE	1Ch
USCI interrupt flags	UCB3IFG	1Dh
USCI interrupt vector word	UCB3IV	1Eh

Copyright © 2010–2013, Texas Instruments Incorporated

Table 43. ADC12_A Registers (Base Address: 0700h)

REGISTER DESCRIPTION	REGISTER	OFFSET
Control register 0	ADC12CTL0	00h
Control register 1	ADC12CTL1	02h
Control register 2	ADC12CTL2	04h
Interrupt-flag register	ADC12IFG	0Ah
Interrupt-enable register	ADC12IE	0Ch
Interrupt-vector-word register	ADC12IV	0Eh
ADC memory-control register 0	ADC12MCTL0	10h
ADC memory-control register 1	ADC12MCTL1	11h
ADC memory-control register 2	ADC12MCTL2	12h
ADC memory-control register 3	ADC12MCTL3	13h
ADC memory-control register 4	ADC12MCTL4	14h
ADC memory-control register 5	ADC12MCTL5	15h
ADC memory-control register 6	ADC12MCTL6	16h
ADC memory-control register 7	ADC12MCTL7	17h
ADC memory-control register 8	ADC12MCTL8	18h
ADC memory-control register 9	ADC12MCTL9	19h
ADC memory-control register 10	ADC12MCTL10	1Ah
ADC memory-control register 11	ADC12MCTL11	1Bh
ADC memory-control register 12	ADC12MCTL12	1Ch
ADC memory-control register 13	ADC12MCTL13	1Dh
ADC memory-control register 14	ADC12MCTL14	1Eh
ADC memory-control register 15	ADC12MCTL15	1Fh
Conversion memory 0	ADC12MEM0	20h
Conversion memory 1	ADC12MEM1	22h
Conversion memory 2	ADC12MEM2	24h
Conversion memory 3	ADC12MEM3	26h
Conversion memory 4	ADC12MEM4	28h
Conversion memory 5	ADC12MEM5	2Ah
Conversion memory 6	ADC12MEM6	2Ch
Conversion memory 7	ADC12MEM7	2Eh
Conversion memory 8	ADC12MEM8	30h
Conversion memory 9	ADC12MEM9	32h
Conversion memory 10	ADC12MEM10	34h
Conversion memory 11	ADC12MEM11	36h
Conversion memory 12	ADC12MEM12	38h
Conversion memory 13	ADC12MEM13	3Ah
Conversion memory 14	ADC12MEM14	3Ch
Conversion memory 15	ADC12MEM15	3Eh

Copyright © 2010–2013, Texas Instruments Incorporated

Absolute Maximum Ratings[1]

over operating free-air temperature range (unless otherwise noted)

Voltage applied at V_{CC} to V_{SS}	–0.3 V to 4.1 V
Voltage applied to any pin (excluding VCORE)[2]	–0.3 V to V_{CC} + 0.3 V
Diode current at any device pin	±2 mA
Storage temperature range, T_{stg} [3]	–55°C to 105°C
Maximum junction temperature, T_J	95°C

(1) Stresses beyond those listed under "absolute maximum ratings" may cause permanent damage to the device. These are stress ratings only, and functional operation of the device at these or any other conditions beyond those indicated under "recommended operating conditions" is not implied. Exposure to absolute-maximum-rated conditions for extended periods may affect device reliability.
(2) All voltages referenced to V_{SS}. VCORE is for internal device use only. No external DC loading or voltage should be applied.
(3) Higher temperature may be applied during board soldering according to the current JEDEC J-STD-020 specification with peak reflow temperatures not higher than classified on the device label on the shipping boxes or reels.

Thermal Packaging Characteristics

				VALUE	UNIT
θ_{JA}	Junction-to-ambient thermal resistance, still air	Low-K board (JESD51-3)	QFP (PZ)	50.1	°C/W
			BGA (ZQW)	60	
		High-K board (JESD51-7)	QFP (PZ)	40.8	
			BGA (ZQW)	42	
θ_{JC}	Junction-to-case thermal resistance		QFP (PZ)	8.9	°C/W
			BGA (ZQW)	8	

Recommended Operating Conditions

Typical values are specified at V_{CC} = 3.3 V and T_A = 25°C (unless otherwise noted)

			MIN	NOM	MAX	UNIT
V_{CC}	Supply voltage during program execution and flash programming ($AV_{CC} = DV_{CC1/2/3/4} = DV_{CC}$)[1][2]		1.8		3.6	V
V_{SS}	Supply voltage ($AV_{SS} = DV_{SS1/2/3/4} = DV_{SS}$)			0		V
T_A	Operating free-air temperature	I version	–40		85	°C
T_J	Operating junction temperature	I version	–40		85	°C
CV_{CORE}	Recommended capacitor at VCORE			470		nF
C_{DVCC}/C_{VCORE}	Capacitor ratio of DVCC to VCORE		10			
f_{SYSTEM}	Processor frequency (maximum MCLK frequency)[3] [4] (see Figure 2)	PMMCOREVx = 0, 1.8 V ≤ V_{CC} ≤ 3.6 V	0		8.0	MHz
		PMMCOREVx = 1, 2.0 V ≤ V_{CC} ≤ 3.6 V	0		12.0	
		PMMCOREVx = 2, 2.2 V ≤ V_{CC} ≤ 3.6 V	0		20.0	
		PMMCOREVx = 3, 2.4 V ≤ V_{CC} ≤ 3.6 V	0		25.0	

(1) It is recommended to power AVCC and DVCC from the same source. A maximum difference of 0.3 V between AVCC and DVCC can be tolerated during power up and operation.
(2) The minimum supply voltage is defined by the supervisor SVS levels when it is enabled. See the PMM, SVS High Side threshold parameters for the exact values and further details.
(3) The MSP430 CPU is clocked directly with MCLK. Both the high and low phase of MCLK must not exceed the pulse duration of the specified maximum frequency.
(4) Modules may have a different maximum input clock specification. See the specification of the respective module in this data sheet.

Copyright © 2010–2013, Texas Instruments Incorporated

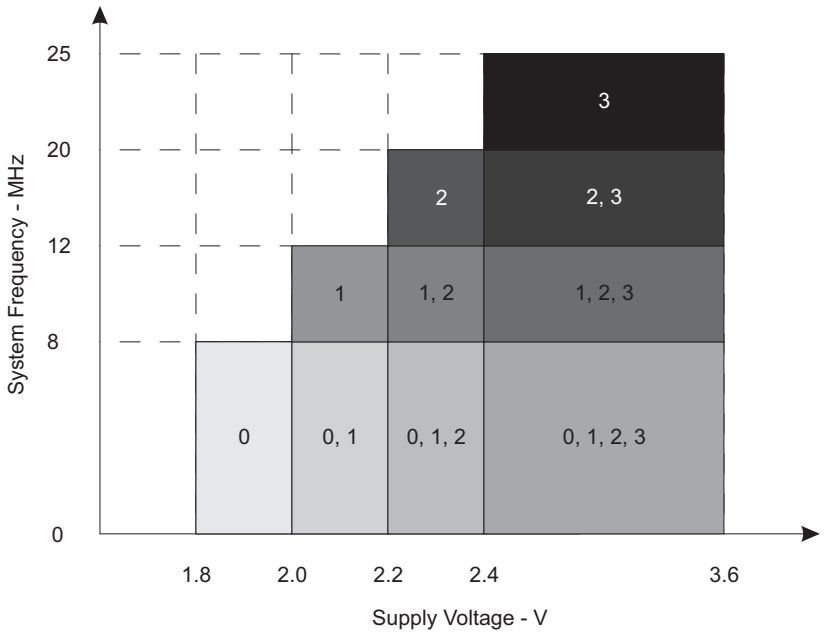

The numbers within the fields denote the supported PMMCOREVx settings.

Figure 2. Frequency vs Supply Voltage

Electrical Characteristics

Active Mode Supply Current Into V_{CC} Excluding External Current

over recommended operating free-air temperature (unless otherwise noted)(1) (2) (3)

PARAMETER	EXECUTION MEMORY	V_{CC}	PMMCOREVx	FREQUENCY ($f_{DCO} = f_{MCLK} = f_{SMCLK}$)										UNIT
				1 MHz		8 MHz		12 MHz		20 MHz		25 MHz		
				TYP	MAX	TYP	MAX	TYP	MAX	TYP	MAX	TYP	MAX	
$I_{AM,\ Flash}$	Flash	3 V	0	0.29	0.33	1.84	2.08							mA
			1	0.32		2.08		3.10						
			2	0.33		2.24		3.50		6.37				
			3	0.35		2.36		3.70		6.75		8.90	9.60	
$I_{AM,\ RAM}$	RAM	3 V	0	0.17	0.19	0.88	0.99							mA
			1	0.18		1.00		1.47						
			2	0.19		1.13		1.68		2.82				
			3	0.20		1.20		1.78		3.00		4.50	4.90	

(1) All inputs are tied to 0 V or to V_{CC}. Outputs do not source or sink any current.
(2) The currents are characterized with a Micro Crystal MS1V-T1K crystal with a load capacitance of 12.5 pF. The internal and external load capacitance are chosen to closely match the required 12.5 pF.
(3) Characterized with program executing typical data processing.
f_{ACLK} = 32786 Hz, $f_{DCO} = f_{MCLK} = f_{SMCLK}$ at specified frequency.
XTS = CPUOFF = SCG0 = SCG1 = OSCOFF= SMCLKOFF = 0.

Copyright © 2010–2013, Texas Instruments Incorporated

Low-Power Mode Supply Currents (Into V_{CC}) Excluding External Current

over recommended ranges of supply voltage and operating free-air temperature (unless otherwise noted)(1) (2)

PARAMETER		V_{CC}	PMMCOREVx	-40°C		25°C		60°C		85°C		UNIT
				TYP	MAX	TYP	MAX	TYP	MAX	TYP	MAX	
$I_{LPM0,1MHz}$	Low-power mode 0(3) (4)	2.2 V	0	69	93	69	93	69	93	69	93	µA
		3 V	3	73	100	73	100	73	100	73	100	
I_{LPM2}	Low-power mode 2(5) (4)	2.2 V	0	11	15.5	11	15.5	11	15.5	11	15.5	µA
		3 V	3	11.7	17.5	11.7	17.5	11.7	17.5	11.7	17.5	
$I_{LPM3,XT1LF}$	Low-power mode 3, crystal mode(6) (4)	2.2 V	0	1.4		1.7		2.6		6.6		µA
			1	1.5		1.8		2.9		9.9		
			2	1.5		2.0		3.3		10.1		
		3 V	0	1.8		2.1	2.4	2.8		7.1	13.6	
			1	1.8		2.3		3.1		10.5		
			2	1.9		2.4		3.5		10.6		
			3	2.0		2.3	2.6	3.9		11.8	14.8	
$I_{LPM3,VLO}$	Low-power mode 3, VLO mode(7) (4)	3 V	0	1.0		1.2	1.42	2.0		5.8	12.9	µA
			1	1.0		1.3		2.3		6.0		
			2	1.1		1.4		2.8		6.2		
			3	1.2		1.4	1.62	3.0		6.2	13.9	
I_{LPM4}	Low-power mode 4(8) (4)	3 V	0	1.1		1.2	1.35	1.9		5.7	12.9	µA
			1	1.2		1.2		2.2		5.9		
			2	1.3		1.3		2.6		6.1		
			3	1.3		1.3	1.52	2.9		6.2	13.9	
$I_{LPM4.5}$	Low-power mode 4.5(9)	3 V		0.10		0.10	0.13	0.20		0.50	1.14	µA

(1) All inputs are tied to 0 V or to V_{CC}. Outputs do not source or sink any current.
(2) The currents are characterized with a Micro Crystal MS1V-T1K crystal with a load capacitance of 12.5 pF. The internal and external load capacitance are chosen to closely match the required 12.5 pF.
(3) Current for watchdog timer clocked by SMCLK included. ACLK = low frequency crystal operation (XTS = 0, XT1DRIVEx = 0). CPUOFF = 1, SCG0 = 0, SCG1 = 0, OSCOFF = 0 (LPM0); f_{ACLK} = 32768 Hz, f_{MCLK} = 0 MHz, f_{SMCLK} = f_{DCO} = 1 MHz
(4) Current for brownout, high side supervisor (SVS_H) normal mode included. Low side supervisor and monitors disabled (SVS_L, SVM_L). High side monitor disabled (SVM_H). RAM retention enabled.
(5) Current for watchdog timer and RTC clocked by ACLK included. ACLK = low frequency crystal operation (XTS = 0, XT1DRIVEx = 0). CPUOFF = 1, SCG0 = 0, SCG1 = 1, OSCOFF = 0 (LPM2); f_{ACLK} = 32768 Hz, f_{MCLK} = 0 MHz, f_{SMCLK} = f_{DCO} = 0 MHz; DCO setting = 1 MHz operation, DCO bias generator enabled.
(6) Current for watchdog timer and RTC clocked by ACLK included. ACLK = low frequency crystal operation (XTS = 0, XT1DRIVEx = 0). CPUOFF = 1, SCG0 = 1, SCG1 = 1, OSCOFF = 0 (LPM3); f_{ACLK} = 32768 Hz, f_{MCLK} = f_{SMCLK} = f_{DCO} = 0 MHz
(7) Current for watchdog timer and RTC clocked by ACLK included. ACLK = VLO. CPUOFF = 1, SCG0 = 1, SCG1 = 1, OSCOFF = 0 (LPM3); f_{ACLK} = f_{VLO}, f_{MCLK} = f_{SMCLK} = f_{DCO} = 0 MHz
(8) CPUOFF = 1, SCG0 = 1, SCG1 = 1, OSCOFF = 1 (LPM4); f_{DCO} = f_{ACLK} = f_{MCLK} = f_{SMCLK} = 0 MHz
(9) Internal regulator disabled. No data retention. CPUOFF = 1, SCG0 = 1, SCG1 = 1, OSCOFF = 1, PMMREGOFF = 1 (LPM4.5); f_{DCO} = f_{ACLK} = f_{MCLK} = f_{SMCLK} = 0 MHz

Copyright © 2010–2013, Texas Instruments Incorporated

Schmitt-Trigger Inputs – General Purpose I/O[1]

over recommended ranges of supply voltage and operating free-air temperature (unless otherwise noted)

PARAMETER		TEST CONDITIONS	V_{CC}	MIN	TYP	MAX	UNIT
V_{IT+}	Positive-going input threshold voltage		1.8 V	0.80		1.40	V
			3 V	1.50		2.10	
V_{IT-}	Negative-going input threshold voltage		1.8 V	0.45		1.00	V
			3 V	0.75		1.65	
V_{hys}	Input voltage hysteresis ($V_{IT+} – V_{IT-}$)		1.8 V	0.3		0.85	V
			3 V	0.4		1.0	
R_{Pull}	Pullup or pulldown resistor[2]	For pullup: $V_{IN} = V_{SS}$ For pulldown: $V_{IN} = V_{CC}$		20	35	50	kΩ
C_I	Input capacitance	$V_{IN} = V_{SS}$ or V_{CC}			5		pF

(1) Same parametrics apply to clock input pin when crystal bypass mode is used on XT1 (XIN) or XT2 (XT2IN).
(2) Also applies to $\overline{RST}$ pin when the pullup or pulldown resistor is enabled.

Inputs – Ports P1 and P2[1]

over recommended ranges of supply voltage and operating free-air temperature (unless otherwise noted)

PARAMETER		TEST CONDITIONS	V_{CC}	MIN	MAX	UNIT
$t_{(int)}$	External interrupt timing[2]	Port P1, P2: P1.x to P2.x, External trigger pulse duration to set interrupt flag	2.2 V, 3 V	20		ns

(1) Some devices may contain additional ports with interrupts. See the block diagram and terminal function descriptions.
(2) An external signal sets the interrupt flag every time the minimum interrupt pulse duration $t_{(int)}$ is met. It may be set by trigger signals shorter than $t_{(int)}$.

Leakage Current – General Purpose I/O

over recommended ranges of supply voltage and operating free-air temperature (unless otherwise noted)

PARAMETER		TEST CONDITIONS	V_{CC}	MIN	MAX	UNIT
$I_{lkg(Px.y)}$	High-impedance leakage current	[1] [2]	1.8 V, 3 V		±50	nA

(1) The leakage current is measured with V_{SS} or V_{CC} applied to the corresponding pins, unless otherwise noted.
(2) The leakage of the digital port pins is measured individually. The port pin is selected for input and the pullup or pulldown resistor is disabled.

Copyright © 2010–2013, Texas Instruments Incorporated

Outputs – General Purpose I/O (Full Drive Strength)

over recommended ranges of supply voltage and operating free-air temperature (unless otherwise noted)

PARAMETER		TEST CONDITIONS	V_{CC}	MIN	MAX	UNIT
V_{OH}	High-level output voltage	$I_{(OHmax)}$ = –3 mA (1)	1.8 V	V_{CC} – 0.25	V_{CC}	V
		$I_{(OHmax)}$ = –10 mA (2)		V_{CC} – 0.60	V_{CC}	
		$I_{(OHmax)}$ = –5 mA (1)	3 V	V_{CC} – 0.25	V_{CC}	
		$I_{(OHmax)}$ = –15 mA (2)		V_{CC} – 0.60	V_{CC}	
V_{OL}	Low-level output voltage	$I_{(OLmax)}$ = 3 mA (1)	1.8 V	V_{SS}	V_{SS} + 0.25	V
		$I_{(OLmax)}$ = 10 mA (2)		V_{SS}	V_{SS} + 0.60	
		$I_{(OLmax)}$ = 5 mA (1)	3 V	V_{SS}	V_{SS} + 0.25	
		$I_{(OLmax)}$ = 15 mA (2)		V_{SS}	V_{SS} + 0.60	

(1) The maximum total current, $I_{(OHmax)}$ and $I_{(OLmax)}$, for all outputs combined should not exceed ±48 mA to hold the maximum voltage drop specified.
(2) The maximum total current, $I_{(OHmax)}$ and $I_{(OLmax)}$, for all outputs combined should not exceed ±100 mA to hold the maximum voltage drop specified.

Outputs – General Purpose I/O (Reduced Drive Strength)

over recommended ranges of supply voltage and operating free-air temperature (unless otherwise noted) (1)

PARAMETER		TEST CONDITIONS	V_{CC}	MIN	MAX	UNIT
V_{OH}	High-level output voltage	$I_{(OHmax)}$ = –1 mA (2)	1.8 V	V_{CC} – 0.25	V_{CC}	V
		$I_{(OHmax)}$ = –3 mA (3)		V_{CC} – 0.60	V_{CC}	
		$I_{(OHmax)}$ = –2 mA (2)	3 V	V_{CC} – 0.25	V_{CC}	
		$I_{(OHmax)}$ = –6 mA (3)		V_{CC} – 0.60	V_{CC}	
V_{OL}	Low-level output voltage	$I_{(OLmax)}$ = 1 mA (2)	1.8 V	V_{SS}	V_{SS} + 0.25	V
		$I_{(OLmax)}$ = 3 mA (3)		V_{SS}	V_{SS} + 0.60	
		$I_{(OLmax)}$ = 2 mA (2)	3 V	V_{SS}	V_{SS} + 0.25	
		$I_{(OLmax)}$ = 6 mA (3)		V_{SS}	V_{SS} + 0.60	

(1) Selecting reduced drive strength may reduce EMI.
(2) The maximum total current, $I_{(OHmax)}$ and $I_{(OLmax)}$, for all outputs combined, should not exceed ±48 mA to hold the maximum voltage drop specified.
(3) The maximum total current, $I_{(OHmax)}$ and $I_{(OLmax)}$, for all outputs combined, should not exceed ±100 mA to hold the maximum voltage drop specified.

Output Frequency – General Purpose I/O

over recommended ranges of supply voltage and operating free-air temperature (unless otherwise noted)

PARAMETER		TEST CONDITIONS		MIN	MAX	UNIT
$f_{Px.y}$	Port output frequency (with load)	P1.6/SMCLK (1) (2)	V_{CC} = 1.8 V PMMCOREVx = 0		16	MHz
			V_{CC} = 3 V PMMCOREVx = 3		25	
f_{Port_CLK}	Clock output frequency	P1.0/TA0CLK/ACLK P1.6/SMCLK P2.0/TA1CLK/MCLK C_L = 20 pF (2)	V_{CC} = 1.8 V PMMCOREVx = 0		16	MHz
			V_{CC} = 3 V PMMCOREVx = 3		25	

(1) A resistive divider with 2 × R1 between V_{CC} and V_{SS} is used as load. The output is connected to the center tap of the divider. For full drive strength, R1 = 550 Ω. For reduced drive strength, R1 = 1.6 kΩ. C_L = 20 pF is connected to the output to V_{SS}.
(2) The output voltage reaches at least 10% and 90% V_{CC} at the specified toggle frequency.

Copyright © 2010–2013, Texas Instruments Incorporated

Typical Characteristics – Outputs, Reduced Drive Strength (PxDS.y = 0)

over recommended ranges of supply voltage and operating free-air temperature (unless otherwise noted)

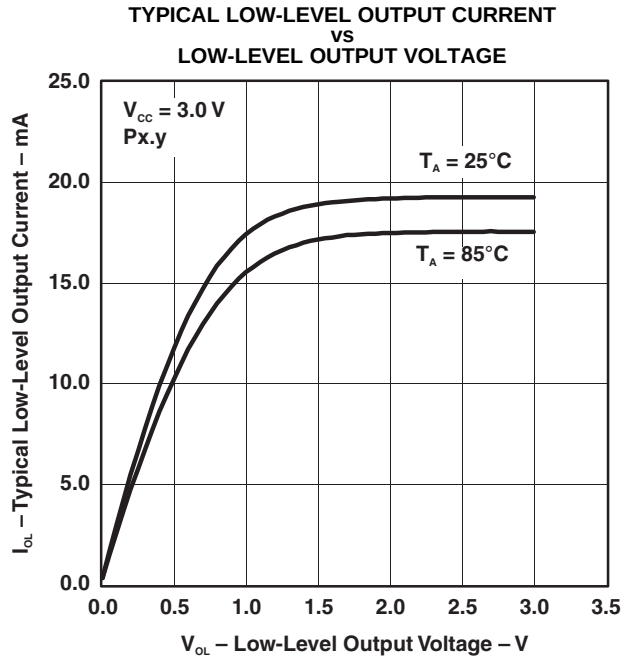

Figure 3.

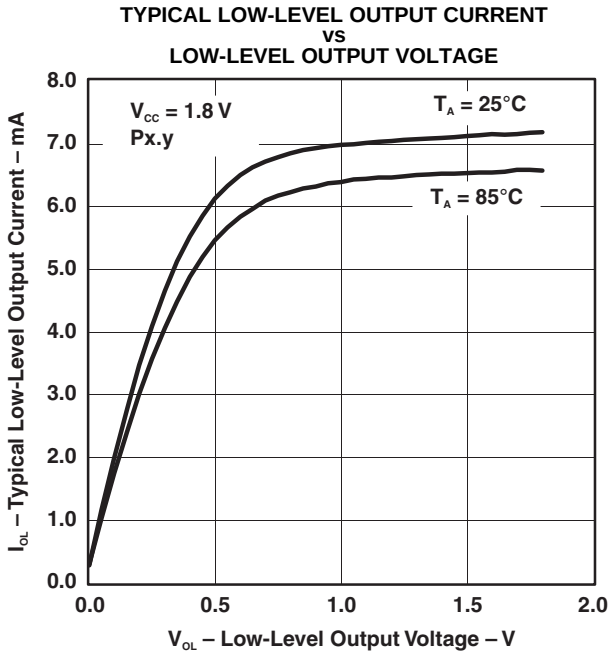

Figure 4.

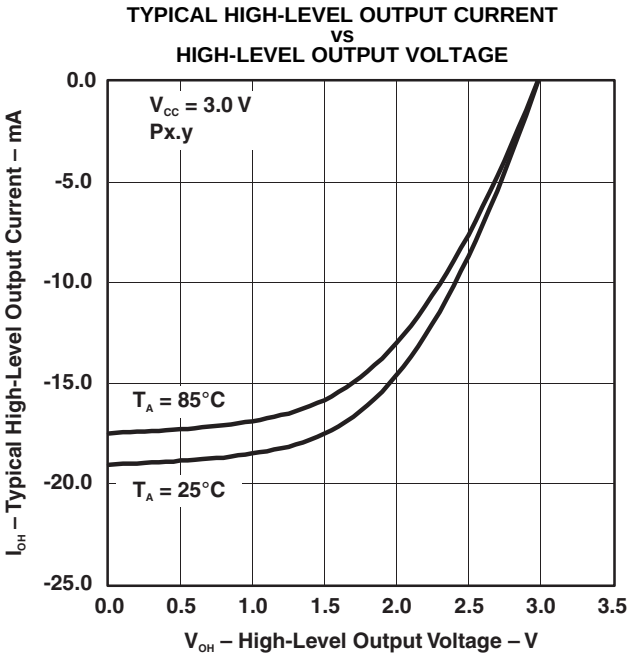

Figure 5.

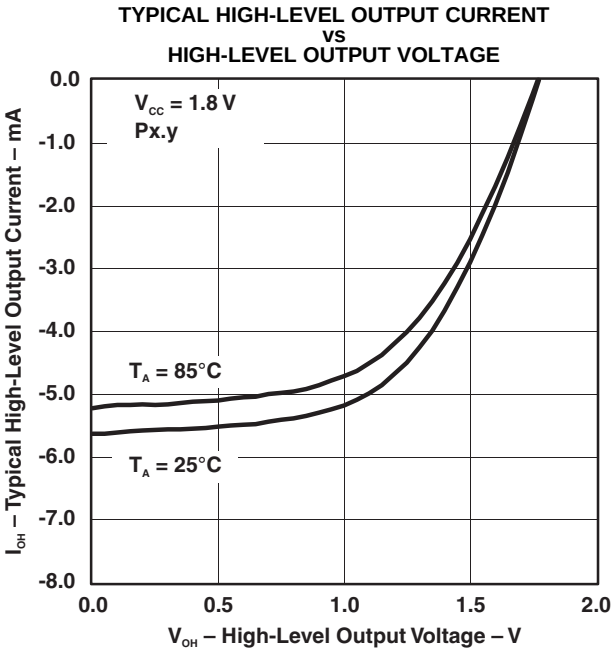

Figure 6.

Copyright © 2010–2013, Texas Instruments Incorporated

Typical Characteristics – Outputs, Full Drive Strength (PxDS.y = 1)

over recommended ranges of supply voltage and operating free-air temperature (unless otherwise noted)

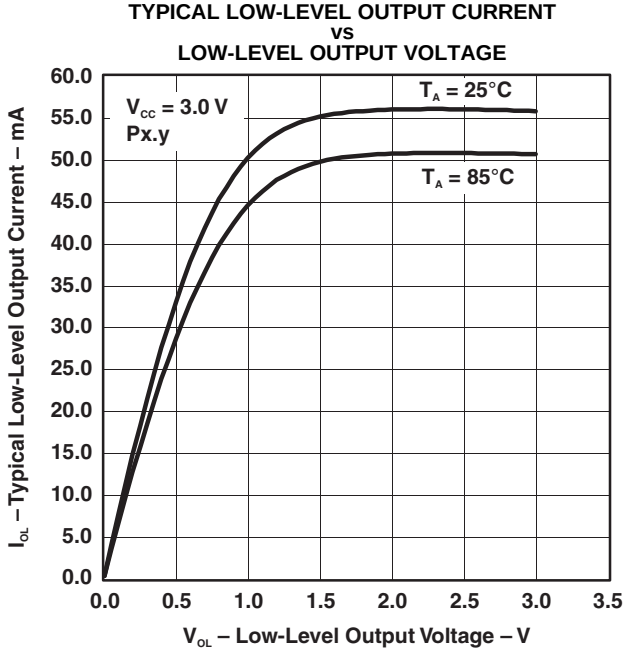

Figure 7.

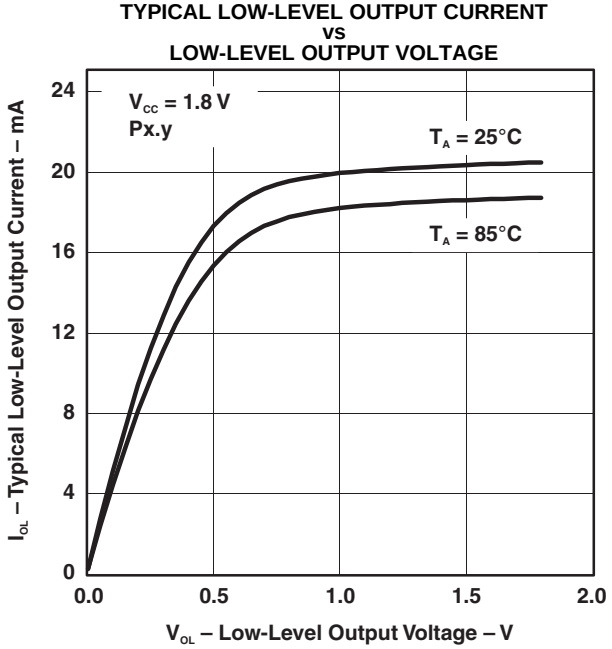

Figure 8.

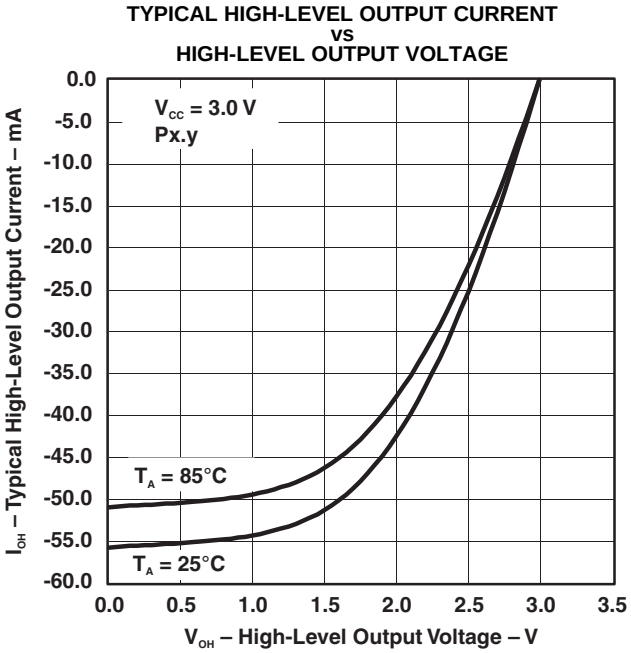

Figure 9.

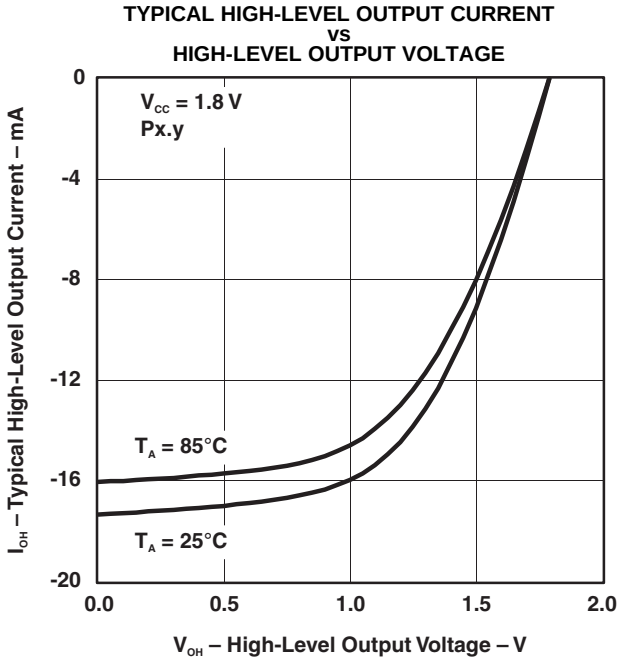

Figure 10.

Crystal Oscillator, XT1, Low-Frequency Mode[1]

over recommended ranges of supply voltage and operating free-air temperature (unless otherwise noted)

PARAMETER		TEST CONDITIONS	V_{CC}	MIN	TYP	MAX	UNIT
$\Delta I_{DVCC.LF}$	Differential XT1 oscillator crystal current consumption from lowest drive setting, LF mode	f_{OSC} = 32768 Hz, XTS = 0, XT1BYPASS = 0, XT1DRIVEx = 1, T_A = 25°C	3 V		0.075		µA
		f_{OSC} = 32768 Hz, XTS = 0, XT1BYPASS = 0, XT1DRIVEx = 2, T_A = 25°C			0.170		
		f_{OSC} = 32768 Hz, XTS = 0, XT1BYPASS = 0, XT1DRIVEx = 3, T_A = 25°C			0.290		
$f_{XT1,LF0}$	XT1 oscillator crystal frequency, LF mode	XTS = 0, XT1BYPASS = 0			32768		Hz
$f_{XT1,LF,SW}$	XT1 oscillator logic-level square-wave input frequency, LF mode	XTS = 0, XT1BYPASS = 1[2] [3]		10	32.768	50	kHz
OA_{LF}	Oscillation allowance for LF crystals[4]	XTS = 0, XT1BYPASS = 0, XT1DRIVEx = 0, $f_{XT1,LF}$ = 32768 Hz, $C_{L,eff}$ = 6 pF			210		kΩ
		XTS = 0, XT1BYPASS = 0, XT1DRIVEx = 1, $f_{XT1,LF}$ = 32768 Hz, $C_{L,eff}$ = 12 pF			300		
$C_{L,eff}$	Integrated effective load capacitance, LF mode[5]	XTS = 0, XCAPx = 0[6]			2		pF
		XTS = 0, XCAPx = 1			5.5		
		XTS = 0, XCAPx = 2			8.5		
		XTS = 0, XCAPx = 3			12.0		
	Duty cycle, LF mode	XTS = 0, Measured at ACLK, $f_{XT1,LF}$ = 32768 Hz		30		70	%
$f_{Fault,LF}$	Oscillator fault frequency, LF mode[7]	XTS = 0[8]		10		10000	Hz
$t_{START,LF}$	Startup time, LF mode	f_{OSC} = 32768 Hz, XTS = 0, XT1BYPASS = 0, XT1DRIVEx = 0, T_A = 25°C, $C_{L,eff}$ = 6 pF	3 V		1000		ms
		f_{OSC} = 32768 Hz, XTS = 0, XT1BYPASS = 0, XT1DRIVEx = 3, T_A = 25°C, $C_{L,eff}$ = 12 pF			500		

(1) To improve EMI on the XT1 oscillator, the following guidelines should be observed.
(a) Keep the trace between the device and the crystal as short as possible.
(b) Design a good ground plane around the oscillator pins.
(c) Prevent crosstalk from other clock or data lines into oscillator pins XIN and XOUT.
(d) Avoid running PCB traces underneath or adjacent to the XIN and XOUT pins.
(e) Use assembly materials and techniques that avoid any parasitic load on the oscillator XIN and XOUT pins.
(f) If conformal coating is used, make sure that it does not induce capacitive or resistive leakage between the oscillator pins.
(2) When XT1BYPASS is set, XT1 circuits are automatically powered down. The input signal must be a digital square wave with the parametrics defined in the Schmitt-Trigger Inputs section.
(3) Maximum frequency of operation of the entire device cannot be exceeded.
(4) Oscillation allowance is based on a safety factor of 5 for recommended crystals. The oscillation allowance is a function of the XT1DRIVEx settings and the effective load. In general, comparable oscillator allowance can be achieved based on the following guidelines, but should be evaluated based on the actual crystal selected for the application:
(a) For XT1DRIVEx = 0, $C_{L,eff} \le 6$ pF.
(b) For XT1DRIVEx = 1, 6 pF $\le C_{L,eff} \le$ 9 pF.
(c) For XT1DRIVEx = 2, 6 pF $\le C_{L,eff} \le$ 10 pF.
(d) For XT1DRIVEx = 3, $C_{L,eff} \ge 6$ pF.
(5) Includes parasitic bond and package capacitance (approximately 2 pF per pin).
Because the PCB adds additional capacitance, it is recommended to verify the correct load by measuring the ACLK frequency. For a correct setup, the effective load capacitance should always match the specification of the used crystal.
(6) Requires external capacitors at both terminals. Values are specified by crystal manufacturers.
(7) Frequencies below the MIN specification set the fault flag. Frequencies above the MAX specification do not set the fault flag. Frequencies between the MIN and MAX might set the flag.
(8) Measured with logic-level input frequency but also applies to operation with crystals.

Copyright © 2010–2013, Texas Instruments Incorporated

Crystal Oscillator, XT1, High-Frequency Mode[1]

over recommended ranges of supply voltage and operating free-air temperature (unless otherwise noted)

PARAMETER		TEST CONDITIONS	V_{CC}	MIN	TYP	MAX	UNIT
$I_{DVCC.HF}$	XT1 oscillator crystal current, HF mode	f_{OSC} = 4 MHz, XTS = 1, XOSCOFF = 0, XT1BYPASS = 0, XT1DRIVEx = 0, T_A = 25°C	3 V		200		µA
		f_{OSC} = 12 MHz, XTS = 1, XOSCOFF = 0, XT1BYPASS = 0, XT1DRIVEx = 1, T_A = 25°C			260		
		f_{OSC} = 20 MHz, XTS = 1, XOSCOFF = 0, XT1BYPASS = 0, XT1DRIVEx = 2, T_A = 25°C			325		
		f_{OSC} = 32 MHz, XTS = 1, XOSCOFF = 0, XT1BYPASS = 0, XT1DRIVEx = 3, T_A = 25°C			450		
$f_{XT1,HF0}$	XT1 oscillator crystal frequency, HF mode 0	XTS = 1, XT1BYPASS = 0, XT1DRIVEx = 0[2]		4		8	MHz
$f_{XT1,HF1}$	XT1 oscillator crystal frequency, HF mode 1	XTS = 1, XT1BYPASS = 0, XT1DRIVEx = 1[2]		8		16	MHz
$f_{XT1,HF2}$	XT1 oscillator crystal frequency, HF mode 2	XTS = 1, XT1BYPASS = 0, XT1DRIVEx = 2[2]		16		24	MHz
$f_{XT1,HF3}$	XT1 oscillator crystal frequency, HF mode 3	XTS = 1, XT1BYPASS = 0, XT1DRIVEx = 3[2]		24		32	MHz
$f_{XT1,HF,SW}$	XT1 oscillator logic-level square-wave input frequency, HF mode, bypass mode	XTS = 1, XT1BYPASS = 1[3] [2]		1.5		32	MHz
OA_{HF}	Oscillation allowance for HF crystals[4]	XTS = 1, XT1BYPASS = 0, XT1DRIVEx = 0, $f_{XT1,HF}$ = 6 MHz, $C_{L,eff}$ = 15 pF			450		Ω
		XTS = 1, XT1BYPASS = 0, XT1DRIVEx = 1, $f_{XT1,HF}$ = 12 MHz, $C_{L,eff}$ = 15 pF			320		
		XTS = 1, XT1BYPASS = 0, XT1DRIVEx = 2, $f_{XT1,HF}$ = 20 MHz, $C_{L,eff}$ = 15 pF			200		
		XTS = 1, XT1BYPASS = 0, XT1DRIVEx = 3, $f_{XT1,HF}$ = 32 MHz, $C_{L,eff}$ = 15 pF			200		
$t_{START,HF}$	Startup time, HF mode	f_{OSC} = 6 MHz, XTS = 1, XT1BYPASS = 0, XT1DRIVEx = 0, T_A = 25°C, $C_{L,eff}$ = 15 pF	3 V		0.5		ms
		f_{OSC} = 20 MHz, XTS = 1, XT1BYPASS = 0, XT1DRIVEx = 2, T_A = 25°C, $C_{L,eff}$ = 15 pF			0.3		

(1) To improve EMI on the XT1 oscillator the following guidelines should be observed.
(a) Keep the traces between the device and the crystal as short as possible.
(b) Design a good ground plane around the oscillator pins.
(c) Prevent crosstalk from other clock or data lines into oscillator pins XIN and XOUT.
(d) Avoid running PCB traces underneath or adjacent to the XIN and XOUT pins.
(e) Use assembly materials and techniques that avoid any parasitic load on the oscillator XIN and XOUT pins.
(f) If conformal coating is used, make sure that it does not induce capacitive or resistive leakage between the oscillator pins.
(2) This represents the maximum frequency that can be input to the device externally. Maximum frequency achievable on the device operation is based on the frequencies present on ACLK, MCLK, and SMCLK cannot be exceed for a given range of operation.
(3) When XT1BYPASS is set, XT1 circuits are automatically powered down. The input signal must be a digital square wave with the parametrics defined in the Schmitt-Trigger Inputs section.
(4) Oscillation allowance is based on a safety factor of 5 for recommended crystals.

Copyright © 2010–2013, Texas Instruments Incorporated

Crystal Oscillator, XT1, High-Frequency Mode[1] (continued)

over recommended ranges of supply voltage and operating free-air temperature (unless otherwise noted)

PARAMETER		TEST CONDITIONS	V_{CC}	MIN	TYP	MAX	UNIT
$C_{L,eff}$	Integrated effective load capacitance, HF mode[5] [6]	XTS = 1			1		pF
	Duty cycle, HF mode	XTS = 1, Measured at ACLK, $f_{XT1,HF2}$ = 20 MHz		40	50	60	%
$f_{Fault,HF}$	Oscillator fault frequency, HF mode[7]	XTS = 1[8]		30		300	kHz

(5) Includes parasitic bond and package capacitance (approximately 2 pF per pin).
Because the PCB adds additional capacitance, it is recommended to verify the correct load by measuring the ACLK frequency. For a correct setup, the effective load capacitance should always match the specification of the used crystal.
(6) Requires external capacitors at both terminals. Values are specified by crystal manufacturers.
(7) Frequencies below the MIN specification set the fault flag. Frequencies above the MAX specification do not set the fault flag. Frequencies between the MIN and MAX might set the flag.
(8) Measured with logic-level input frequency but also applies to operation with crystals.

Crystal Oscillator, XT2

over recommended ranges of supply voltage and operating free-air temperature (unless otherwise noted)[1] [2]

PARAMETER		TEST CONDITIONS	V_{CC}	MIN	TYP	MAX	UNIT
$I_{DVCC.XT2}$	XT2 oscillator crystal current consumption	f_{OSC} = 4 MHz, XT2OFF = 0, XT2BYPASS = 0, XT2DRIVEx = 0, T_A = 25°C	3 V		200		µA
		f_{OSC} = 12 MHz, XT2OFF = 0, XT2BYPASS = 0, XT2DRIVEx = 1, T_A = 25°C			260		
		f_{OSC} = 20 MHz, XT2OFF = 0, XT2BYPASS = 0, XT2DRIVEx = 2, T_A = 25°C			325		
		f_{OSC} = 32 MHz, XT2OFF = 0, XT2BYPASS = 0, XT2DRIVEx = 3, T_A = 25°C			450		
$f_{XT2,HF0}$	XT2 oscillator crystal frequency, mode 0	XT2DRIVEx = 0, XT2BYPASS = 0[3]		4		8	MHz
$f_{XT2,HF1}$	XT2 oscillator crystal frequency, mode 1	XT2DRIVEx = 1, XT2BYPASS = 0[3]		8		16	MHz
$f_{XT2,HF2}$	XT2 oscillator crystal frequency, mode 2	XT2DRIVEx = 2, XT2BYPASS = 0[3]		16		24	MHz
$f_{XT2,HF3}$	XT2 oscillator crystal frequency, mode 3	XT2DRIVEx = 3, XT2BYPASS = 0[3]		24		32	MHz
$f_{XT2,HF,SW}$	XT2 oscillator logic-level square-wave input frequency, bypass mode	XT2BYPASS = 1[4] [3]		1.5		32	MHz

(1) Requires external capacitors at both terminals. Values are specified by crystal manufacturers.
(2) To improve EMI on the XT2 oscillator the following guidelines should be observed.
(a) Keep the traces between the device and the crystal as short as possible.
(b) Design a good ground plane around the oscillator pins.
(c) Prevent crosstalk from other clock or data lines into oscillator pins XT2IN and XT2OUT.
(d) Avoid running PCB traces underneath or adjacent to the XT2IN and XT2OUT pins.
(e) Use assembly materials and techniques that avoid any parasitic load on the oscillator XT2IN and XT2OUT pins.
(f) If conformal coating is used, make sure that it does not induce capacitive or resistive leakage between the oscillator pins.
(3) This represents the maximum frequency that can be input to the device externally. Maximum frequency achievable on the device operation is based on the frequencies present on ACLK, MCLK, and SMCLK cannot be exceed for a given range of operation.
(4) When XT2BYPASS is set, XT2 circuits are automatically powered down. The input signal must be a digital square wave with the parametrics defined in the Schmitt-Trigger Inputs section.

Copyright © 2010–2013, Texas Instruments Incorporated

Crystal Oscillator, XT2 (continued)

over recommended ranges of supply voltage and operating free-air temperature (unless otherwise noted)[1] [2]

PARAMETER		TEST CONDITIONS	V_{CC}	MIN	TYP	MAX	UNIT
OA_{HF}	Oscillation allowance for HF crystals[5]	XT2DRIVEx = 0, XT2BYPASS = 0, $f_{XT2,HF0}$ = 6 MHz, $C_{L,eff}$ = 15 pF			450		Ω
		XT2DRIVEx = 1, XT2BYPASS = 0, $f_{XT2,HF1}$ = 12 MHz, $C_{L,eff}$ = 15 pF			320		
		XT2DRIVEx = 2, XT2BYPASS = 0, $f_{XT2,HF2}$ = 20 MHz, $C_{L,eff}$ = 15 pF			200		
		XT2DRIVEx = 3, XT2BYPASS = 0, $f_{XT2,HF3}$ = 32 MHz, $C_{L,eff}$ = 15 pF			200		
$t_{START,HF}$	Startup time	f_{OSC} = 6 MHz XT2BYPASS = 0, XT2DRIVEx = 0, T_A = 25°C, $C_{L,eff}$ = 15 pF	3 V		0.5		ms
		f_{OSC} = 20 MHz XT2BYPASS = 0, XT2DRIVEx = 2, T_A = 25°C, $C_{L,eff}$ = 15 pF			0.3		
$C_{L,eff}$	Integrated effective load capacitance, HF mode[6] [1]				1		pF
	Duty cycle	Measured at ACLK, $f_{XT2,HF2}$ = 20 MHz		40	50	60	%
$f_{Fault,HF}$	Oscillator fault frequency[7]	XT2BYPASS = 1[8]		30		300	kHz

(5) Oscillation allowance is based on a safety factor of 5 for recommended crystals.
(6) Includes parasitic bond and package capacitance (approximately 2 pF per pin).
Because the PCB adds additional capacitance, it is recommended to verify the correct load by measuring the ACLK frequency. For a correct setup, the effective load capacitance should always match the specification of the used crystal.
(7) Frequencies below the MIN specification set the fault flag. Frequencies above the MAX specification do not set the fault flag. Frequencies between the MIN and MAX might set the flag.
(8) Measured with logic-level input frequency but also applies to operation with crystals.

Internal Very-Low-Power Low-Frequency Oscillator (VLO)

over recommended ranges of supply voltage and operating free-air temperature (unless otherwise noted)

PARAMETER		TEST CONDITIONS	V_{CC}	MIN	TYP	MAX	UNIT
f_{VLO}	VLO frequency	Measured at ACLK	1.8 V to 3.6 V	6	9.4	14	kHz
df_{VLO}/d_T	VLO frequency temperature drift	Measured at ACLK[1]	1.8 V to 3.6 V		0.5		%/°C
df_{VLO}/dV_{CC}	VLO frequency supply voltage drift	Measured at ACLK[2]	1.8 V to 3.6 V		4		%/V
	Duty cycle	Measured at ACLK	1.8 V to 3.6 V	40	50	60	%

(1) Calculated using the box method: (MAX(-40 to 85°C) – MIN(-40 to 85°C)) / MIN(-40 to 85°C) / (85°C – (–40°C))
(2) Calculated using the box method: (MAX(1.8 to 3.6 V) – MIN(1.8 to 3.6 V)) / MIN(1.8 to 3.6 V) / (3.6 V – 1.8 V)

Internal Reference, Low-Frequency Oscillator (REFO)

over recommended ranges of supply voltage and operating free-air temperature (unless otherwise noted)

PARAMETER		TEST CONDITIONS	V_{CC}	MIN	TYP	MAX	UNIT
I_{REFO}	REFO oscillator current consumption	T_A = 25°C	1.8 V to 3.6 V		3		µA
f_{REFO}	REFO frequency calibrated	Measured at ACLK	1.8 V to 3.6 V		32768		Hz
	REFO absolute tolerance calibrated	Full temperature range	1.8 V to 3.6 V			±3.5	%
		T_A = 25°C	3 V			±1.5	
df_{REFO}/d_T	REFO frequency temperature drift	Measured at ACLK[1]	1.8 V to 3.6 V		0.01		%/°C
df_{REFO}/dV_{CC}	REFO frequency supply voltage drift	Measured at ACLK[2]	1.8 V to 3.6 V		1.0		%/V
	Duty cycle	Measured at ACLK	1.8 V to 3.6 V	40	50	60	%
t_{START}	REFO startup time	40%/60% duty cycle	1.8 V to 3.6 V		25		µs

(1) Calculated using the box method: (MAX(-40 to 85°C) – MIN(-40 to 85°C)) / MIN(-40 to 85°C) / (85°C – (–40°C))
(2) Calculated using the box method: (MAX(1.8 to 3.6 V) – MIN(1.8 to 3.6 V)) / MIN(1.8 to 3.6 V) / (3.6 V – 1.8 V)

Copyright © 2010–2013, Texas Instruments Incorporated

DCO Frequency

over recommended ranges of supply voltage and operating free-air temperature (unless otherwise noted)

PARAMETER		TEST CONDITIONS	MIN	TYP	MAX	UNIT
$f_{DCO(0,0)}$	DCO frequency (0, 0)(1)	DCORSELx = 0, DCOx = 0, MODx = 0	0.07		0.20	MHz
$f_{DCO(0,31)}$	DCO frequency (0, 31)(1)	DCORSELx = 0, DCOx = 31, MODx = 0	0.70		1.70	MHz
$f_{DCO(1,0)}$	DCO frequency (1, 0)(1)	DCORSELx = 1, DCOx = 0, MODx = 0	0.15		0.36	MHz
$f_{DCO(1,31)}$	DCO frequency (1, 31)(1)	DCORSELx = 1, DCOx = 31, MODx = 0	1.47		3.45	MHz
$f_{DCO(2,0)}$	DCO frequency (2, 0)(1)	DCORSELx = 2, DCOx = 0, MODx = 0	0.32		0.75	MHz
$f_{DCO(2,31)}$	DCO frequency (2, 31)(1)	DCORSELx = 2, DCOx = 31, MODx = 0	3.17		7.38	MHz
$f_{DCO(3,0)}$	DCO frequency (3, 0)(1)	DCORSELx = 3, DCOx = 0, MODx = 0	0.64		1.51	MHz
$f_{DCO(3,31)}$	DCO frequency (3, 31)(1)	DCORSELx = 3, DCOx = 31, MODx = 0	6.07		14.0	MHz
$f_{DCO(4,0)}$	DCO frequency (4, 0)(1)	DCORSELx = 4, DCOx = 0, MODx = 0	1.3		3.2	MHz
$f_{DCO(4,31)}$	DCO frequency (4, 31)(1)	DCORSELx = 4, DCOx = 31, MODx = 0	12.3		28.2	MHz
$f_{DCO(5,0)}$	DCO frequency (5, 0)(1)	DCORSELx = 5, DCOx = 0, MODx = 0	2.5		6.0	MHz
$f_{DCO(5,31)}$	DCO frequency (5, 31)(1)	DCORSELx = 5, DCOx = 31, MODx = 0	23.7		54.1	MHz
$f_{DCO(6,0)}$	DCO frequency (6, 0)(1)	DCORSELx = 6, DCOx = 0, MODx = 0	4.6		10.7	MHz
$f_{DCO(6,31)}$	DCO frequency (6, 31)(1)	DCORSELx = 6, DCOx = 31, MODx = 0	39.0		88.0	MHz
$f_{DCO(7,0)}$	DCO frequency (7, 0)(1)	DCORSELx = 7, DCOx = 0, MODx = 0	8.5		19.6	MHz
$f_{DCO(7,31)}$	DCO frequency (7, 31)(1)	DCORSELx = 7, DCOx = 31, MODx = 0	60		135	MHz
$S_{DCORSEL}$	Frequency step between range DCORSEL and DCORSEL + 1	$S_{RSEL} = f_{DCO(DCORSEL+1,DCO)}/f_{DCO(DCORSEL,DCO)}$	1.2		2.3	ratio
S_{DCO}	Frequency step between tap DCO and DCO + 1	$S_{DCO} = f_{DCO(DCORSEL,DCO+1)}/f_{DCO(DCORSEL,DCO)}$	1.02		1.12	ratio
	Duty cycle	Measured at SMCLK	40	50	60	%
df_{DCO}/dT	DCO frequency temperature drift(2)	f_{DCO} = 1 MHz		0.1		%/°C
df_{DCO}/dV_{CC}	DCO frequency voltage drift(3)	f_{DCO} = 1 MHz		1.9		%/V

(1) When selecting the proper DCO frequency range (DCORSELx), the target DCO frequency, f_{DCO}, should be set to reside within the range of $f_{DCO(n,\ 0),MAX} \le f_{DCO} \le f_{DCO(n,\ 31),MIN}$, where $f_{DCO(n,\ 0),MAX}$ represents the maximum frequency specified for the DCO frequency, range n, tap 0 (DCOx = 0) and $f_{DCO(n,31),MIN}$ represents the minimum frequency specified for the DCO frequency, range n, tap 31 (DCOx = 31). This ensures that the target DCO frequency resides within the range selected. It should also be noted that if the actual f_{DCO} frequency for the selected range causes the FLL or the application to select tap 0 or 31, the DCO fault flag is set to report that the selected range is at its minimum or maximum tap setting.
(2) Calculated using the box method: (MAX(-40 to 85°C) – MIN(-40 to 85°C)) / MIN(-40 to 85°C) / (85°C – (–40°C))
(3) Calculated using the box method: (MAX(1.8 to 3.6 V) – MIN(1.8 to 3.6 V)) / MIN(1.8 to 3.6 V) / (3.6 V – 1.8 V)

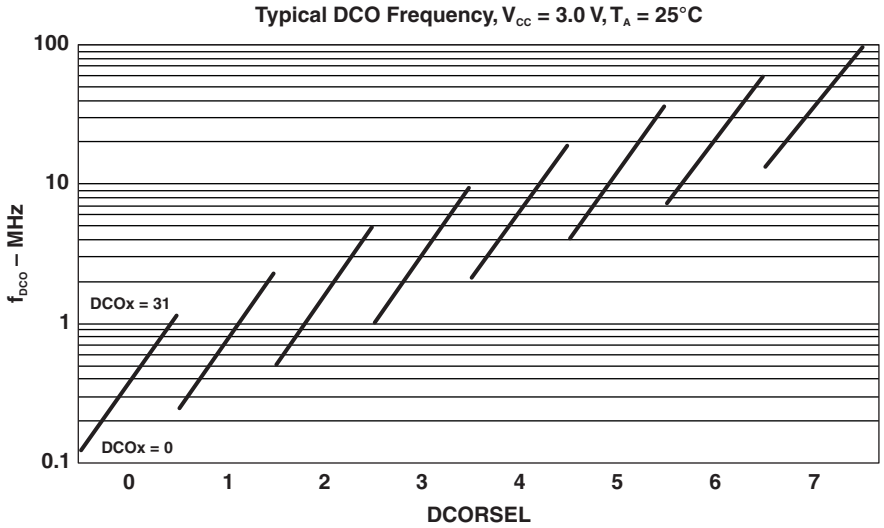

Figure 11. Typical DCO frequency

Copyright © 2010–2013, Texas Instruments Incorporated

PMM, Brown-Out Reset (BOR)

over recommended ranges of supply voltage and operating free-air temperature (unless otherwise noted)

PARAMETER		TEST CONDITIONS	MIN	TYP	MAX	UNIT
$V(DV_{CC}_BOR_IT–)$	BOR_H on voltage, DV_{CC} falling level	$\lvert dDV_{CC}/d_t \rvert < 3$ V/s			1.45	V
$V(DV_{CC}_BOR_IT+)$	BOR_H off voltage, DV_{CC} rising level	$\lvert dDV_{CC}/d_t \rvert < 3$ V/s	0.80	1.30	1.50	V
$V(DV_{CC}_BOR_hys)$	BOR_H hysteresis		60		250	mV
t_{RESET}	Pulse duration required at $\overline{RST}$/NMI pin to accept a reset		2			µs

PMM, Core Voltage

over recommended ranges of supply voltage and operating free-air temperature (unless otherwise noted)

PARAMETER		TEST CONDITIONS	MIN	TYP	MAX	UNIT
$V_{CORE3}(AM)$	Core voltage, active mode, PMMCOREV = 3	2.4 V ≤ DV_{CC} ≤ 3.6 V		1.90		V
$V_{CORE2}(AM)$	Core voltage, active mode, PMMCOREV = 2	2.2 V ≤ DV_{CC} ≤ 3.6 V		1.80		V
$V_{CORE1}(AM)$	Core voltage, active mode, PMMCOREV = 1	2.0 V ≤ DV_{CC} ≤ 3.6 V		1.60		V
$V_{CORE0}(AM)$	Core voltage, active mode, PMMCOREV = 0	1.8 V ≤ DV_{CC} ≤ 3.6 V		1.40		V
$V_{CORE3}(LPM)$	Core voltage, low-current mode, PMMCOREV = 3	2.4 V ≤ DV_{CC} ≤ 3.6 V		1.94		V
$V_{CORE2}(LPM)$	Core voltage, low-current mode, PMMCOREV = 2	2.2 V ≤ DV_{CC} ≤ 3.6 V		1.84		V
$V_{CORE1}(LPM)$	Core voltage, low-current mode, PMMCOREV = 1	2.0 V ≤ DV_{CC} ≤ 3.6 V		1.64		V
$V_{CORE0}(LPM)$	Core voltage, low-current mode, PMMCOREV = 0	1.8 V ≤ DV_{CC} ≤ 3.6 V		1.44		V

Copyright © 2010–2013, Texas Instruments Incorporated

PMM, SVS High Side

over recommended ranges of supply voltage and operating free-air temperature (unless otherwise noted)

PARAMETER		TEST CONDITIONS	MIN	TYP	MAX	UNIT
$I_{(SVSH)}$	SVS current consumption	SVSHE = 0, DV_{CC} = 3.6 V		0		nA
		SVSHE = 1, DV_{CC} = 3.6 V, SVSHFP = 0		200		nA
		SVSHE = 1, DV_{CC} = 3.6 V, SVSHFP = 1		1.5		µA
$V_{(SVSH_IT-)}$	SVS_H on voltage level(1)	SVSHE = 1, SVSHRVL = 0	1.57	1.68	1.78	V
		SVSHE = 1, SVSHRVL = 1	1.79	1.88	1.98	
		SVSHE = 1, SVSHRVL = 2	1.98	2.08	2.21	
		SVSHE = 1, SVSHRVL = 3	2.10	2.18	2.31	
$V_{(SVSH_IT+)}$	SVS_H off voltage level(1)	SVSHE = 1, SVSMHRRL = 0	1.62	1.74	1.85	V
		SVSHE = 1, SVSMHRRL = 1	1.88	1.94	2.07	
		SVSHE = 1, SVSMHRRL = 2	2.07	2.14	2.28	
		SVSHE = 1, SVSMHRRL = 3	2.20	2.30	2.42	
		SVSHE = 1, SVSMHRRL = 4	2.32	2.40	2.55	
		SVSHE = 1, SVSMHRRL = 5	2.52	2.70	2.88	
		SVSHE = 1, SVSMHRRL = 6	2.90	3.10	3.23	
		SVSHE = 1, SVSMHRRL = 7	2.90	3.10	3.23	
$t_{pd(SVSH)}$	SVS_H propagation delay	SVSHE = 1, dV_{DVCC}/dt = 10 mV/µs, SVSHFP = 1		2.5		µs
		SVSHE = 1, dV_{DVCC}/dt = 1 mV/µs, SVSHFP = 0		20		
$t_{(SVSH)}$	SVS_H on or off delay time	SVSHE = 0 → 1, dV_{DVCC}/dt = 10 mV/µs, SVSHFP = 1		12.5		µs
		SVSHE = 0 → 1, dV_{DVCC}/dt = 1 mV/µs, SVSHFP = 0		100		
dV_{DVCC}/dt	DV_{CC} rise time		0		1000	V/s

(1) The SVS_H settings available depend on the VCORE (PMMCOREVx) setting. See the *Power Management Module and Supply Voltage Supervisor* chapter in the *MSP430x5xx and MSP430x6xx Family User's Guide* (SLAU208) on recommended settings and use.

Copyright © 2010–2013, Texas Instruments Incorporated

PMM, SVM High Side

over recommended ranges of supply voltage and operating free-air temperature (unless otherwise noted)

PARAMETER		TEST CONDITIONS	MIN	TYP	MAX	UNIT
$I_{(SVMH)}$	SVM_H current consumption	SVMHE = 0, DV_{CC} = 3.6 V		0		nA
		SVMHE= 1, DV_{CC} = 3.6 V, SVMHFP = 0		200		nA
		SVMHE = 1, DV_{CC} = 3.6 V, SVMHFP = 1		1.5		µA
$V_{(SVMH)}$	SVM_H on or off voltage level (1)	SVMHE = 1, SVSMHRRL = 0	1.62	1.74	1.85	V
		SVMHE = 1, SVSMHRRL = 1	1.88	1.94	2.07	
		SVMHE = 1, SVSMHRRL = 2	2.07	2.14	2.28	
		SVMHE = 1, SVSMHRRL = 3	2.20	2.30	2.42	
		SVMHE = 1, SVSMHRRL = 4	2.32	2.40	2.55	
		SVMHE = 1, SVSMHRRL = 5	2.52	2.70	2.88	
		SVMHE = 1, SVSMHRRL = 6	2.90	3.10	3.23	
		SVMHE = 1, SVSMHRRL = 7	2.90	3.10	3.23	
		SVMHE = 1, SVMHOVPE = 1		3.75		
$t_{pd(SVMH)}$	SVM_H propagation delay	SVMHE = 1, dV_{DVCC}/dt = 10 mV/µs, SVMHFP = 1		2.5		µs
		SVMHE = 1, dV_{DVCC}/dt = 1 mV/µs, SVMHFP = 0		20		
$t_{(SVMH)}$	SVM_H on or off delay time	SVMHE = 0 → 1, dV_{DVCC}/dt = 10 mV/µs, SVMHFP = 1		12.5		µs
		SVMHE = 0 → 1, dV_{DVCC}/dt = 1 mV/µs, SVMHFP = 0		100		

(1) The SVM_H settings available depend on the VCORE (PMMCOREVx) setting. See the *Power Management Module and Supply Voltage Supervisor* chapter in the *MSP430x5xx and MSP430x6xx Family User's Guide* (SLAU208) on recommended settings and use.

PMM, SVS Low Side

over recommended ranges of supply voltage and operating free-air temperature (unless otherwise noted)

PARAMETER		TEST CONDITIONS	MIN	TYP	MAX	UNIT
$I_{(SVSL)}$	SVS_L current consumption	SVSLE = 0, PMMCOREV = 2		0		nA
		SVSLE = 1, PMMCOREV = 2, SVSLFP = 0		200		nA
		SVSLE = 1, PMMCOREV = 2, SVSLFP = 1		1.5		µA
$t_{pd(SVSL)}$	SVS_L propagation delay	SVSLE = 1, dV_{CORE}/dt = 10 mV/µs, SVSLFP = 1		2.5		µs
		SVSLE = 1, dV_{CORE}/dt = 1 mV/µs, SVSLFP = 0		20		
$t_{(SVSL)}$	SVS_L on or off delay time	SVSLE = 0 → 1, dV_{CORE}/dt = 10 mV/µs, SVSLFP = 1		12.5		µs
		SVSLE = 0 → 1, dV_{CORE}/dt = 1 mV/µs, SVSLFP = 0		100		

PMM, SVM Low Side

over recommended ranges of supply voltage and operating free-air temperature (unless otherwise noted)

PARAMETER		TEST CONDITIONS	MIN	TYP	MAX	UNIT
$I_{(SVML)}$	SVM_L current consumption	SVMLE = 0, PMMCOREV = 2		0		nA
		SVMLE= 1, PMMCOREV = 2, SVMLFP = 0		200		nA
		SVMLE= 1, PMMCOREV = 2, SVMLFP = 1		1.5		µA
$t_{pd(SVML)}$	SVM_L propagation delay	SVMLE = 1, dV_{CORE}/dt = 10 mV/µs, SVMLFP = 1		2.5		µs
		SVMLE = 1, dV_{CORE}/dt = 1 mV/µs, SVMLFP = 0		20		
$t_{(SVML)}$	SVM_L on or off delay time	SVMLE = 0 → 1, dV_{CORE}/dt = 10 mV/µs, SVMLFP = 1		12.5		µs
		SVMLE = 0 → 1, dV_{CORE}/dt = 1 mV/µs, SVMLFP = 0		100		

Wake-Up From Low-Power Modes and Reset

over recommended ranges of supply voltage and operating free-air temperature (unless otherwise noted)

PARAMETER		TEST CONDITIONS		MIN	TYP	MAX	UNIT
$t_{WAKE-UP-FAST}$	Wake-up time from LPM2, LPM3, or LPM4 to active mode(1)	PMMCOREV = SVSMLRRL = n (where n = 0, 1, 2, or 3), SVSLFP = 1	f_{MCLK} ≥ 4.0 MHz			5	µs
			f_{MCLK} < 4.0 MHz			6	
$t_{WAKE-UP-SLOW}$	Wake-up time from LPM2, LPM3 or LPM4 to active mode(2)	PMMCOREV = SVSMLRRL = n (where n = 0, 1, 2, or 3), SVSLFP = 0			150	165	µs
$t_{WAKE-UP-LPM5}$	Wake-up time from LPM4.5 to active mode(3)				2	3	ms
$t_{WAKE-UP-RESET}$	Wake-up time from $\overline{RST}$ or BOR event to active mode(3)				2	3	ms

(1) This value represents the time from the wakeup event to the first active edge of MCLK. The wakeup time depends on the performance mode of the low side supervisor (SVS_L) and low side monitor (SVM_L). Fastest wakeup times are possible with SVS_L and SVM_L in full performance mode or disabled when operating in AM, LPM0, and LPM1. Various options are available for SVS_L and SVM_L while operating in LPM2, LPM3, and LPM4. See the *Power Management Module and Supply Voltage Supervisor* chapter in the *MSP430x5xx and MSP430x6xx Family User's Guide* (SLAU208).

(2) This value represents the time from the wakeup event to the first active edge of MCLK. The wakeup time depends on the performance mode of the low side supervisor (SVS_L) and low side monitor (SVM_L). In this case, the SVS_L and SVM_L are in normal mode (low current) mode when operating in AM, LPM0, and LPM1. Various options are available for SVS_L and SVM_L while operating in LPM2, LPM3, and LPM4. See the *Power Management Module and Supply Voltage Supervisor* chapter in the *MSP430x5xx and MSP430x6xx Family User's Guide* (SLAU208).

(3) This value represents the time from the wakeup event to the reset vector execution.

Copyright © 2010–2013, Texas Instruments Incorporated

Timer_A

over recommended ranges of supply voltage and operating free-air temperature (unless otherwise noted)

PARAMETER		TEST CONDITIONS	V_{CC}	MIN	TYP	MAX	UNIT
f_{TA}	Timer_A input clock frequency	Internal: SMCLK, ACLK External: TACLK Duty cycle = 50% ± 10%	1.8 V, 3 V			25	MHz
$t_{TA,cap}$	Timer_A capture timing	All capture inputs, Minimum pulse duration required for capture	1.8 V, 3 V	20			ns

Timer_B

over recommended ranges of supply voltage and operating free-air temperature (unless otherwise noted)

PARAMETER		TEST CONDITIONS	V_{CC}	MIN	TYP	MAX	UNIT
f_{TB}	Timer_B input clock frequency	Internal: SMCLK, ACLK External: TBCLK Duty cycle = 50% ± 10%	1.8 V, 3 V			25	MHz
$t_{TB,cap}$	Timer_B capture timing	All capture inputs, Minimum pulse duration required for capture	1.8 V, 3 V	20			ns

USCI (UART Mode), Recommended Operating Conditions

PARAMETER		CONDITIONS	V_{CC}	MIN	TYP	MAX	UNIT
f_{USCI}	USCI input clock frequency	Internal: SMCLK, ACLK External: UCLK Duty cycle = 50% ± 10%				f_{SYSTEM}	MHz
f_{BITCLK}	BITCLK clock frequency (equals baud rate in MBaud)					1	MHz

USCI (UART Mode)

over recommended ranges of supply voltage and operating free-air temperature (unless otherwise noted)

PARAMETER		TEST CONDITIONS	V_{CC}	MIN	TYP	MAX	UNIT
t_r	UART receive deglitch time(1)		2.2 V	50		600	ns
			3 V	50		600	

(1) Pulses on the UART receive input (UCxRX) shorter than the UART receive deglitch time are suppressed. To ensure that pulses are correctly recognized, their duration should exceed the maximum specification of the deglitch time.

USCI (SPI Master Mode), Recommended Operating Conditions

PARAMETER		CONDITIONS	V_{CC}	MIN	TYP	MAX	UNIT
f_{USCI}	USCI input clock frequency	Internal: SMCLK, ACLK Duty cycle = 50% ± 10%				f_{SYSTEM}	MHz

USCI (SPI Master Mode)

over recommended ranges of supply voltage and operating free-air temperature (unless otherwise noted)
(see Note (1), Figure 12 and Figure 13)

PARAMETER		TEST CONDITIONS	V_{CC}	MIN	TYP	MAX	UNIT
f_{USCI}	USCI input clock frequency	SMCLK, ACLK Duty cycle = 50% ± 10%				f_{SYSTEM}	MHz
$t_{SU,MI}$	SOMI input data setup time	PMMCOREV = 0	1.8 V	55			ns
			3 V	38			
		PMMCOREV = 3	2.4 V	30			ns
			3 V	25			
$t_{HD,MI}$	SOMI input data hold time	PMMCOREV = 0	1.8 V	0			ns
			3 V	0			
		PMMCOREV = 3	2.4 V	0			ns
			3 V	0			
$t_{VALID,MO}$	SIMO output data valid time (2)	UCLK edge to SIMO valid, C_L = 20 pF, PMMCOREV = 0	1.8 V			20	ns
			3 V			18	
		UCLK edge to SIMO valid, C_L = 20 pF, PMMCOREV = 3	2.4 V			16	ns
			3 V			15	
$t_{HD,MO}$	SIMO output data hold time (3)	C_L = 20 pF, PMMCOREV = 0	1.8 V	-10			ns
			3 V	-8			
		C_L = 20 pF, PMMCOREV = 3	2.4 V	-10			ns
			3 V	-8			

(1) $f_{UCxCLK} = 1/2t_{LO/HI}$ with $t_{LO/HI} \geq \max(t_{VALID,MO(USCI)} + t_{SU,SI(Slave)}, t_{SU,MI(USCI)} + t_{VALID,SO(Slave)})$.
For the slave's parameters $t_{SU,SI(Slave)}$ and $t_{VALID,SO(Slave)}$, refer to the SPI parameters of the attached slave.
(2) Specifies the time to drive the next valid data to the SIMO output after the output changing UCLK clock edge. See the timing diagrams in Figure 12 and Figure 13.
(3) Specifies how long data on the SIMO output is valid after the output changing UCLK clock edge. Negative values indicate that the data on the SIMO output can become invalid before the output changing clock edge observed on UCLK. See the timing diagrams in Figure 12 and Figure 13.

Copyright © 2010–2013, Texas Instruments Incorporated

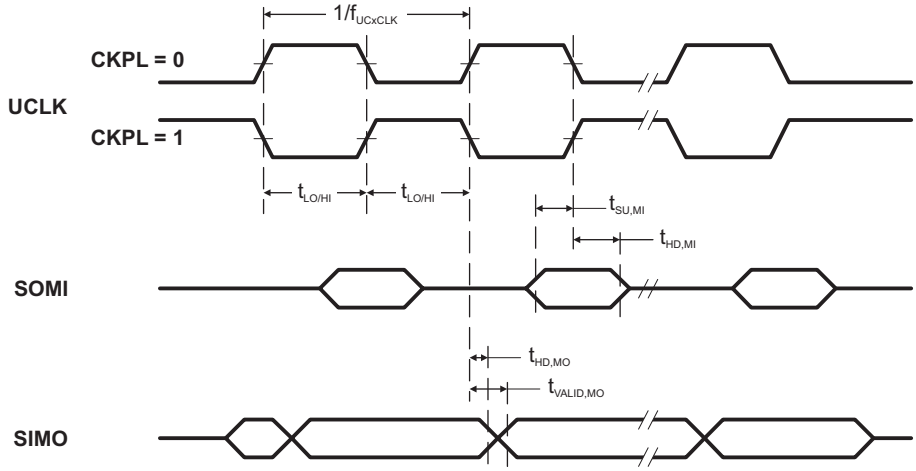

Figure 12. SPI Master Mode, CKPH = 0

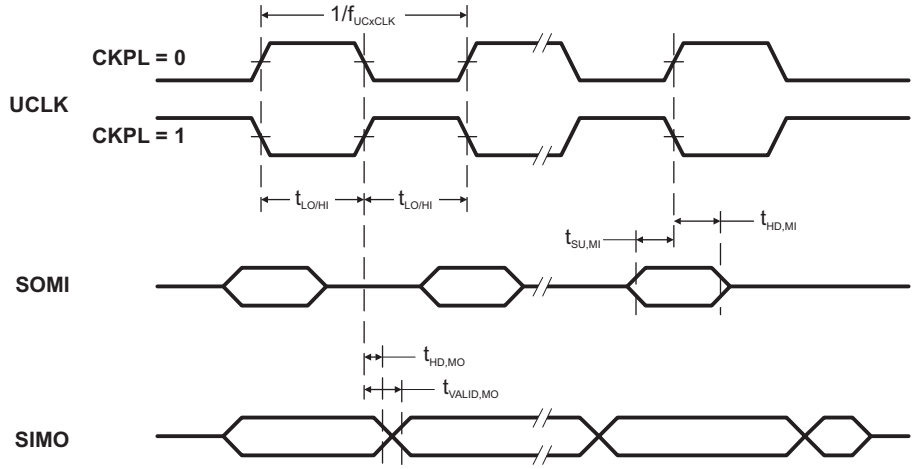

Figure 13. SPI Master Mode, CKPH = 1

USCI (SPI Slave Mode)

over recommended ranges of supply voltage and operating free-air temperature (unless otherwise noted) (see Note (1), Figure 14 and Figure 15)

PARAMETER		TEST CONDITIONS	V_{CC}	MIN	TYP	MAX	UNIT
$t_{STE,LEAD}$	STE lead time, STE low to clock	PMMCOREV = 0	1.8 V	11			ns
			3 V	8			
		PMMCOREV = 3	2.4 V	7			ns
			3 V	6			
$t_{STE,LAG}$	STE lag time, Last clock to STE high	PMMCOREV = 0	1.8 V	3			ns
			3 V	3			
		PMMCOREV = 3	2.4 V	3			ns
			3 V	3			
$t_{STE,ACC}$	STE access time, STE low to SOMI data out	PMMCOREV = 0	1.8 V			66	ns
			3 V			50	
		PMMCOREV = 3	2.4 V			36	ns
			3 V			30	
$t_{STE,DIS}$	STE disable time, STE high to SOMI high impedance	PMMCOREV = 0	1.8 V			30	ns
			3 V			23	
		PMMCOREV = 3	2.4 V			16	ns
			3 V			13	
$t_{SU,SI}$	SIMO input data setup time	PMMCOREV = 0	1.8 V	5			ns
			3 V	5			
		PMMCOREV = 3	2.4 V	2			ns
			3 V	2			
$t_{HD,SI}$	SIMO input data hold time	PMMCOREV = 0	1.8 V	5			ns
			3 V	5			
		PMMCOREV = 3	2.4 V	5			ns
			3 V	5			
$t_{VALID,SO}$	SOMI output data valid time (2)	UCLK edge to SOMI valid, C_L = 20 pF, PMMCOREV = 0	1.8 V			76	ns
			3 V			60	
		UCLK edge to SOMI valid, C_L = 20 pF, PMMCOREV = 3	2.4 V			44	ns
			3 V			40	
$t_{HD,SO}$	SOMI output data hold time (3)	C_L = 20 pF, PMMCOREV = 0	1.8 V	18			ns
			3 V	12			
		C_L = 20 pF, PMMCOREV = 3	2.4 V	10			ns
			3 V	8			

(1) $f_{UCxCLK} = 1/2t_{LO/HI}$ with $t_{LO/HI} \geq \max(t_{VALID,MO(Master)} + t_{SU,SI(USCI)}, t_{SU,MI(Master)} + t_{VALID,SO(USCI)})$.
For the master's parameters $t_{SU,MI(Master)}$ and $t_{VALID,MO(Master)}$, refer to the SPI parameters of the attached slave.

(2) Specifies the time to drive the next valid data to the SOMI output after the output changing UCLK clock edge. See the timing diagrams in Figure 12 and Figure 13.

(3) Specifies how long data on the SOMI output is valid after the output changing UCLK clock edge. See the timing diagrams in Figure 12 and Figure 13.

Copyright © 2010–2013, Texas Instruments Incorporated

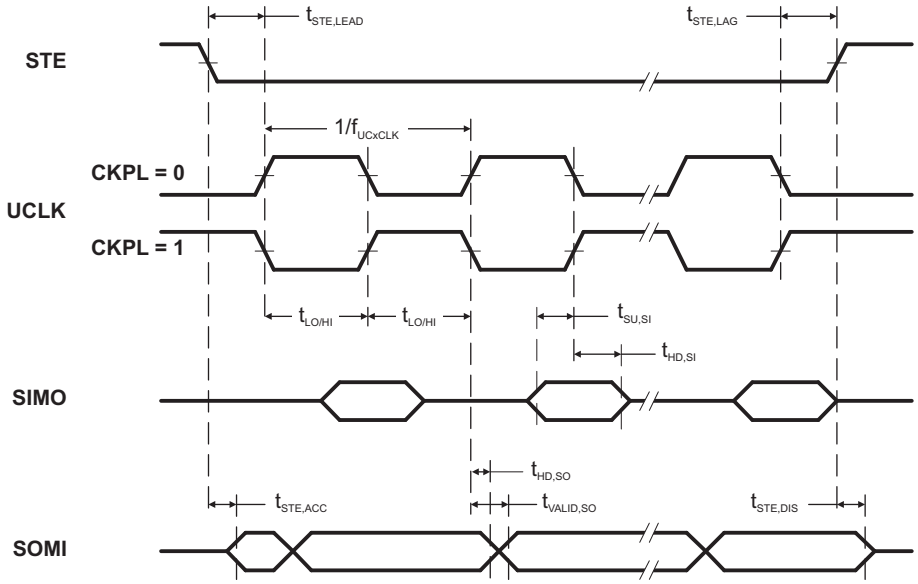

Figure 14. SPI Slave Mode, CKPH = 0

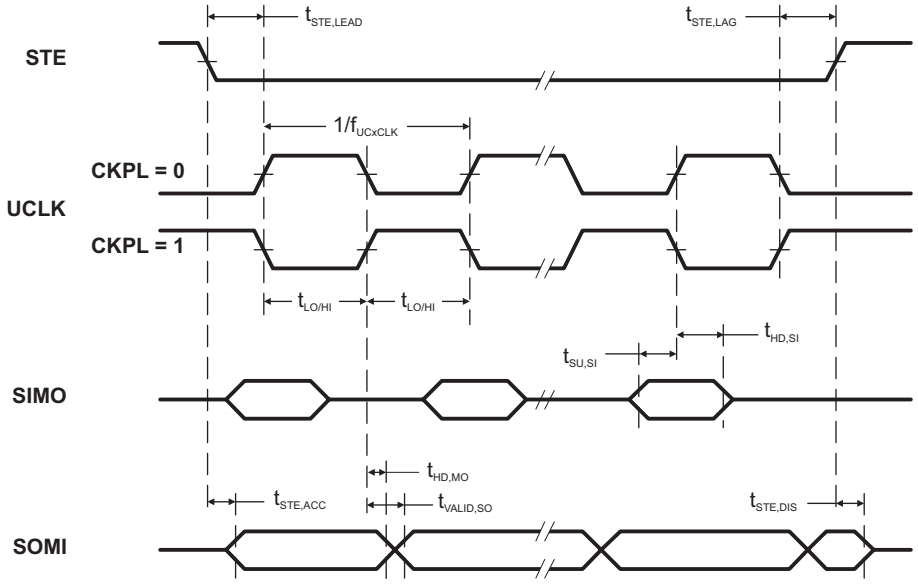

Figure 15. SPI Slave Mode, CKPH = 1

USCI (I2C Mode)

over recommended ranges of supply voltage and operating free-air temperature (unless otherwise noted) (see Figure 16)

PARAMETER		TEST CONDITIONS	V_{CC}	MIN	TYP	MAX	UNIT
f_{USCI}	USCI input clock frequency	Internal: SMCLK, ACLK External: UCLK Duty cycle = 50% ± 10%				f_{SYSTEM}	MHz
f_{SCL}	SCL clock frequency		2.2 V, 3 V	0		400	kHz
$t_{HD,STA}$	Hold time (repeated) START	f_{SCL} ≤ 100 kHz	2.2 V, 3 V	4.0			µs
		f_{SCL} > 100 kHz		0.6			
$t_{SU,STA}$	Setup time for a repeated START	f_{SCL} ≤ 100 kHz	2.2 V, 3 V	4.7			µs
		f_{SCL} > 100 kHz		0.6			
$t_{HD,DAT}$	Data hold time		2.2 V, 3 V	0			ns
$t_{SU,DAT}$	Data setup time		2.2 V, 3 V	250			ns
$t_{SU,STO}$	Setup time for STOP	f_{SCL} ≤ 100 kHz	2.2 V, 3 V	4.0			µs
		f_{SCL} > 100 kHz		0.6			
t_{SP}	Pulse duration of spikes suppressed by input filter		2.2 V	50		600	ns
			3 V	50		600	

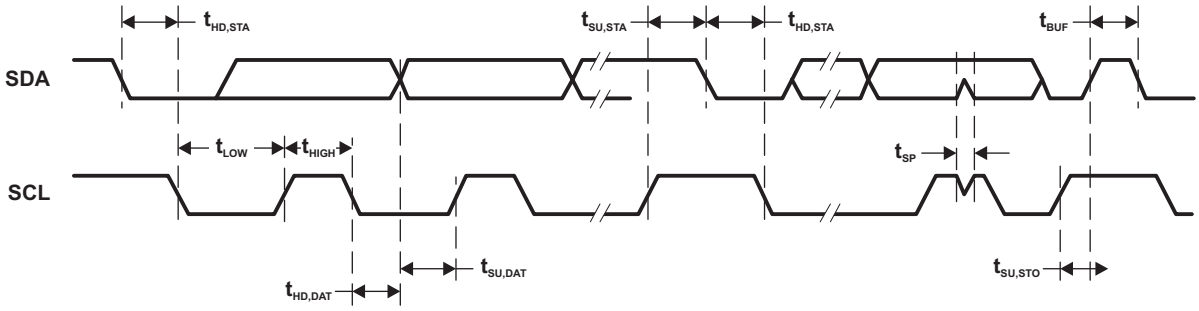

Figure 16. I2C Mode Timing

Copyright © 2010–2013, Texas Instruments Incorporated

12-Bit ADC, Power Supply and Input Range Conditions

over recommended ranges of supply voltage and operating free-air temperature (unless otherwise noted)[1]

PARAMETER		TEST CONDITIONS	V_{CC}	MIN	TYP	MAX	UNIT
AV_{CC}	Analog supply voltage, Full performance	AV_{CC} and DV_{CC} are connected together, AV_{SS} and DV_{SS} are connected together, $V_{(AVSS)} = V_{(DVSS)} = 0$ V		2.2		3.6	V
$V_{(Ax)}$	Analog input voltage range[2]	All ADC12 analog input pins Ax		0		AV_{CC}	V
I_{ADC12_A}	Operating supply current into AVCC terminal[3]	$f_{ADC12CLK}$ = 5.0 MHz, ADC12ON = 1, REFON = 0, SHT0 = 0, SHT1 = 0, ADC12DIV = 0	2.2 V		125	155	µA
			3 V		150	220	
C_I	Input capacitance	Only one terminal Ax can be selected at one time	2.2 V		20	25	pF
R_I	Input MUX ON resistance	$0 V \le V_{Ax} \le AV_{CC}$		10	200	1900	Ω

(1) The leakage current is specified by the digital I/O input leakage.
(2) The analog input voltage range must be within the selected reference voltage range V_{R+} to V_{R-} for valid conversion results. If the reference voltage is supplied by an external source or if the internal reference voltage is used and REFOUT = 1, then decoupling capacitors are required. See REF, External Reference and REF, Built-In Reference.
(3) The internal reference supply current is not included in current consumption parameter I_{ADC12_A}.

12-Bit ADC, Timing Parameters

over recommended ranges of supply voltage and operating free-air temperature (unless otherwise noted)

PARAMETER		TEST CONDITIONS	V_{CC}	MIN	TYP	MAX	UNIT
$f_{ADC12CLK}$		For specified performance of ADC12 linearity parameters	2.2 V, 3 V	0.45	4.8	5.4	MHz
$f_{ADC12OSC}$	Internal ADC12 oscillator[1]	ADC12DIV = 0, $f_{ADC12CLK} = f_{ADC12OSC}$	2.2 V, 3 V	4.2	4.8	5.4	MHz
$t_{CONVERT}$	Conversion time	REFON = 0, Internal oscillator, $f_{ADC12OSC}$ = 4.2 MHz to 5.4 MHz	2.2 V, 3 V	2.4		3.1	µs
		External $f_{ADC12CLK}$ from ACLK, MCLK or SMCLK, ADC12SSEL ≠ 0			(2)		
t_{Sample}	Sampling time	R_S = 400 Ω, R_I = 1000 Ω, C_I = 20 pF, $\tau = [R_S + R_I] \times C_I$ [3]	2.2 V, 3 V	1000			ns

(1) The ADC12OSC is sourced directly from MODOSC inside the UCS.
(2) $13 \times ADC12DIV \times 1/f_{ADC12CLK}$
(3) Approximately ten Tau (τ) are needed to get an error of less than ±0.5 LSB:
$t_{Sample} = \ln(2^{n+1}) \times (R_S + R_I) \times C_I + 800$ ns, where n = ADC resolution = 12, R_S = external source resistance

12-Bit ADC, Linearity Parameters

over recommended ranges of supply voltage and operating free-air temperature (unless otherwise noted)

PARAMETER		TEST CONDITIONS	V_{CC}	MIN	TYP	MAX	UNIT
E_I	Integral linearity error (INL)	$1.4 V \le (V_{eREF+} - V_{REF-}/V_{eREF-})min \le 1.6 V$	2.2 V, 3 V			±2	LSB
		$1.6 V < (V_{eREF+} - V_{REF-}/V_{eREF-})min \le V_{AVCC}$				±1.7	
E_D	Differential linearity error (DNL)	$(V_{eREF+} - V_{REF-}/V_{eREF-})min \le (V_{eREF+} - V_{REF-}/V_{eREF-})$, C_{VREF+} = 20 pF	2.2 V, 3 V			±1.0	LSB
E_O	Offset error	$(V_{eREF+} - V_{REF-}/V_{eREF-})min \le (V_{eREF+} - V_{REF-}/V_{eREF-})$, Internal impedance of source R_S < 100 Ω, C_{VREF+} = 20 pF	2.2 V, 3 V		±1.0	±2.0	LSB
E_G	Gain error	$(V_{eREF+} - V_{REF-}/V_{eREF-})min \le (V_{eREF+} - V_{REF-}/V_{eREF-})$, C_{VREF+} = 20 pF	2.2 V, 3 V		±1.0	±2.0	LSB
E_T	Total unadjusted error	$(V_{eREF+} - V_{REF-}/V_{eREF-})min \le (V_{eREF+} - V_{REF-}/V_{eREF-})$, C_{VREF+} = 20 pF	2.2 V, 3 V		±1.4	±3.5	LSB

Copyright © 2010–2013, Texas Instruments Incorporated

12-Bit ADC, Temperature Sensor and Built-In V_{MID} (1)

over recommended ranges of supply voltage and operating free-air temperature (unless otherwise noted)

PARAMETER		TEST CONDITIONS	V_{CC}	MIN	TYP	MAX	UNIT
V_{SENSOR}	See (2)	ADC12ON = 1, INCH = 0Ah, T_A = 0°C	2.2 V		680		mV
			3 V		680		
TC_{SENSOR}		ADC12ON = 1, INCH = 0Ah	2.2 V		2.25		mV/°C
			3 V		2.25		
$t_{SENSOR(sample)}$	Sample time required if channel 10 is selected (3)	ADC12ON = 1, INCH = 0Ah, Error of conversion result ≤ 1 LSB	2.2 V	100			µs
			3 V	100			
V_{MID}	AV_{CC} divider at channel 11, V_{AVCC} factor	ADC12ON = 1, INCH = 0Bh		0.48	0.5	0.52	V_{AVCC}
	AV_{CC} divider at channel 11	ADC12ON = 1, INCH = 0Bh	2.2 V	1.06	1.1	1.14	V
			3 V	1.44	1.5	1.56	
$t_{VMID(sample)}$	Sample time required if channel 11 is selected (4)	ADC12ON = 1, INCH = 0Bh, Error of conversion result ≤ 1 LSB	2.2 V, 3 V	1000			ns

(1) The temperature sensor is provided by the REF module. See the REF module parametric, I_{REF+}, regarding the current consumption of the temperature sensor.
(2) The temperature sensor offset can be significant. A single-point calibration is recommended to minimize the offset error of the built-in temperature sensor. The TLV structure contains calibration values for 30°C ± 3°C and 85°C ± 3°C for each of the available reference voltage levels. The sensor voltage can be computed as $V_{SENSE} = TC_{SENSOR} \times (\text{Temperature,°C}) + V_{SENSOR}$, where TC_{SENSOR} and V_{SENSOR} can be computed from the calibration values for higher accuracy. See also the *MSP430x5xx and MSP430x6xx Family User's Guide* (SLAU208).
(3) The typical equivalent impedance of the sensor is 51 kΩ. The sample time required includes the sensor-on time $t_{SENSOR(on)}$.
(4) The on-time $t_{VMID(on)}$ is included in the sampling time $t_{VMID(sample)}$; no additional on time is needed.

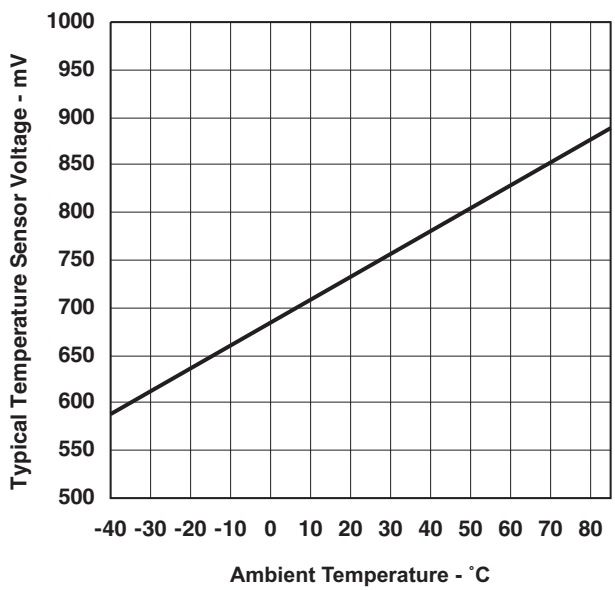

Figure 17. Typical Temperature Sensor Voltage

Copyright © 2010–2013, Texas Instruments Incorporated

REF, External Reference

over recommended ranges of supply voltage and operating free-air temperature (unless otherwise noted)[1]

PARAMETER		TEST CONDITIONS	V_{CC}	MIN	TYP	MAX	UNIT
V_{eREF+}	Positive external reference voltage input	$V_{eREF+} > V_{REF-}/V_{eREF-}$ [2]		1.4		AV_{CC}	V
V_{REF-}/V_{eREF-}	Negative external reference voltage input	$V_{eREF+} > V_{REF-}/V_{eREF-}$ [3]		0		1.2	V
(V_{eREF+} – V_{REF-}/V_{eREF-})	Differential external reference voltage input	$V_{eREF+} > V_{REF-}/V_{eREF-}$ [4]		1.4		AV_{CC}	V
I_{VeREF+}, $I_{VREF-/VeREF-}$	Static input current	1.4 V ≤ V_{eREF+} ≤ V_{AVCC} , V_{eREF-} = 0 V $f_{ADC12CLK}$ = 5 MHz,ADC12SHTx = 1h, Conversion rate 200 ksps	2.2 V, 3 V		±8.5	±26	µA
		1.4 V ≤ V_{eREF+} ≤ V_{AVCC} , V_{eREF-} = 0 V $f_{ADC12CLK}$ = 5 MHz,ADC12SHTx = 8h, Conversion rate 20 ksps	2.2 V, 3 V			±1	µA
$C_{VREF+/-}$	Capacitance at VREF+ or VREF- terminal	See [5]		10			µF

(1) The external reference is used during ADC conversion to charge and discharge the capacitance array. The input capacitance, C_i, is also the dynamic load for an external reference during conversion. The dynamic impedance of the reference supply should follow the recommendations on analog-source impedance to allow the charge to settle for 12-bit accuracy.
(2) The accuracy limits the minimum positive external reference voltage. Lower reference voltage levels may be applied with reduced accuracy requirements.
(3) The accuracy limits the maximum negative external reference voltage. Higher reference voltage levels may be applied with reduced accuracy requirements.
(4) The accuracy limits minimum external differential reference voltage. Lower differential reference voltage levels may be applied with reduced accuracy requirements.
(5) Two decoupling capacitors, 10 µF and 100 nF, should be connected to VREF to decouple the dynamic current required for an external reference source if it is used for the ADC12_A. See also the *MSP430x5xx and MSP430x6xx Family User's Guide* (SLAU208).

REF, Built-In Reference

over recommended ranges of supply voltage and operating free-air temperature (unless otherwise noted)[1]

PARAMETER		TEST CONDITIONS	V_{CC}	MIN	TYP	MAX	UNIT
V_{REF+}	Positive built-in reference voltage output	REFVSEL = {2} for 2.5 V, REFON = REFOUT = 1, I_{VREF+}= 0 A	3 V		2.50	±1.5%	V
		REFVSEL = {1} for 2.0 V, REFON = REFOUT = 1, I_{VREF+}= 0 A	3 V		1.98	±1.5%	
		REFVSEL = {0} for 1.5 V, REFON = REFOUT = 1, I_{VREF+}= 0 A	2.2 V, 3 V		1.49	±1.5%	
$AV_{CC(min)}$	AVCC minimum voltage, Positive built-in reference active	REFVSEL = {0} for 1.5 V, reduced performance		1.8			V
		REFVSEL = {0} for 1.5 V		2.2			
		REFVSEL = {1} for 2.0 V		2.3			
		REFVSEL = {2} for 2.5 V		2.8			
I_{REF+}	Operating supply current into AVCC terminal[2] [3]	REFON = 1, REFOUT = 0, REFBURST = 0	3 V		100	140	µA
		REFON = 1, REFOUT = 1, REFBURST = 0	3 V		0.9	1.5	mA
$I_{L(VREF+)}$	Load-current regulation, VREF+ terminal[4]	REFVSEL = {0, 1, 2}, I_{VREF+} = +10 µA/–1000 µA, AV_{CC} = $AV_{CC\ (min)}$ for each reference level, REFVSEL = (0, 1, 2}, REFON = REFOUT = 1				2500	µV/mA

(1) The reference is supplied to the ADC by the REF module and is buffered locally inside the ADC. The ADC uses two internal buffers, one smaller and one larger for driving the VREF+ terminal. When REFOUT = 1, the reference is available at the VREF+ terminal, as well as, used as the reference for the conversion and utilizes the larger buffer. When REFOUT = 0, the reference is only used as the reference for the conversion and utilizes the smaller buffer.
(2) The internal reference current is supplied via terminal AVCC. Consumption is independent of the ADC12ON control bit, unless a conversion is active. REFOUT = 0 represents the current contribution of the smaller buffer. REFOUT = 1 represents the current contribution of the larger buffer without external load.
(3) The temperature sensor is provided by the REF module. Its current is supplied via terminal AVCC and is equivalent to I_{REF+} with REFON =1 and REFOUT = 0.
(4) Contribution only due to the reference and buffer including package. This does not include resistance due to PCB trace, etc.

Copyright © 2010–2013, Texas Instruments Incorporated

REF, Built-In Reference (continued)

over recommended ranges of supply voltage and operating free-air temperature (unless otherwise noted)[1]

PARAMETER		TEST CONDITIONS	V_{CC}	MIN	TYP	MAX	UNIT
$C_{VREF+/-}$	Capacitance at VREF+ and VREF- terminals	REFON = REFOUT = 1[5]		20		100	pF
TC_{REF+}	Temperature coefficient of built-in reference[6]	I_{VREF+} = 0 A, REFVSEL = (0, 1, 2}, REFON = 1, REFOUT = 0 or 1			30	50	ppm/°C
PSRR_DC	Power supply rejection ratio (DC)	$AV_{CC} = AV_{CC\ (min)} - AV_{CC(max)}$, T_A = 25°C, REFVSEL = (0, 1, 2}, REFON = 1, REFOUT = 0 or 1			120	300	µV/V
PSRR_AC	Power supply rejection ratio (AC)	$AV_{CC} = AV_{CC\ (min)} - AV_{CC(max)}$, T_A = 25°C, f = 1 kHz, ΔVpp = 100 mV, REFVSEL = (0, 1, 2}, REFON = 1, REFOUT = 0 or 1			6.4		mV/V
t_{SETTLE}	Settling time of reference voltage[7]	$AV_{CC} = AV_{CC\ (min)} - AV_{CC(max)}$, REFVSEL = (0, 1, 2}, REFOUT = 0, REFON = 0 → 1			75		µs
		$AV_{CC} = AV_{CC\ (min)} - AV_{CC(max)}$, $C_{VREF} = C_{VREF}$(max), REFVSEL = (0, 1, 2}, REFOUT = 1, REFON = 0 → 1			75		

(5) Two decoupling capacitors, 10 µF and 100 nF, should be connected to VREF to decouple the dynamic current required for an external reference source if it is used for the ADC12_A. See also the *MSP430x5xx and MSP430x6xx Family User's Guide* (SLAU208).
(6) Calculated using the box method: (MAX(-40 to 85°C) – MIN(-40 to 85°C)) / MIN(-40 to 85°C)/(85°C – (–40°C)).
(7) The condition is that the error in a conversion started after t_{REFON} is less than ±0.5 LSB. The settling time depends on the external capacitive load when REFOUT = 1.

Flash Memory

over recommended ranges of supply voltage and operating free-air temperature (unless otherwise noted)

PARAMETER		TEST CONDITIONS	MIN	TYP	MAX	UNIT
$DV_{CC(PGM/ERASE)}$	Program and erase supply voltage		1.8		3.6	V
I_{PGM}	Average supply current from DVCC during program			3	5	mA
I_{ERASE}	Average supply current from DVCC during erase			6	11	mA
I_{MERASE}, I_{BANK}	Average supply current from DVCC during mass erase or bank erase			6	11	mA
t_{CPT}	Cumulative program time	See [1]			16	ms
	Program and erase endurance		10^4	10^5		cycles
$t_{Retention}$	Data retention duration	T_J = 25°C	100			years
t_{Word}	Word or byte program time	See [2]	64		85	µs
$t_{Block,\ 0}$	Block program time for first byte or word	See [2]	49		65	µs
$t_{Block,\ 1–(N–1)}$	Block program time for each additional byte or word, except for last byte or word	See [2]	37		49	µs
$t_{Block,\ N}$	Block program time for last byte or word	See [2]	55		73	µs
t_{Erase}	Erase time for segment, mass erase, and bank erase when available	See [2]	23		32	ms
$f_{MCLK,MGR}$	MCLK frequency in marginal read mode (FCTL4.MGR0 = 1 or FCTL4. MGR1 = 1)		0		1	MHz

(1) The cumulative program time must not be exceeded when writing to a 128-byte flash block. This parameter applies to all programming methods: individual word/byte write and block write modes.
(2) These values are hardwired into the flash controller's state machine.

Copyright © 2010–2013, Texas Instruments Incorporated

JTAG and Spy-Bi-Wire Interface

over recommended ranges of supply voltage and operating free-air temperature (unless otherwise noted)

PARAMETER		TEST CONDITIONS	MIN	TYP	MAX	UNIT
f_{SBW}	Spy-Bi-Wire input frequency	2.2 V, 3 V	0		20	MHz
$t_{SBW,Low}$	Spy-Bi-Wire low clock pulse length	2.2 V, 3 V	0.025		15	µs
$t_{SBW,\ En}$	Spy-Bi-Wire enable time (TEST high to acceptance of first clock edge)(1)	2.2 V, 3 V			1	µs
$t_{SBW,Rst}$	Spy-Bi-Wire return to normal operation time		15		100	µs
f_{TCK}	TCK input frequency, 4-wire JTAG(2)	2.2 V	0		5	MHz
		3 V	0		10	MHz
$R_{internal}$	Internal pulldown resistance on TEST	2.2 V, 3 V	45	60	80	kΩ

(1) Tools that access the Spy-Bi-Wire interface must wait for the $t_{SBW,En}$ time after pulling the TEST/SBWTCK pin high before applying the first SBWTCK clock edge.
(2) f_{TCK} may be restricted to meet the timing requirements of the module selected.

Copyright © 2010–2013, Texas Instruments Incorporated

INPUT/OUTPUT SCHEMATICS

Port P1, P1.0 to P1.7, Input/Output With Schmitt Trigger

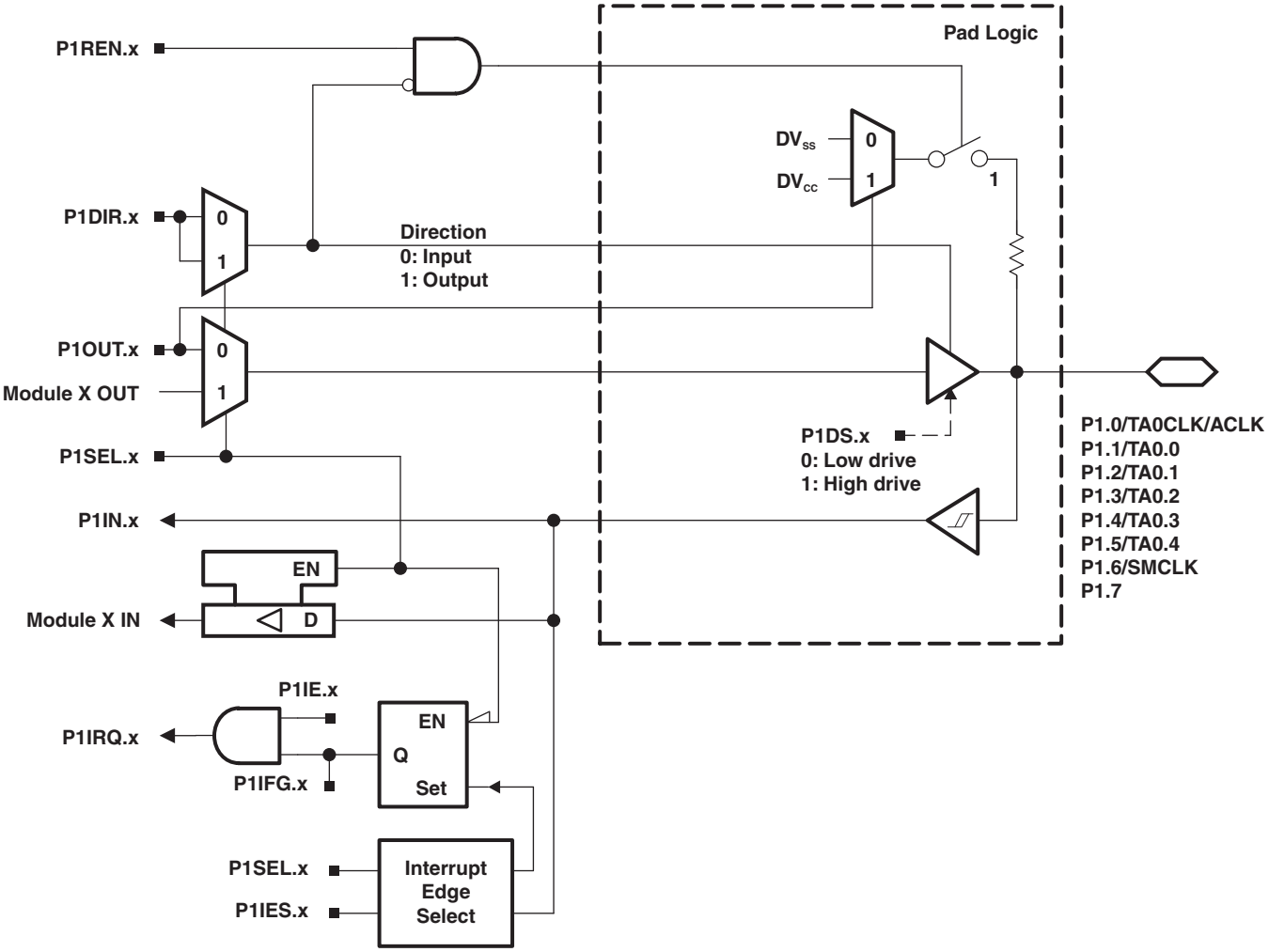

Copyright © 2010–2013, Texas Instruments Incorporated

Table 44. Port P1 (P1.0 to P1.7) Pin Functions

PIN NAME (P1.x)	x	FUNCTION	CONTROL BITS/SIGNALS	
			P1DIR.x	P1SEL.x
P1.0/TA0CLK/ACLK	0	P1.0 (I/O)	I: 0; O: 1	0
		TA0.TA0CLK	0	1
		ACLK	1	1
P1.1/TA0.0	1	P1.1 (I/O)	I: 0; O: 1	0
		TA0.CCI0A	0	1
		TA0.0	1	1
P1.2/TA0.1	2	P1.2 (I/O)	I: 0; O: 1	0
		TA0.CCI1A	0	1
		TA0.1	1	1
P1.3/TA0.2	3	P1.3 (I/O)	I: 0; O: 1	0
		TA0.CCI2A	0	1
		TA0.2	1	1
P1.4/TA0.3	4	P1.4 (I/O)	I: 0; O: 1	0
		TA0.CCI3A	0	1
		TA0.3	1	1
P1.5/TA0.4	5	P1.5 (I/O)	I: 0; O: 1	0
		TA0.CCI4A	0	1
		TA0.4	1	1
P1.6/SMCLK	6	P1.6 (I/O)	I: 0; O: 1	0
		SMCLK	1	1
P1.7	7	P1.7 (I/O)	I: 0; O: 1	0

Copyright © 2010–2013, Texas Instruments Incorporated

Port P2, P2.0 to P2.7, Input/Output With Schmitt Trigger

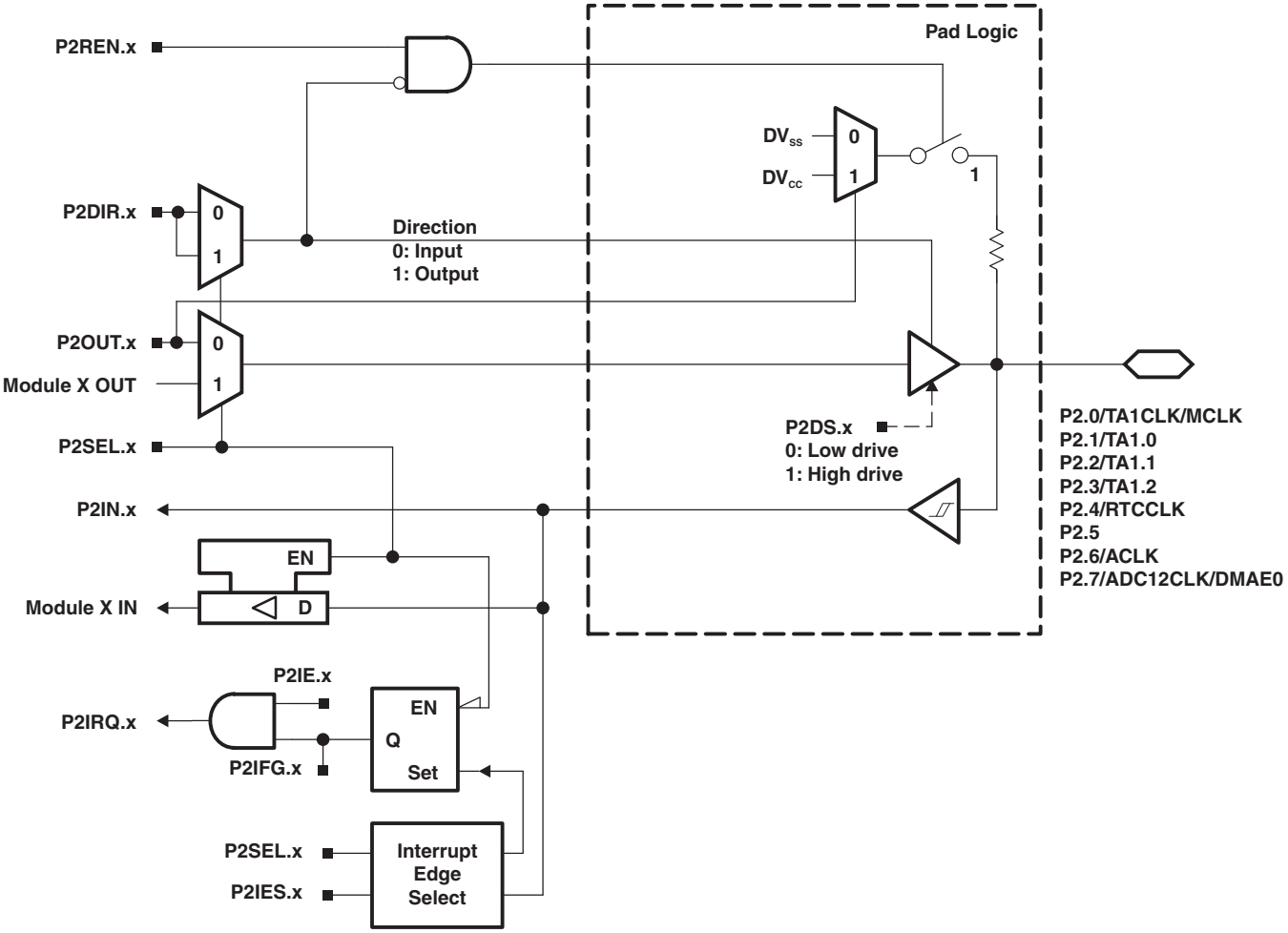

Copyright © 2010–2013, Texas Instruments Incorporated

Table 45. Port P2 (P2.0 to P2.7) Pin Functions

PIN NAME (P2.x)	x	FUNCTION	CONTROL BITS/SIGNALS	
			P2DIR.x	P2SEL.x
P2.0/TA1CLK/MCLK	0	P2.0 (I/O)	I: 0; O: 1	0
		TA1CLK	0	1
		MCLK	1	1
P2.1/TA1.0	1	P2.1 (I/O)	I: 0; O: 1	0
		TA1.CCI0A	0	1
		TA1.0	1	1
P2.2/TA1.1	2	P2.2 (I/O)	I: 0; O: 1	0
		TA1.CCI1A	0	1
		TA1.1	1	1
P2.3/TA1.2	3	P2.3 (I/O)	I: 0; O: 1	0
		TA1.CCI2A	0	1
		TA1.2	1	1
P2.4/RTCCLK	4	P2.4 (I/O)	I: 0; O: 1	0
		RTCCLK	1	1
P2.5	5	P2.5 (I/O	I: 0; O: 1	0
P2.6/ACLK	6	P2.6 (I/O)	I: 0; O: 1	0
		ACLK	1	1
P2.7/ADC12CLK/DMAE0	7	P2.7 (I/O)	I: 0; O: 1	0
		DMAE0	0	1
		ADC12CLK	1	1

Copyright © 2010–2013, Texas Instruments Incorporated

Port P3, P3.0 to P3.7, Input/Output With Schmitt Trigger

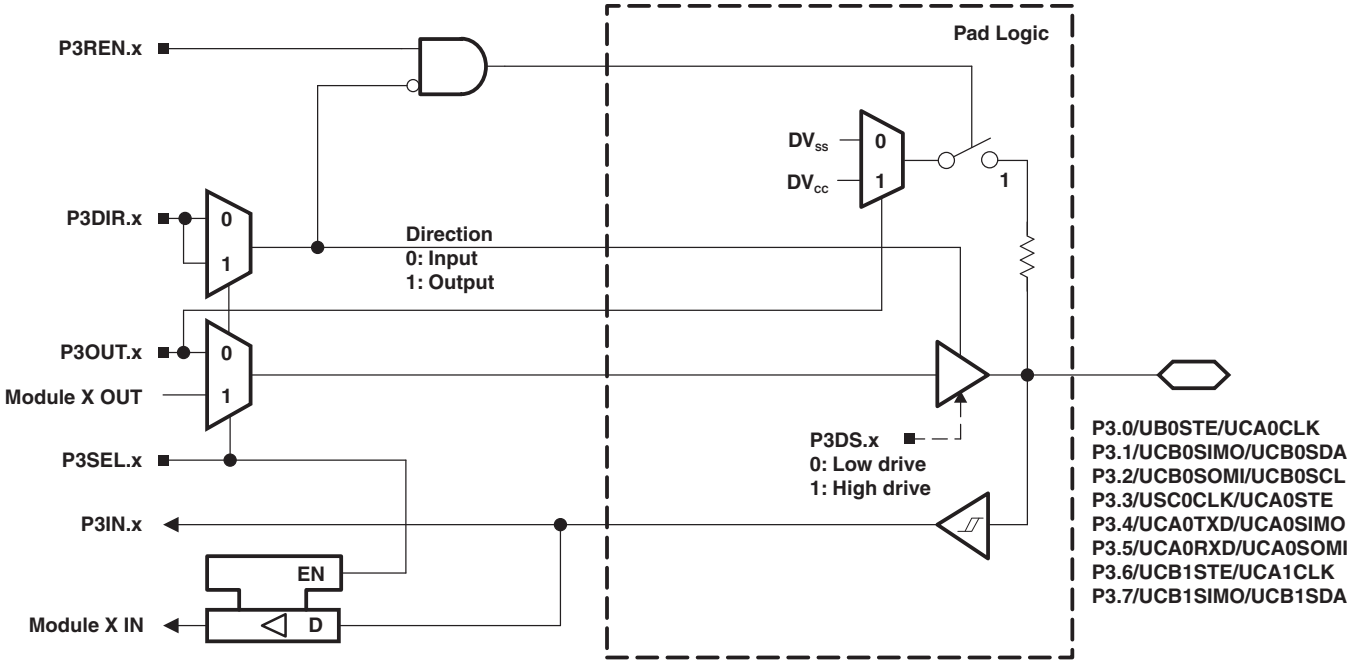

Table 46. Port P3 (P3.0 to P3.7) Pin Functions

PIN NAME (P3.x)	x	FUNCTION	CONTROL BITS/SIGNALS[1]	
			P3DIR.x	P3SEL.x
P3.0/UCB0STE/UCA0CLK	0	P3.0 (I/O)	I: 0; O: 1	0
		UCB0STE/UCA0CLK[2] [3]	X	1
P3.1/UCB0SIMO/UCB0SDA	1	P3.1 (I/O)	I: 0; O: 1	0
		UCB0SIMO/UCB0SDA[2] [4]	X	1
P3.2/UCB0SOMI/UCB0SCL	2	P3.2 (I/O)	I: 0; O: 1	0
		UCB0SOMI/UCB0SCL[2] [4]	X	1
P3.3/UCB0CLK/UCA0STE	3	P3.3 (I/O)	I: 0; O: 1	0
		UCB0CLK/UCA0STE[2]	X	1
P3.4/UCA0TXD/UCA0SIMO	4	P3.4 (I/O)	I: 0; O: 1	0
		UCA0TXD/UCA0SIMO[2]	X	1
P3.5/UCA0RXD/UCA0SOMI	5	P3.5 (I/O)	I: 0; O: 1	0
		UCA0RXD/UCA0SOMI[2]	X	1
P3.6/UCB1STE/UCA1CLK	6	P3.6 (I/O)	I: 0; O: 1	0
		UCB1STE/UCA1CLK[2] [5]	X	1
P3.7/UCB1SIMO/UCB1SDA	7	P3.7 (I/O)	I: 0; O: 1	0
		UCB1SIMO/UCB1SDA[2] [4]	X	1

(1) X = Don't care
(2) The pin direction is controlled by the USCI module.
(3) UCA0CLK function takes precedence over UCB0STE function. If the pin is required as UCA0CLK input or output, USCI B0 is forced to 3-wire SPI mode if 4-wire SPI mode is selected.
(4) If the I2C functionality is selected, the output drives only the logical 0 to V_{SS} level.
(5) UCA1CLK function takes precedence over UCB1STE function. If the pin is required as UCA1CLK input or output, USCI B1 is forced to 3-wire SPI mode if 4-wire SPI mode is selected.

Copyright © 2010–2013, Texas Instruments Incorporated

Port P4, P4.0 to P4.7, Input/Output With Schmitt Trigger

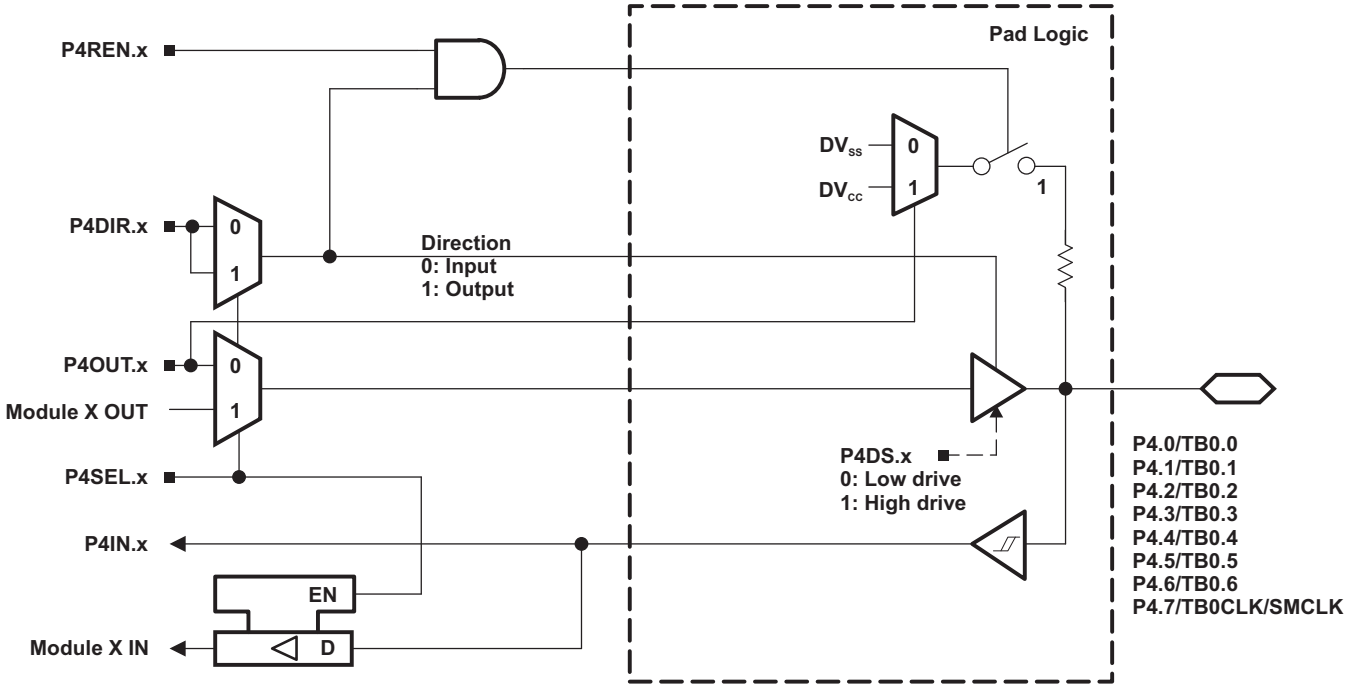

Table 47. Port P4 (P4.0 to P4.7) Pin Functions

PIN NAME (P4.x)	x	FUNCTION	CONTROL BITS/SIGNALS	
			P4DIR.x	P4SEL.x
P4.0/TB0.0	0	4.0 (I/O)	I: 0; O: 1	0
		TB0.CCI0A and TB0.CCI0B	0	1
		TB0.0 (1)	1	1
P4.1/TB0.1	1	4.1 (I/O)	I: 0; O: 1	0
		TB0.CCI1A and TB0.CCI1B	0	1
		TB0.1 (1)	1	1
P4.2/TB0.2	2	4.2 (I/O)	I: 0; O: 1	0
		TB0.CCI2A and TB0.CCI2B	0	1
		TB0.2 (1)	1	1
P4.3/TB0.3	3	4.3 (I/O)	I: 0; O: 1	0
		TB0.CCI3A and TB0.CCI3B	0	1
		TB0.3 (1)	1	1
P4.4/TB0.5	4	4.4 (I/O)	I: 0; O: 1	0
		TB0.CCI4A and TB0.CCI4B	0	1
		TB0.4 (1)	1	1
P4.5/TB0.5	5	4.5 (I/O)	I: 0; O: 1	0
		TB0.CCI5A and TB0.CCI5B	0	1
		TB0.5 (1)	1	1
P4.6/TB0.6	6	4.6 (I/O)	I: 0; O: 1	0
		TB0.CCI6A and TB0.CCI6B	0	1
		TB0.6 (1)	1	1
P4.7/TB0CLK/SMCLK	7	4.7 (I/O)	I: 0; O: 1	0
		TB0CLK	0	1
		SMCLK	1	1

(1) Setting TBOUTH causes all Timer_B configured outputs to be set to high impedance.

Copyright © 2010–2013, Texas Instruments Incorporated

Port P5, P5.0 and P5.1, Input/Output With Schmitt Trigger

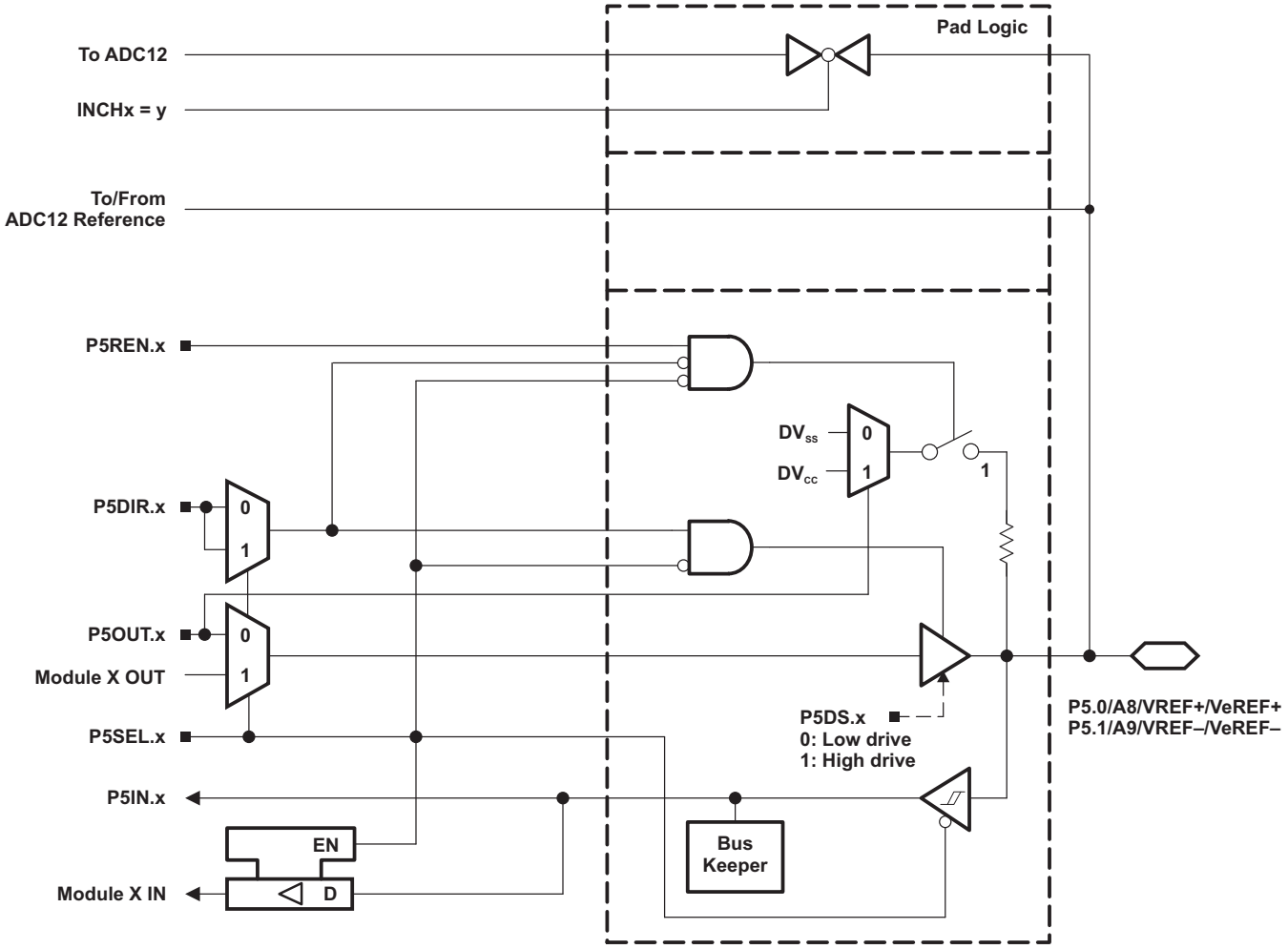

Table 48. Port P5 (P5.0 and P5.1) Pin Functions

PIN NAME (P5.x)	x	FUNCTION	CONTROL BITS/SIGNALS[1]		
			P5DIR.x	P5SEL.x	REFOUT
P5.0/A8/VREF+/VeREF+	0	P5.0 (I/O)[2]	I: 0; O: 1	0	X
		A8/VeREF+[3]	X	1	0
		A8/VREF+[4]	X	1	1
P5.1/A9/VREF–/VeREF–	1	P5.1 (I/O)[2]	I: 0; O: 1	0	X
		A9/VeREF–[5]	X	1	0
		A9/VREF–[6]	X	1	1

(1) X = Don't care
(2) Default condition
(3) Setting the P5SEL.0 bit disables the output driver as well as the input Schmitt trigger to prevent parasitic cross currents when applying analog signals. An external voltage can be applied to VeREF+ and used as the reference for the ADC12_A. Channel A8, when selected with the INCHx bits, is connected to the VREF+/VeREF+ pin.
(4) Setting the P5SEL.0 bit disables the output driver as well as the input Schmitt trigger to prevent parasitic cross currents when applying analog signals. The ADC12_A, VREF+ reference is available at the pin. Channel A8, when selected with the INCHx bits, is connected to the VREF+/VeREF+ pin.
(5) Setting the P5SEL.1 bit disables the output driver as well as the input Schmitt trigger to prevent parasitic cross currents when applying analog signals. An external voltage can be applied to VeREF- and used as the reference for the ADC12_A. Channel A9, when selected with the INCHx bits, is connected to the VREF-/VeREF- pin.
(6) Setting the P5SEL.1 bit disables the output driver as well as the input Schmitt trigger to prevent parasitic cross currents when applying analog signals. The ADC12_A, VREF– reference is available at the pin. Channel A9, when selected with the INCHx bits, is connected to the VREF-/VeREF- pin.

Copyright © 2010–2013, Texas Instruments Incorporated

Port P5, P5.2, Input/Output With Schmitt Trigger

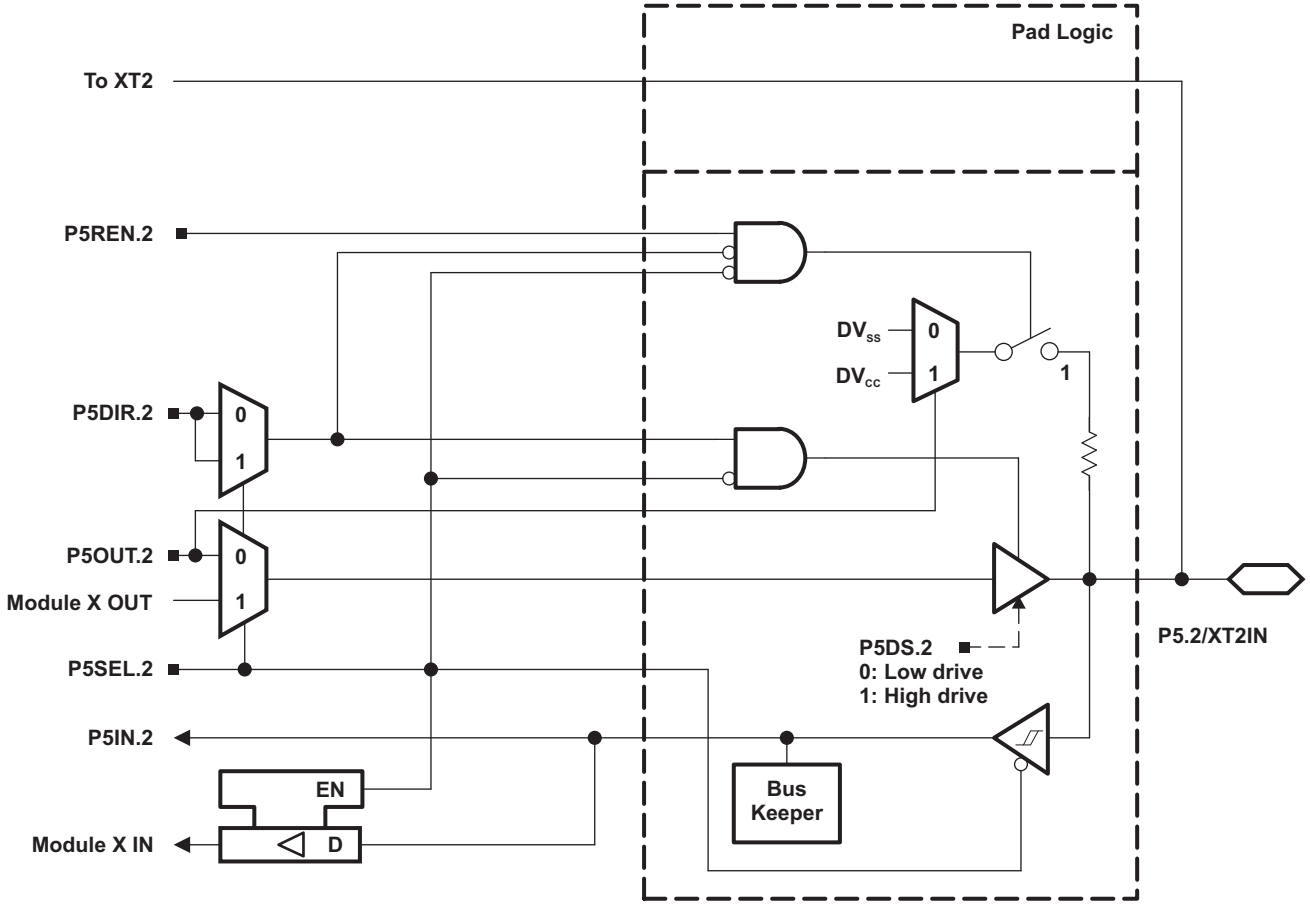

Port P5, P5.3, Input/Output With Schmitt Trigger

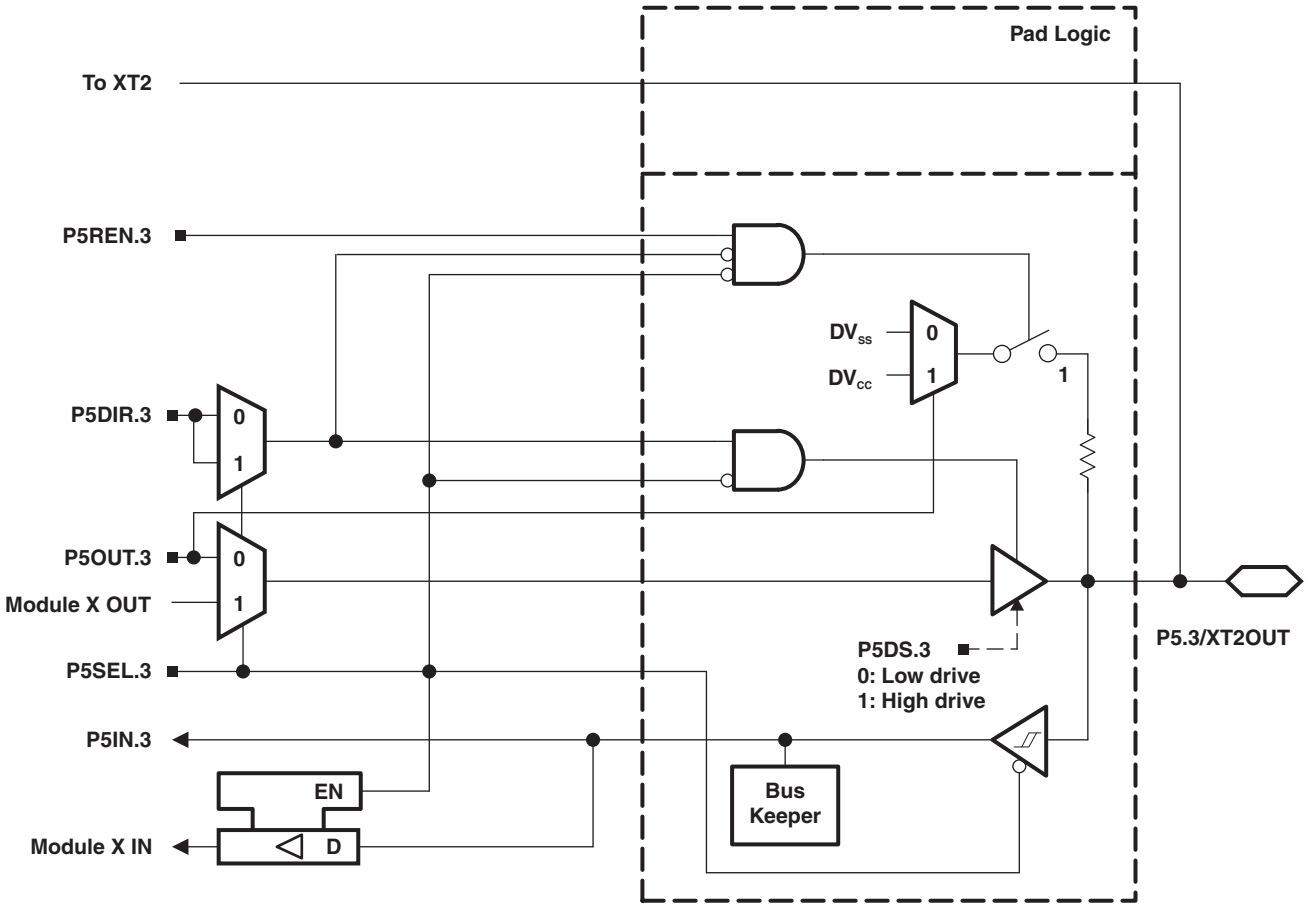

Table 49. Port P5 (P5.2) Pin Functions

PIN NAME (P5.x)	x	FUNCTION	CONTROL BITS/SIGNALS (1)			
			P5DIR.x	P5SEL.2	P5SEL.3	XT2BYPASS
P5.2/XT2IN	2	P5.2 (I/O)	I: 0; O: 1	0	X	X
		XT2IN crystal mode (2)	X	1	X	0
		XT2IN bypass mode (2)	X	1	X	1
P5.3/XT2OUT	3	P5.3 (I/O)	I: 0; O: 1	0	X	X
		XT2OUT crystal mode (3)	X	1	X	0
		P5.3 (I/O) (3)	X	1	X	1

(1) X = Don't care
(2) Setting P5SEL.2 causes the general-purpose I/O to be disabled. Pending the setting of XT2BYPASS, P5.2 is configured for crystal mode or bypass mode.
(3) Setting P5SEL.2 causes the general-purpose I/O to be disabled in crystal mode. When using bypass mode, P5.3 can be used as general-purpose I/O.

Copyright © 2010–2013, Texas Instruments Incorporated

Port P5, P5.4 to P5.7, Input/Output With Schmitt Trigger

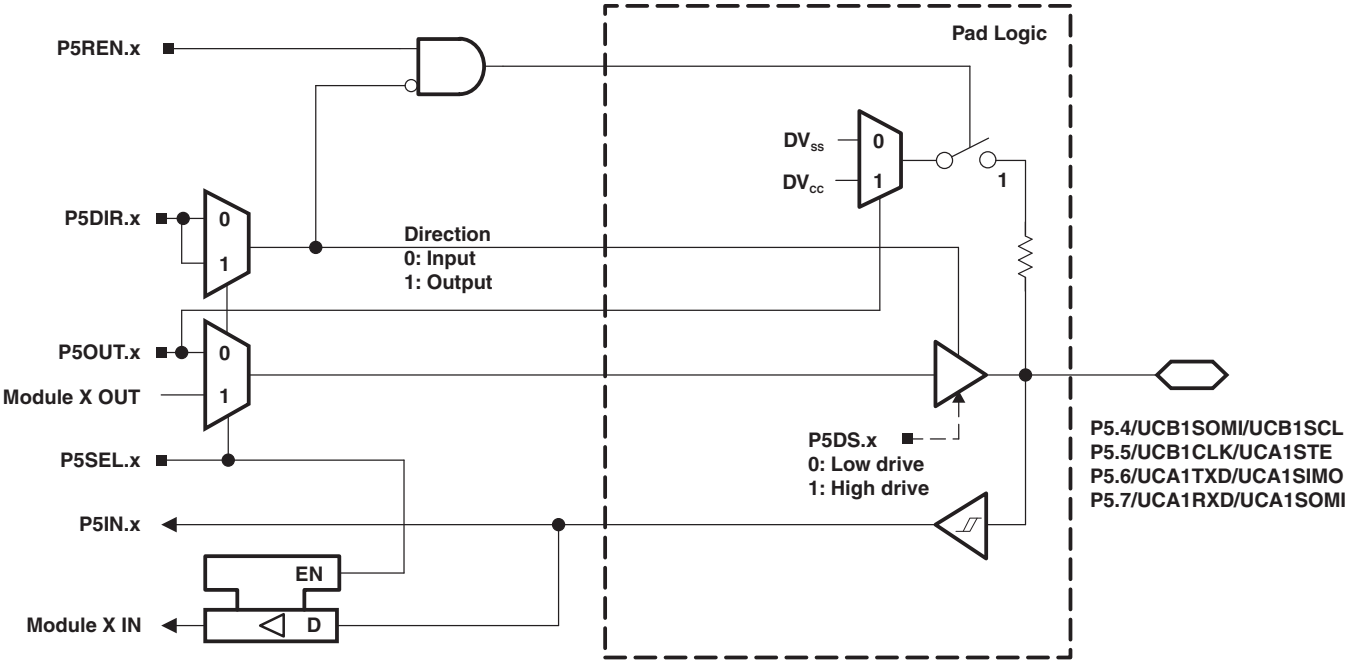

Table 50. Port P5 (P5.4 to P5.7) Pin Functions

PIN NAME (P5.x)	x	FUNCTION	CONTROL BITS/SIGNALS (1)	
			P5DIR.x	P5SEL.x
P5.4/UCB1SOMI/UCB1SCL	4	P5.4 (I/O)	I: 0; O: 1	0
		UCB1SOMI/UCB1SCL (2) (3)	X	1
P5.5/UCB1CLK/UCA1STE	5	P5.5 (I/O)	I: 0; O: 1	0
		UCB1CLK/UCA1STE (2) (4)	X	1
P5.6/UCA1TXD/UCA1SIMO	6	P5.6 (I/O)	I: 0; O: 1	0
		UCA1TXD/UCA1SIMO (2)	X	1
P5.7/UCA1RXD/UCA1SOMI	7	P5.7 (I/O)	I: 0; O: 1	0
		UCA1RXD/UCA1SOMI (2)	X	1

(1) X = Don't care
(2) The pin direction is controlled by the USCI module.
(3) If the I2C functionality is selected, the output drives only the logical 0 to V_{SS} level.
(4) UCB1CLK function takes precedence over UCA1STE function. If the pin is required as UCB1CLK input or output, USCI A1 is forced to 3-wire SPI mode if 4-wire SPI mode is selected.

Copyright © 2010–2013, Texas Instruments Incorporated

Port P6, P6.0 to P6.7, Input/Output With Schmitt Trigger

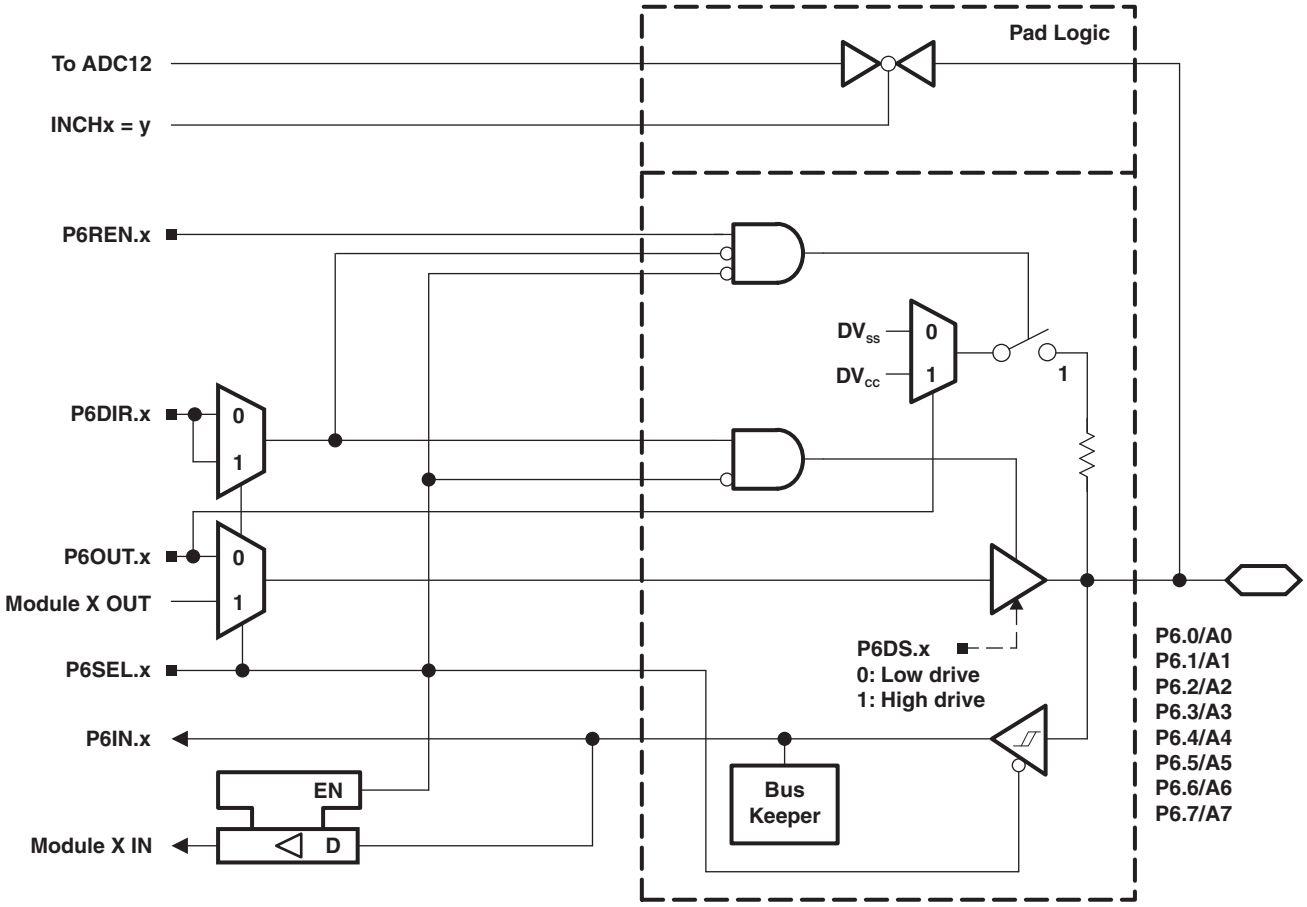

Copyright © 2010–2013, Texas Instruments Incorporated

Table 51. Port P6 (P6.0 to P6.7) Pin Functions

PIN NAME (P6.x)	x	FUNCTION	CONTROL BITS/SIGNALS[1]		
			P6DIR.x	P6SEL.x	INCHx
P6.0/A0	0	P6.0 (I/O)	I: 0; O: 1	0	X
		A0[2] [3]	X	X	0
P6.1/A1	1	P6.1 (I/O)	I: 0; O: 1	0	X
		A1[2] [3]	X	X	1
P6.2/A2	2	P6.2 (I/O)	I: 0; O: 1	0	X
		A2[2] [3]	X	X	2
P6.3/A3	3	P6.3 (I/O)	I: 0; O: 1	0	X
		A3[2] [3]	X	X	3
P6.4/A4	4	P6.4 (I/O)	I: 0; O: 1	0	X
		A4[2] [3]	X	X	4
P6.5/A5	5	P6.5 (I/O)	I: 0; O: 1	0	X
		A5[1] [2] [3]	X	X	5
P6.6/A6	6	P6.6 (I/O)	I: 0; O: 1	0	X
		A6[2] [3]	X	X	6
P6.7/A7	7	P6.7 (I/O)	I: 0; O: 1	0	X
		A7[2] [3]	X	X	7

(1) X = Don't care
(2) Setting the P6SEL.x bit disables the output driver as well as the input Schmitt trigger to prevent parasitic cross currents when applying analog signals.
(3) The ADC12_A channel Ax is connected internally to AV_{SS} if not selected via the respective INCHx bits.

Port P7, P7.0, Input/Output With Schmitt Trigger

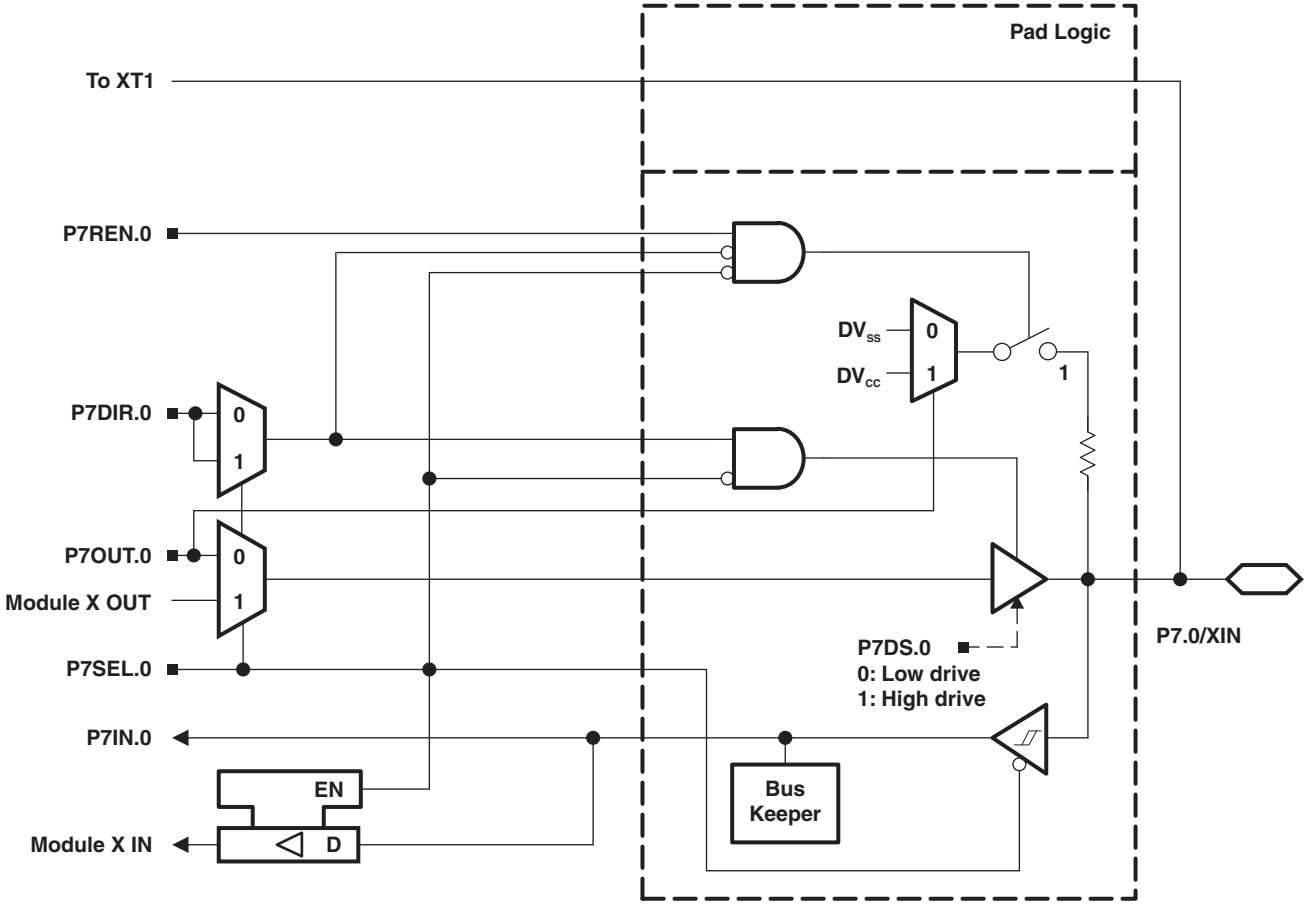

Copyright © 2010–2013, Texas Instruments Incorporated

Port P7, P7.1, Input/Output With Schmitt Trigger

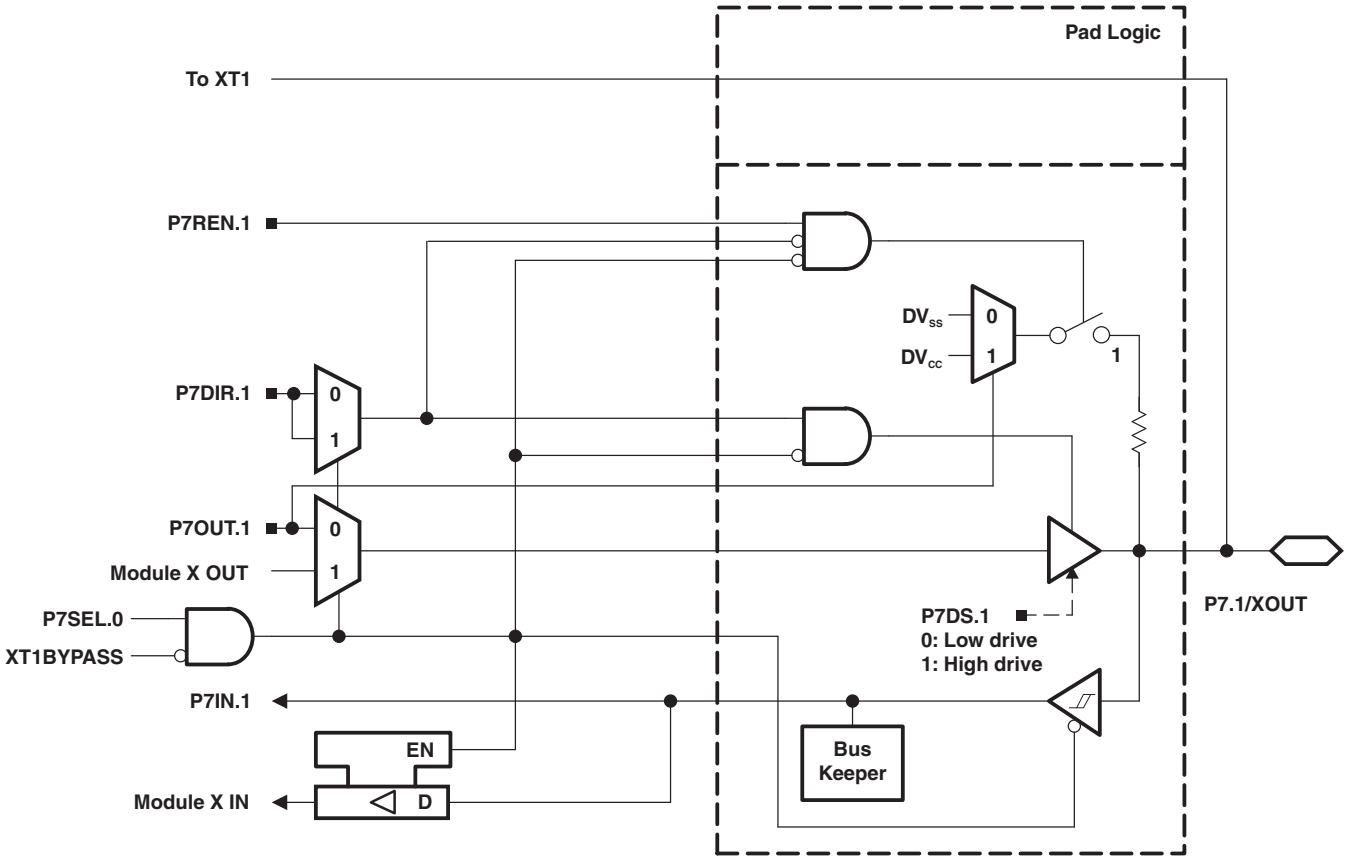

Table 52. Port P7 (P7.0 and P7.1) Pin Functions

PIN NAME (P7.x)	x	FUNCTION	CONTROL BITS/SIGNALS[1]			
			P7DIR.x	P7SEL.0	P7SEL.1	XT1BYPASS
P7.0/XIN	0	P7.0 (I/O)	I: 0; O: 1	0	X	X
		XIN crystal mode[2]	X	1	X	0
		XIN bypass mode[2]	X	1	X	1
P7.1/XOUT	1	P7.1 (I/O)	I: 0; O: 1	0	X	X
		XOUT crystal mode[3]	X	1	X	0
		P7.1 (I/O)[3]	X	1	X	1

(1) X = Don't care
(2) Setting P7SEL.0 causes the general-purpose I/O to be disabled. Pending the setting of XT1BYPASS, P7.0 is configured for crystal mode or bypass mode.
(3) Setting P7SEL.0 causes the general-purpose I/O to be disabled in crystal mode. When using bypass mode, P7.1 can be used as general-purpose I/O.

Copyright © 2010–2013, Texas Instruments Incorporated

Port P7, P7.2 and P7.3, Input/Output With Schmitt Trigger

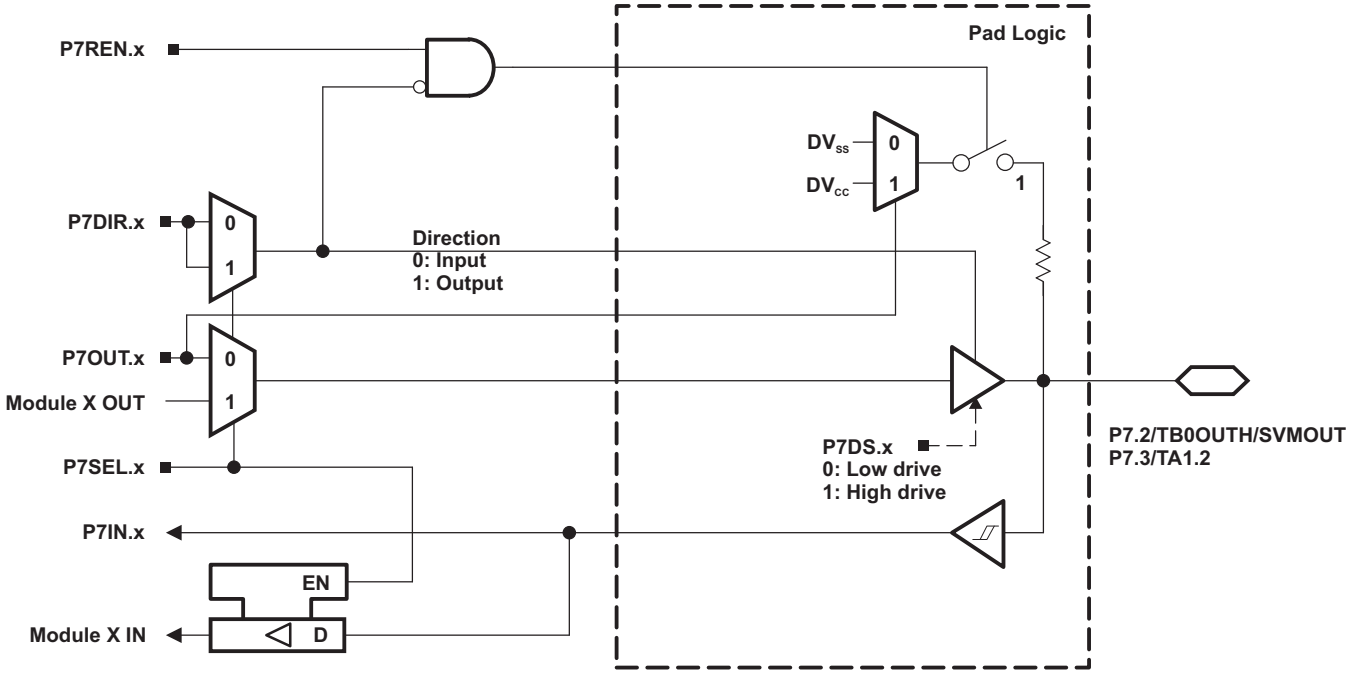

Table 53. Port P7 (P7.2 and P7.3) Pin Functions

PIN NAME (P7.x)	x	FUNCTION	CONTROL BITS/SIGNALS	
			P7DIR.x	P7SEL.x
P7.2/TB0OUTH/SVMOUT	2	P7.2 (I/O)	I: 0; O: 1	0
		TB0OUTH	0	1
		SVMOUT	1	1
P7.3/TA1.2	3	P7.3 (I/O)	I: 0; O: 1	0
		TA1.CCI2B	0	1
		TA1.2	1	1

Copyright © 2010–2013, Texas Instruments Incorporated

Port P7, P7.4 to P7.7, Input/Output With Schmitt Trigger

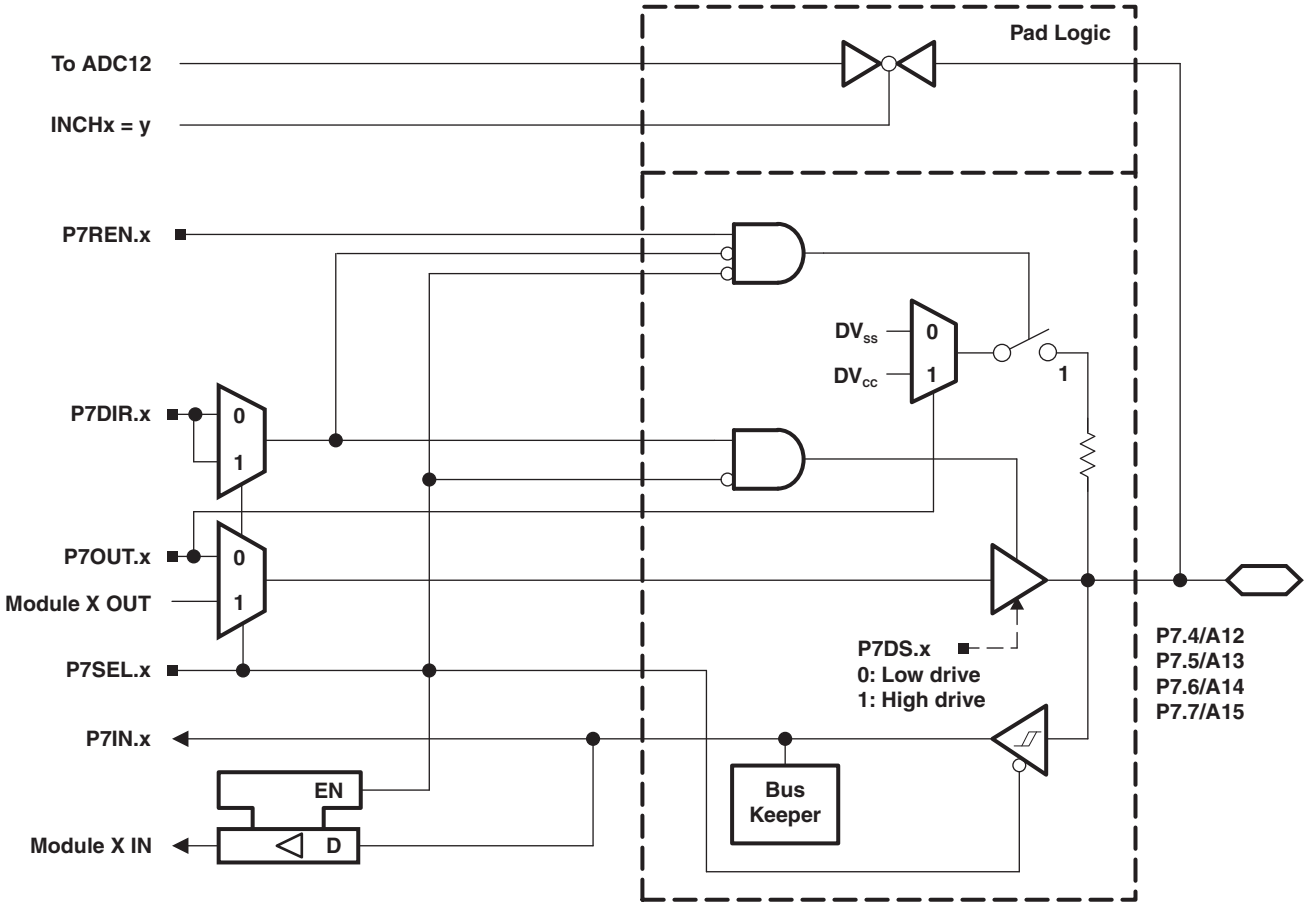

Table 54. Port P7 (P7.4 to P7.7) Pin Functions

PIN NAME (P7.x)	x	FUNCTION	CONTROL BITS/SIGNALS(1)		
			P7DIR.x	P7SEL.x	INCHx
P7.4/A12	4	P7.4 (I/O)	I: 0; O: 1	0	X
		A12(2) (3)	X	X	12
P7.5/A13	5	P7.5 (I/O)	I: 0; O: 1	0	X
		A13(4) (5)	X	X	13
P7.6/A14	6	P7.6 (I/O)	I: 0; O: 1	0	X
		A14(4) (5)	X	X	14
P7.7/A15	7	P7.7 (I/O)	I: 0; O: 1	0	X
		A15(4) (5)	X	X	15

(1) X = Don't care
(2) Setting the P7SEL.x bit disables the output driver as well as the input Schmitt trigger to prevent parasitic cross currents when applying analog signals.
(3) The ADC12_A channel Ax is connected internally to AV_{SS} if not selected via the respective INCHx bits.
(4) Setting the P7SEL.x bit disables the output driver as well as the input Schmitt trigger to prevent parasitic cross currents when applying analog signals.
(5) The ADC12_A channel Ax is connected internally to AV_{SS} if not selected via the respective INCHx bits.

Copyright © 2010–2013, Texas Instruments Incorporated

Port P8, P8.0 to P8.7, Input/Output With Schmitt Trigger

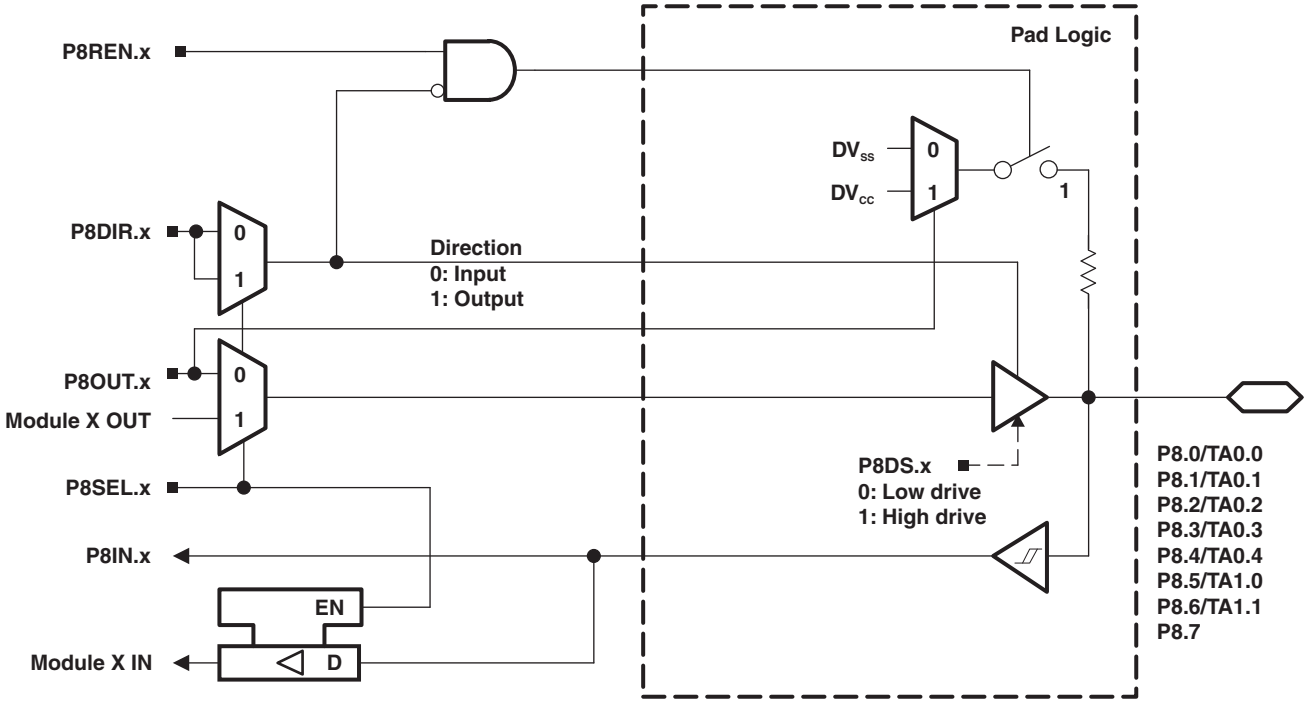

Table 55. Port P8 (P8.0 to P8.7) Pin Functions

PIN NAME (P8.x)	x	FUNCTION	CONTROL BITS/SIGNALS	
			P8DIR.x	P8SEL.x
P8.0/TA0.0	0	P8.0 (I/O)	I: 0; O: 1	0
		TA0.CCI0B	0	1
		TA0.0	1	1
P8.1/TA0.1	1	P8.1 (I/O)	I: 0; O: 1	0
		TA0.CCI1B	0	1
		TA0.1	1	1
P8.2/TA0.2	2	P8.2 (I/O)	I: 0; O: 1	0
		TA0.CCI2B	0	1
		TA0.2	1	1
P8.3/TA0.3	3	P8.3 (I/O)	I: 0; O: 1	0
		TA0.CCI3B	0	1
		TA0.3	1	1
P8.4/TA0.4	4	P8.4 (I/O)	I: 0; O: 1	0
		TA0.CCI4B	0	1
		TA0.4	1	1
P8.5/TA1.0	5	P8.5 (I/O)	I: 0; O: 1	0
		TA1.CCI0B	0	1
		TA1.0	1	1
P8.6/TA1.1	6	P8.6 (I/O)	I: 0; O: 1	0
		TA1.CCI1B	0	1
		TA1.1	1	1
P8.7	7	P8.7 (I/O)	I: 0; O: 1	0

Copyright © 2010–2013, Texas Instruments Incorporated

Port P9, P9.0 to P9.7, Input/Output With Schmitt Trigger

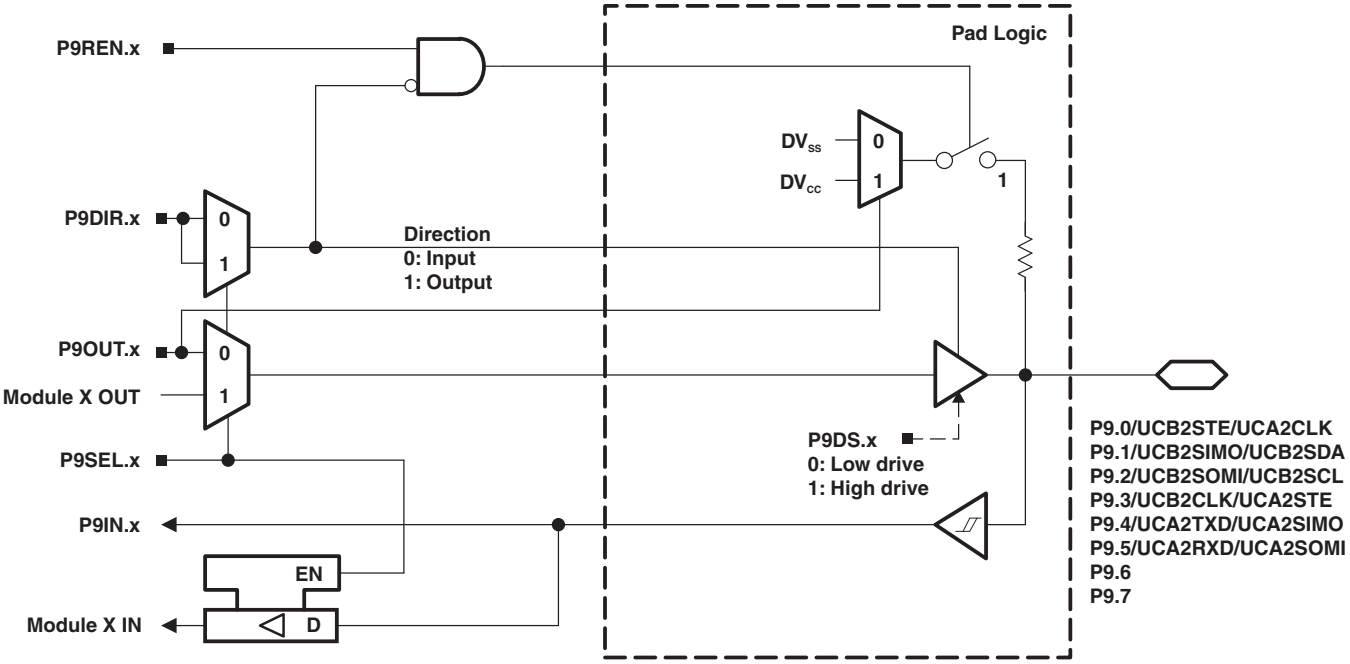

Table 56. Port P9 (P9.0 to P9.7) Pin Functions

PIN NAME (P9.x)	x	FUNCTION	CONTROL BITS/SIGNALS[1]	
			P9DIR.x	P9SEL.x
P9.0/UCB2STE/UCA2CLK	0	P9.0 (I/O)	I: 0; O: 1	0
		UCB2STE/UCA2CLK[2] [3]	X	1
P9.1/UCB2SIMO/UCB2SDA	1	P9.1 (I/O)	I: 0; O: 1	0
		UCB2SIMO/UCB2SDA[2] [4]	X	1
P9.2/UCB2SOMI/UCB2SCL	2	P9.2 (I/O)	I: 0; O: 1	0
		UCB2SOMI/UCB2SCL[2] [4]	X	1
P9.3/UCB2CLK/UCA2STE	3	P9.3 (I/O)	I: 0; O: 1	0
		UCB2CLK/UCA2STE[2] [5]	X	1
P9.4/UCA2TXD/UCA2SIMO	4	P9.4 (I/O)	I: 0; O: 1	0
		UCA2TXD/UCA2SIMO[2]	X	1
P9.5/UCA2RXD/UCA2SOMI	5	P9.5 (I/O)	I: 0; O: 1	0
		UCA2RXD/UCA2SOMI[2]	X	1
P9.6	6	P9.6 (I/O)	I: 0; O: 1	0
P9.7	7	P9.7 (I/O)	I: 0; O: 1	0

(1) X = Don't care
(2) The pin direction is controlled by the USCI module.
(3) UCA2CLK function takes precedence over UCB2STE function. If the pin is required as UCA2CLK input or output, USCI B2 is forced to 3-wire SPI mode if 4-wire SPI mode is selected.
(4) If the I2C functionality is selected, the output drives only the logical 0 to V_{SS} level.
(5) UCB2CLK function takes precedence over UCA2STE function. If the pin is required as UCB2CLK input or output, USCI A2 is forced to 3-wire SPI mode if 4-wire SPI mode is selected.

Copyright © 2010–2013, Texas Instruments Incorporated

Port P10, P10.0 to P10.7, Input/Output With Schmitt Trigger

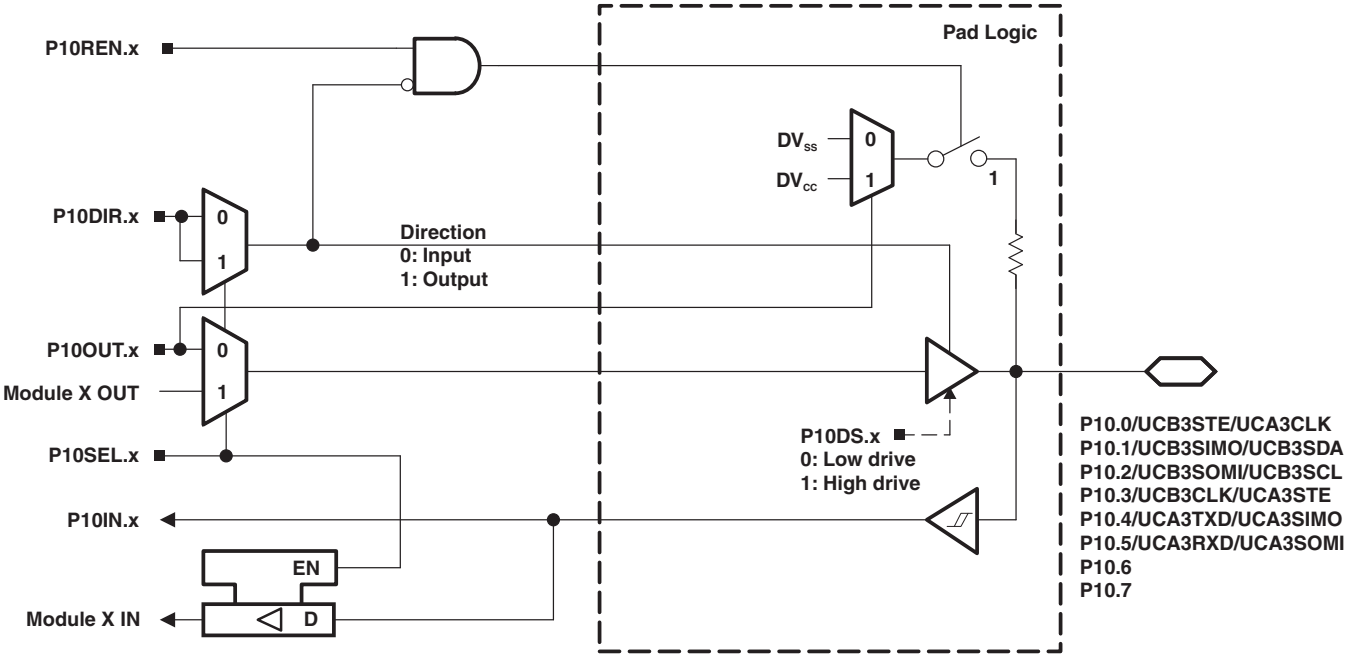

Table 57. Port P10 (P10.0 to P10.7) Pin Functions

PIN NAME (P10.x)	x	FUNCTION	CONTROL BITS/SIGNALS (1)	
			P10DIR.x	P10SEL.x
P10.0/UCB3STE/UCA3CLK	0	P10.0 (I/O)	I: 0; O: 1	0
		UCB3STE/UCA3CLK (2) (3)	X	1
P10.1/UCB3SIMO/UCB3SDA	1	P10.1 (I/O)	I: 0; O: 1	0
		UCB3SIMO/UCB3SDA (2) (4)	X	1
P10.2/UCB3SOMI/UCB3SCL	2	P10.2 (I/O)	I: 0; O: 1	0
		UCB3SOMI/UCB3SCL (2) (4)	X	1
P10.3/UCB3CLK/UCA3STE	3	P10.3 (I/O)	I: 0; O: 1	0
		UCB3CLK/UCA3STE (2)	X	1
P10.4/UCA3TXD/UCA3SIMO	4	P10.4 (I/O)	I: 0; O: 1	0
		UCA3TXD/UCA3SIMO (2)	X	1
P10.5/UCA3RXD/UCA3SOMI	5	P10.5 (I/O)	I: 0; O: 1	0
		UCA3RXD/UCA3SOMI (2)	X	1
P10.6	6	P10.6 (I/O)	I: 0; O: 1	0
		Reserved (5)	X	1
P10.7	7	P10.7 (I/O)	I: 0; O: 1	0
		Reserved (5)	x	1

(1) X = Don't care
(2) The pin direction is controlled by the USCI module.
(3) UCA3CLK function takes precedence over UCB3STE function. If the pin is required as UCA3CLK input or output, USCI B3 is forced to 3-wire SPI mode if 4-wire SPI mode is selected.
(4) If the I2C functionality is selected, the output drives only the logical 0 to V_{SS} level.
(5) The secondary function on these pins are reserved for factory test purposes. Application should keep the P10SEL.x of these ports cleared to prevent potential conflicts with the application.

Copyright © 2010–2013, Texas Instruments Incorporated

Port P11, P11.0 to P11.2, Input/Output With Schmitt Trigger

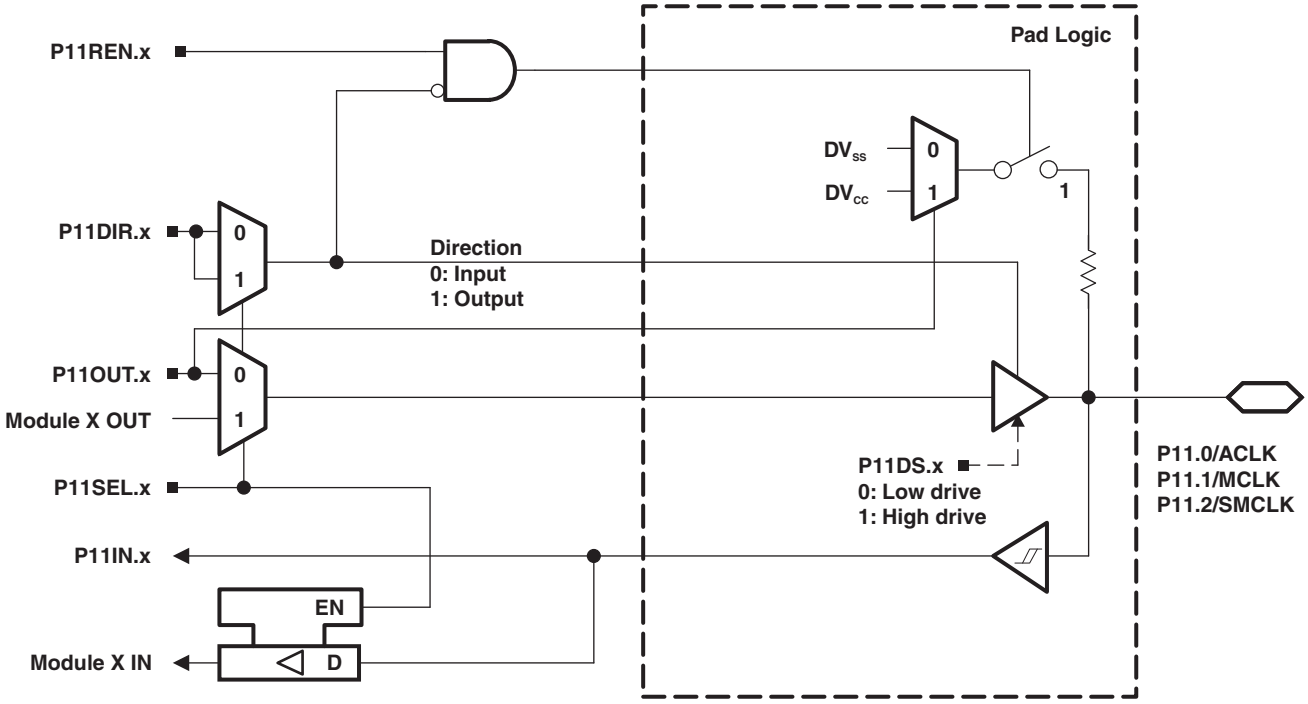

Table 58. Port P11 (P11.0 to P11.2) Pin Functions

PIN NAME (P11.x)	x	FUNCTION	CONTROL BITS/SIGNALS	
			P11DIR.x	P11SEL.x
P11.0/ACLK	0	P11.0 (I/O)	I: 0; O: 1	0
		ACLK	1	1
P11.1/MCLK	1	P11.1 (I/O)	I: 0; O: 1	0
		MCLK	1	1
P11.2/SMCLK	2	P11.2 (I/O)	I: 0; O: 1	0
		SMCLK	1	1

Copyright © 2010–2013, Texas Instruments Incorporated

Port J, J.0 JTAG pin TDO, Input/Output With Schmitt Trigger or Output

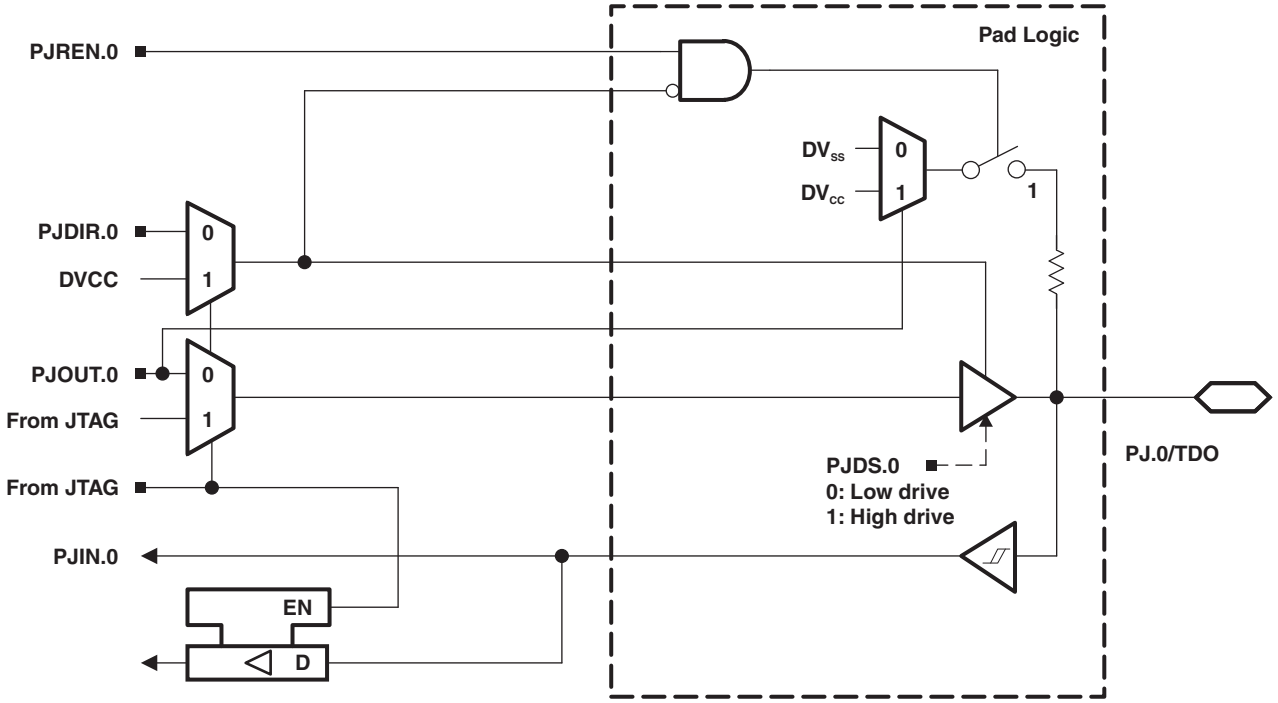

Port J, J.1 to J.3 JTAG pins TMS, TCK, TDI/TCLK, Input/Output With Schmitt Trigger or Output

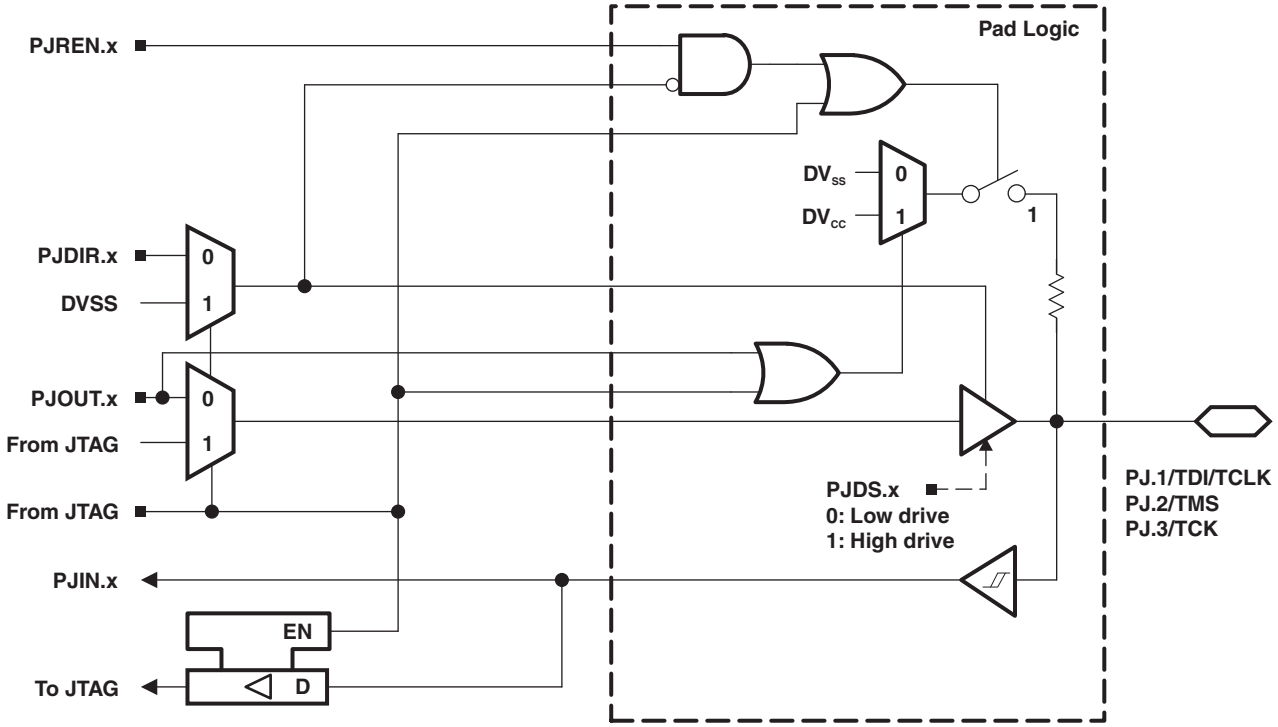

Copyright © 2010–2013, Texas Instruments Incorporated

Table 59. Port PJ (PJ.0 to PJ.3) Pin Functions

PIN NAME (PJ.x)	x	FUNCTION	CONTROL BITS/ SIGNALS[1]
			PJDIR.x
PJ.0/TDO	0	PJ.0 (I/O)[2]	I: 0; O: 1
		TDO[3]	X
PJ.1/TDI/TCLK	1	PJ.1 (I/O)[2]	I: 0; O: 1
		TDI/TCLK[3] [4]	X
PJ.2/TMS	2	PJ.2 (I/O)[2]	I: 0; O: 1
		TMS[3] [4]	X
PJ.3/TCK	3	PJ.3 (I/O)[2]	I: 0; O: 1
		TCK[3] [4]	X

(1) X = Don't care
(2) Default condition
(3) The pin direction is controlled by the JTAG module.
(4) In JTAG mode, pullups are activated automatically on TMS, TCK, and TDI/TCLK. PJREN.x are do not care.

DEVICE DESCRIPTORS (TLV)

Table 60 shows the complete contents of the device descriptor tag-length-value (TLV) structure.

Table 60. Device Descriptor Table(1)

	Description	Address	Size bytes	MSP430BT5190
				Value
Info Block	Info length	01A00h	1	06h
	CRC length	01A01h	1	06h
	CRC value	01A02h	2	per unit
	Device ID	01A04h	1	05h
	Device ID	01A05h	1	80h
	Hardware revision	01A06h	1	per unit
	Firmware revision	01A07h	1	per unit
Die Record	Die Record Tag	01A08h	1	08h
	Die Record length	01A09h	1	0Ah
	Lot/Wafer ID	01A0Ah	4	per unit
	Die X position	01A0Eh	2	per unit
	Die Y position	01A10h	2	per unit
	Test results	01A12h	2	per unit
ADC12 Calibration	ADC12 Calibration Tag	01A14h	1	11h
	ADC12 Calibration length	01A15h	1	10h
	ADC Gain Factor	01A16h	2	per unit
	ADC Offset	01A18h	2	per unit
	ADC 1.5-V Reference Temp. Sensor 30°C	01A1Ah	2	per unit
	ADC 1.5-V Reference Temp. Sensor 85°C	01A1Ch	2	per unit
	ADC 2.0-V Reference Temp. Sensor 30°C	01A1Eh	2	per unit
	ADC 2.0-V Reference Temp. Sensor 85°C	01A20h	2	per unit
	ADC 2.5-V Reference Temp. Sensor 30°C	01A22h	2	per unit
	ADC 2.5-V Reference Temp. Sensor 85°C	01A24h	2	per unit
REF Calibration	REF Calibration Tag	01A26h	1	12h
	REF Calibration length	01A27h	1	06h
	REF 1.5-V Reference	01A28h	2	per unit
	REF 2.0-V Reference	01A2Ah	2	per unit
	REF 2.5-V Reference	01A2Ch	2	per unit
Peripheral Descriptor	Peripheral Descriptor Tag	01A2Eh	1	02h
	Peripheral Descriptor Length	01A2Fh	1	61h
	Memory 1		2	08h 8Ah
	Memory 2		2	0Ch 86h
	Memory 3		2	0Eh 30h
	Memory 4		2	2Eh 98h
	Memory 5		0/1	NA

(1) NA = Not applicable

Copyright © 2010–2013, Texas Instruments Incorporated

Table 60. Device Descriptor Table[1] (continued)

	Description	Address	Size bytes	MSP430BT5190
				Value
	delimiter		1	00h
	Peripheral count		1	21h
	MSP430CPUXV2		2	00h 23h
	SBW		2	00h 0Fh
	EEM-8		2	00h 05h
	TI BSL		2	00h FCh
	Package		2	00h 1Fh
	SFR		2	10h 41h
	PMM		2	02h 30h
	FCTL		2	02h 38h
	CRC16-straight		2	01h 3Ch
	CRC16-bit reversed		2	00h 3Dh
	RAMCTL		2	00h 44h
	WDT_A		2	00h 40h
	UCS		2	01h 48h
	SYS		2	02h 42h
	REF		2	03h A0h
	Port 1/2		2	05h 51h
	Port 3/4		2	02h 52h
	Port 5/6		2	02h 53h
	Port 7/8		2	02h 54h
	Port 9/10		2	02h 55h
	Port 11/12		2	02h 56h
	JTAG		2	08h 5Fh
	TA0		2	02h 62h
	TA1		2	04h 61h
	TB0		2	04h 67h
	RTC		2	0Eh 68h

Copyright © 2010–2013, Texas Instruments Incorporated

Table 60. Device Descriptor Table(1) (continued)

	Description	Address	Size bytes	MSP430BT5190
				Value
	MPY32		2	02h 85h
	DMA-3		2	04h 47h
	USCI_A/B		2	0Ch 90h
	USCI_A/B		2	04h 90h
	USCI_A/B		2	04h 90h
	USCI_A/B		2	04h 90h
	ADC12_A		2	08h D1h
Interrupts	TB0.CCIFG0		1	64h
	TB0.CCIFG1..6		1	65h
	WDTIFG		1	40h
	USCI_A0		1	90h
	USCI_B0		1	91h
	ADC12_A		1	D0h
	TA0.CCIFG0		1	60h
	TA0.CCIFG1..4		1	61h
	USCI_A2		1	94h
	USCI_B2		1	95h
	DMA		1	46h
	TA1.CCIFG0		1	62h
	TA1.CCIFG1..2		1	63h
	P1		1	50h
	USCI_A1		1	92h
	USCI_B1		1	93h
	USCI_A3		1	96h
	USCI_B3		1	97h
	P2		1	51h
	RTC_A		1	68h
	delimiter		1	00h

Copyright © 2010–2013, Texas Instruments Incorporated

REVISION HISTORY

REVISION	DESCRIPTION
SLAS703	Product Preview release
SLAS703A	Added Applications, Development Tools Support, and Device and Development Tool Nomenclature. Table 2, Added note about pullup resistor to $\overline{\text{RST}}$/NMI/SBWTDIO pin. Table 7, Changed SYSRSTIV interrupt event at 1Ch to Reserved. Recommended Operating Conditions, Added note about interaction between minimum VCC and SVS; Added note about test conditions for typical values. DCO Frequency, Added note (1). 12-Bit ADC, Temperature Sensor and Built-In VMID, Changed ADC12 $t_{SENSOR(sample)}$ MIN to 100 µs; changed note (2). Flash Memory, Changed I_{ERASE} and I_{MERASE}, I_{BANK} limits. Changed SLAU265 references to SLAU319 or SLAU320 as appropriate. Editorial changes throughout.

PACKAGING INFORMATION

Orderable Device	Status [1]	Package Type	Package Drawing	Pins	Package Qty	Eco Plan [2]	Lead/ Ball Finish	MSL Peak Temp [3]	Samples (Requires Login)
MSP430BT5190IPZ	ACTIVE	LQFP	PZ	100	90	Green (RoHS & no Sb/Br)	CU NIPDAU	Level-3-260C-168 HR	
MSP430BT5190IPZR	ACTIVE	LQFP	PZ	100	1000	Green (RoHS & no Sb/Br)	CU NIPDAU	Level-3-260C-168 HR	
MSP430BT5190IZQWR	ACTIVE	BGA MICROSTAR JUNIOR	ZQW	113	2500	Green (RoHS & no Sb/Br)	SNAGCU	Level-3-260C-168 HR	
MSP430BT5190IZQWT	ACTIVE	BGA MICROSTAR JUNIOR	ZQW	113	250	Green (RoHS & no Sb/Br)	SNAGCU	Level-3-260C-168 HR	

[1] The marketing status values are defined as follows:
ACTIVE: Product device recommended for new designs.
LIFEBUY: TI has announced that the device will be discontinued, and a lifetime-buy period is in effect.
NRND: Not recommended for new designs. Device is in production to support existing customers, but TI does not recommend using this part in a new design.
PREVIEW: Device has been announced but is not in production. Samples may or may not be available.
OBSOLETE: TI has discontinued the production of the device.

[2] Eco Plan - The planned eco-friendly classification: Pb-Free (RoHS), Pb-Free (RoHS Exempt), or Green (RoHS & no Sb/Br) - please check http://www.ti.com/productcontent for the latest availability information and additional product content details.
TBD: The Pb-Free/Green conversion plan has not been defined.
Pb-Free (RoHS): TI's terms "Lead-Free" or "Pb-Free" mean semiconductor products that are compatible with the current RoHS requirements for all 6 substances, including the requirement that lead not exceed 0.1% by weight in homogeneous materials. Where designed to be soldered at high temperatures, TI Pb-Free products are suitable for use in specified lead-free processes.
Pb-Free (RoHS Exempt): This component has a RoHS exemption for either 1) lead-based flip-chip solder bumps used between the die and package, or 2) lead-based die adhesive used between the die and leadframe. The component is otherwise considered Pb-Free (RoHS compatible) as defined above.
Green (RoHS & no Sb/Br): TI defines "Green" to mean Pb-Free (RoHS compatible), and free of Bromine (Br) and Antimony (Sb) based flame retardants (Br or Sb do not exceed 0.1% by weight in homogeneous material)

[3] MSL, Peak Temp. -- The Moisture Sensitivity Level rating according to the JEDEC industry standard classifications, and peak solder temperature.

Important Information and Disclaimer: The information provided on this page represents TI's knowledge and belief as of the date that it is provided. TI bases its knowledge and belief on information provided by third parties, and makes no representation or warranty as to the accuracy of such information. Efforts are underway to better integrate information from third parties. TI has taken and continues to take reasonable steps to provide representative and accurate information but may not have conducted destructive testing or chemical analysis on incoming materials and chemicals. TI and TI suppliers consider certain information to be proprietary, and thus CAS numbers and other limited information may not be available for release.

In no event shall TI's liability arising out of such information exceed the total purchase price of the TI part(s) at issue in this document sold by TI to Customer on an annual basis.

TAPE AND REEL INFORMATION

REEL DIMENSIONS

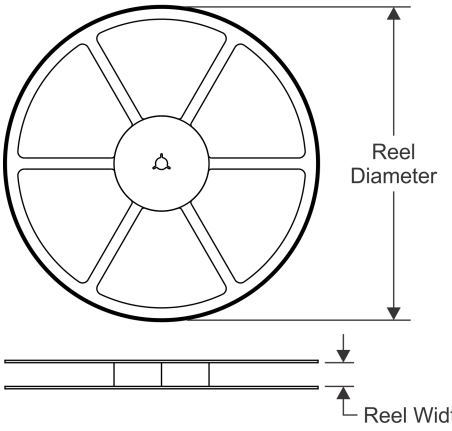

TAPE DIMENSIONS

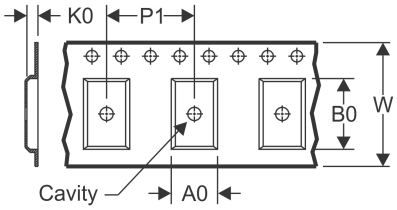

A0	Dimension designed to accommodate the component width
B0	Dimension designed to accommodate the component length
K0	Dimension designed to accommodate the component thickness
W	Overall width of the carrier tape
P1	Pitch between successive cavity centers

QUADRANT ASSIGNMENTS FOR PIN 1 ORIENTATION IN TAPE

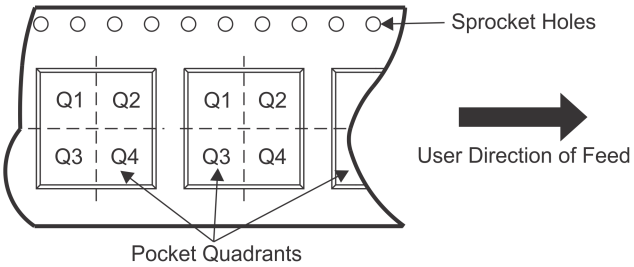

*All dimensions are nominal

Device	Package Type	Package Drawing	Pins	SPQ	Reel Diameter (mm)	Reel Width W1 (mm)	A0 (mm)	B0 (mm)	K0 (mm)	P1 (mm)	W (mm)	Pin1 Quadrant
MSP430BT5190IPZR	LQFP	PZ	100	1000	330.0	24.4	17.0	17.0	2.1	20.0	24.0	Q2
MSP430BT5190IZQWR	BGA MICROSTAR JUNIOR	ZQW	113	2500	330.0	16.4	7.3	7.3	1.5	12.0	16.0	Q1
MSP430BT5190IZQWT	BGA MICROSTAR JUNIOR	ZQW	113	250	330.0	16.4	7.3	7.3	1.5	12.0	16.0	Q1

TAPE AND REEL BOX DIMENSIONS

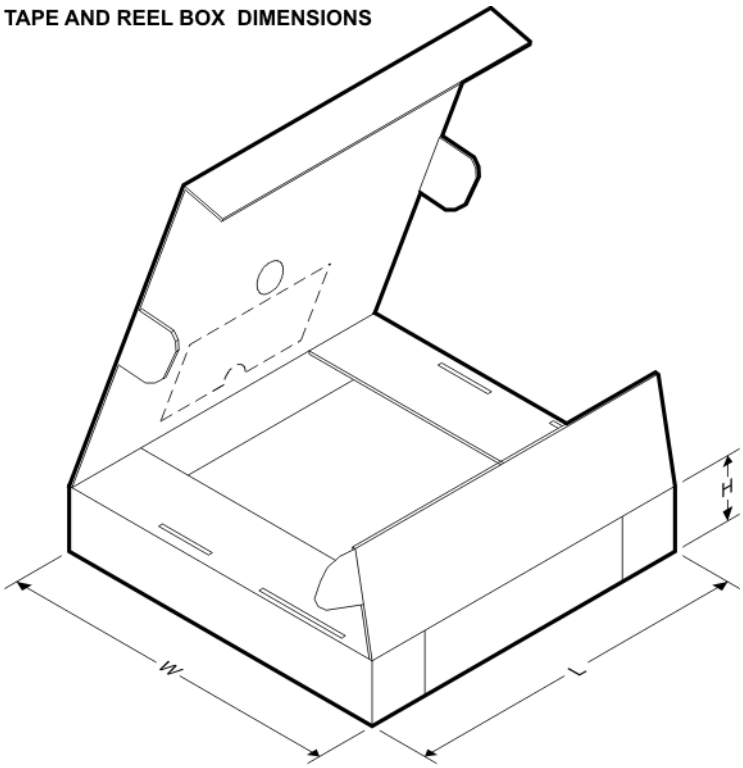

*All dimensions are nominal

Device	Package Type	Package Drawing	Pins	SPQ	Length (mm)	Width (mm)	Height (mm)
MSP430BT5190IPZR	LQFP	PZ	100	1000	367.0	367.0	45.0
MSP430BT5190IZQWR	BGA MICROSTAR JUNIOR	ZQW	113	2500	336.6	336.6	28.6
MSP430BT5190IZQWT	BGA MICROSTAR JUNIOR	ZQW	113	250	336.6	336.6	28.6

ZQW (S–PBGA–N113) PLASTIC BALL GRID ARRAY

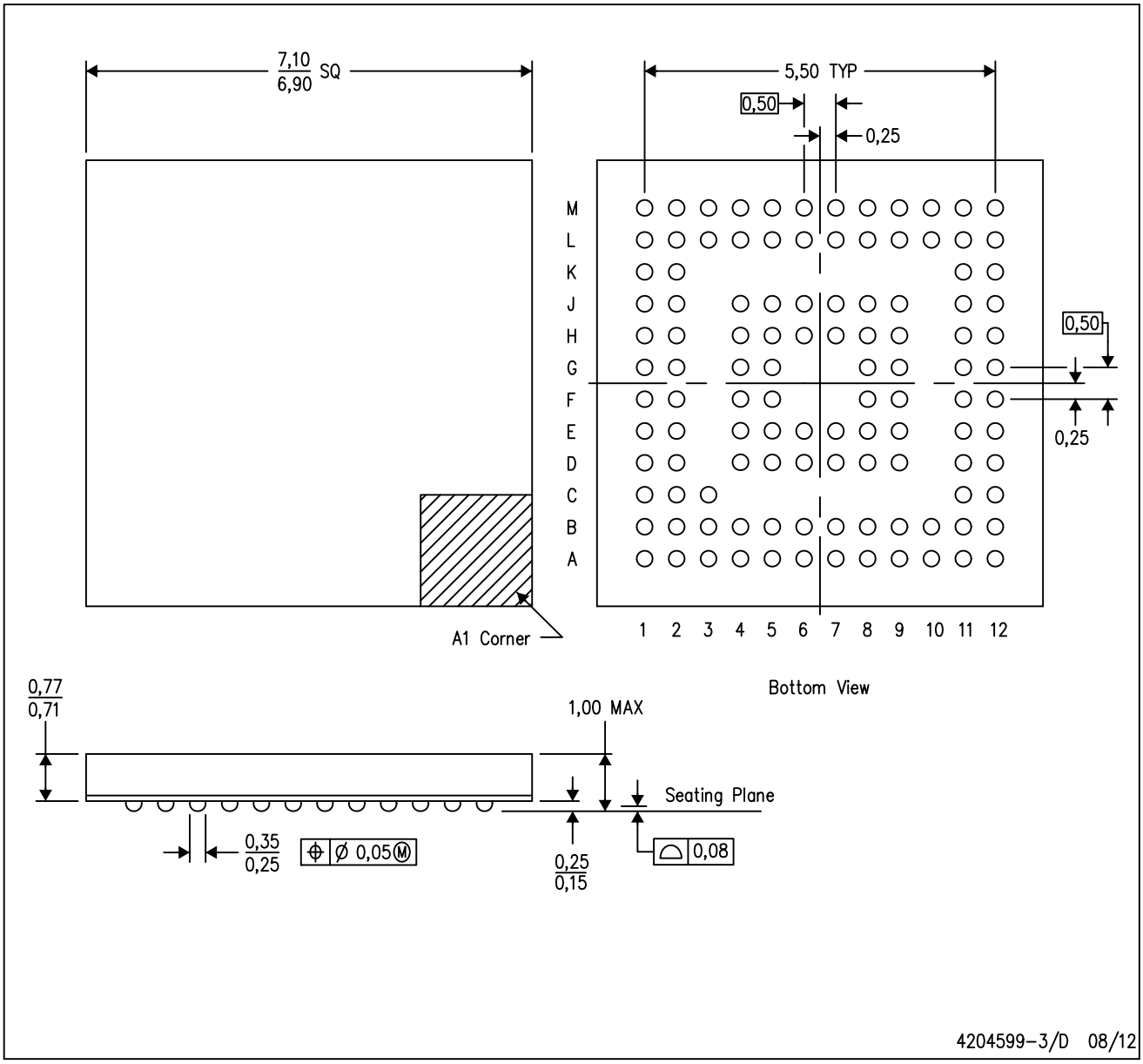

NOTES:
A. All linear dimensions are in millimeters.
B. This drawing is subject to change without notice.
C. Falls within JEDEC MO–225
D. This is a Pb–free solder ball design.

MicroStar Junior is a trademark of Texas Instruments.

PZ (S-PQFP-G100) **PLASTIC QUAD FLATPACK**

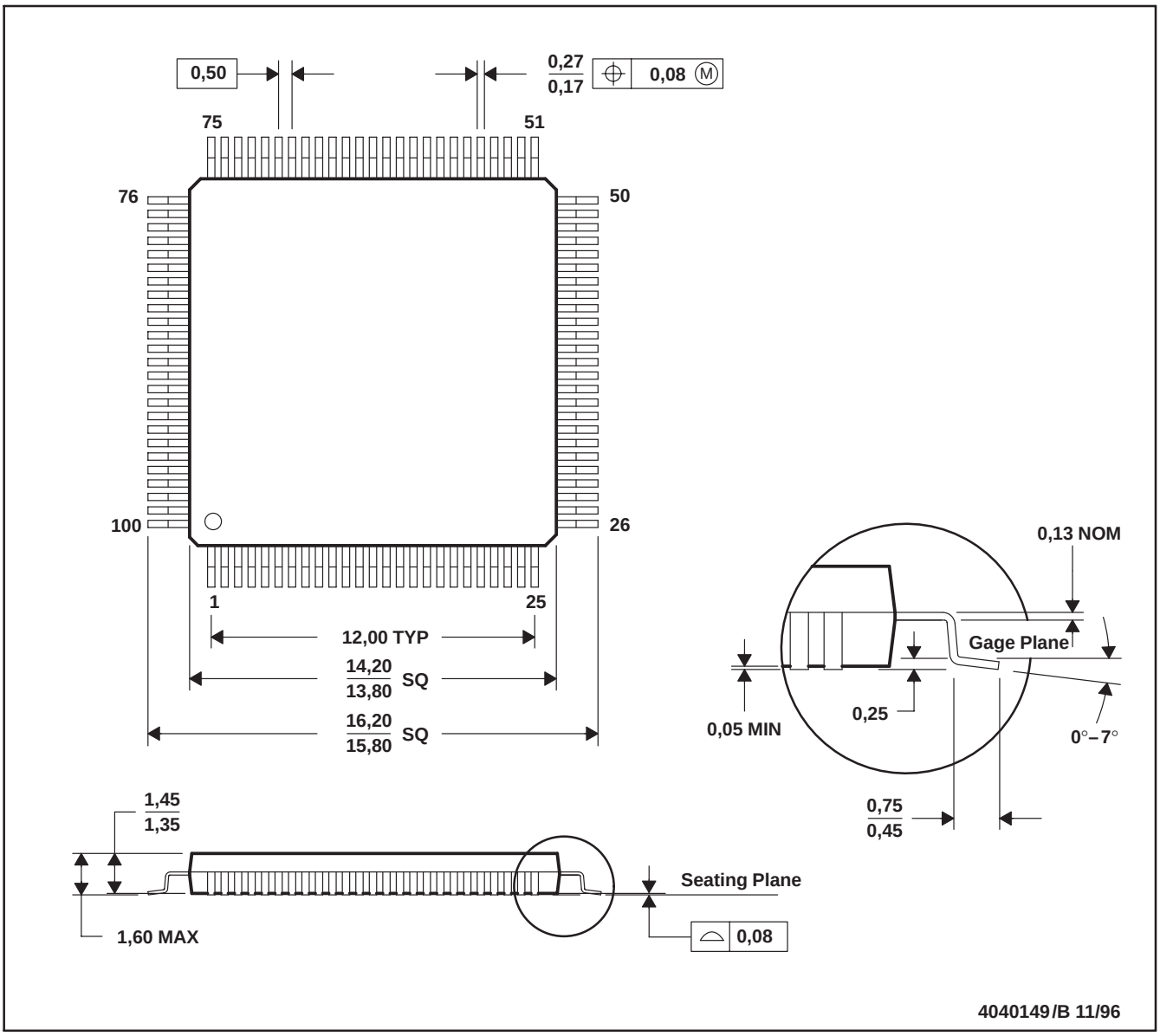

NOTES: A. All linear dimensions are in millimeters.
B. This drawing is subject to change without notice.
C. Falls within JEDEC MS-026

IMPORTANT NOTICE

Texas Instruments Incorporated and its subsidiaries (TI) reserve the right to make corrections, enhancements, improvements and other changes to its semiconductor products and services per JESD46, latest issue, and to discontinue any product or service per JESD48, latest issue. Buyers should obtain the latest relevant information before placing orders and should verify that such information is current and complete. All semiconductor products (also referred to herein as “components”) are sold subject to TI’s terms and conditions of sale supplied at the time of order acknowledgment.

TI warrants performance of its components to the specifications applicable at the time of sale, in accordance with the warranty in TI’s terms and conditions of sale of semiconductor products. Testing and other quality control techniques are used to the extent TI deems necessary to support this warranty. Except where mandated by applicable law, testing of all parameters of each component is not necessarily performed.

TI assumes no liability for applications assistance or the design of Buyers’ products. Buyers are responsible for their products and applications using TI components. To minimize the risks associated with Buyers’ products and applications, Buyers should provide adequate design and operating safeguards.

TI does not warrant or represent that any license, either express or implied, is granted under any patent right, copyright, mask work right, or other intellectual property right relating to any combination, machine, or process in which TI components or services are used. Information published by TI regarding third-party products or services does not constitute a license to use such products or services or a warranty or endorsement thereof. Use of such information may require a license from a third party under the patents or other intellectual property of the third party, or a license from TI under the patents or other intellectual property of TI.

Reproduction of significant portions of TI information in TI data books or data sheets is permissible only if reproduction is without alteration and is accompanied by all associated warranties, conditions, limitations, and notices. TI is not responsible or liable for such altered documentation. Information of third parties may be subject to additional restrictions.

Resale of TI components or services with statements different from or beyond the parameters stated by TI for that component or service voids all express and any implied warranties for the associated TI component or service and is an unfair and deceptive business practice. TI is not responsible or liable for any such statements.

Buyer acknowledges and agrees that it is solely responsible for compliance with all legal, regulatory and safety-related requirements concerning its products, and any use of TI components in its applications, notwithstanding any applications-related information or support that may be provided by TI. Buyer represents and agrees that it has all the necessary expertise to create and implement safeguards which anticipate dangerous consequences of failures, monitor failures and their consequences, lessen the likelihood of failures that might cause harm and take appropriate remedial actions. Buyer will fully indemnify TI and its representatives against any damages arising out of the use of any TI components in safety-critical applications.

In some cases, TI components may be promoted specifically to facilitate safety-related applications. With such components, TI’s goal is to help enable customers to design and create their own end-product solutions that meet applicable functional safety standards and requirements. Nonetheless, such components are subject to these terms.

No TI components are authorized for use in FDA Class III (or similar life-critical medical equipment) unless authorized officers of the parties have executed a special agreement specifically governing such use.

Only those TI components which TI has specifically designated as military grade or “enhanced plastic” are designed and intended for use in military/aerospace applications or environments. Buyer acknowledges and agrees that any military or aerospace use of TI components which have ***not*** been so designated is solely at the Buyer's risk, and that Buyer is solely responsible for compliance with all legal and regulatory requirements in connection with such use.

TI has specifically designated certain components as meeting ISO/TS16949 requirements, mainly for automotive use. In any case of use of non-designated products, TI will not be responsible for any failure to meet ISO/TS16949.

Products		**Applications**	
Audio	www.ti.com/audio	Automotive and Transportation	www.ti.com/automotive
Amplifiers	amplifier.ti.com	Communications and Telecom	www.ti.com/communications
Data Converters	dataconverter.ti.com	Computers and Peripherals	www.ti.com/computers
DLP® Products	www.dlp.com	Consumer Electronics	www.ti.com/consumer-apps
DSP	dsp.ti.com	Energy and Lighting	www.ti.com/energy
Clocks and Timers	www.ti.com/clocks	Industrial	www.ti.com/industrial
Interface	interface.ti.com	Medical	www.ti.com/medical
Logic	logic.ti.com	Security	www.ti.com/security
Power Mgmt	power.ti.com	Space, Avionics and Defense	www.ti.com/space-avionics-defense
Microcontrollers	microcontroller.ti.com	Video and Imaging	www.ti.com/video
RFID	www.ti-rfid.com		
OMAP Applications Processors	www.ti.com/omap	**TI E2E Community**	e2e.ti.com
Wireless Connectivity	www.ti.com/wirelessconnectivity		

Mailing Address: Texas Instruments, Post Office Box 655303, Dallas, Texas 75265
Copyright © 2013, Texas Instruments Incorporated

AMEYA360
Components Supply Platform

Authorized Distribution Brand :

Website :

Welcome to visit www.ameya360.com

Contact Us :

- ## Address :

401 Building No.5, JiuGe Business Center, Lane 2301, Yishan Rd
Minhang District, Shanghai , China

- ## Sales :

Direct +86 (21) 6401-6692

Email amall@ameya360.com

QQ 800077892

Skype ameyasales1 ameyasales2

- ## Customer Service :

Email service@ameya360.com

- ## Partnership :

Tel +86 (21) 64016692-8333

Email mkt@ameya360.com