ITEM	Q'TY	PART NUMBER	PART DESCRIPTION
1	1	FLPV-XX	Flexible Light Pipe Adapter,Vertical, w/LED
2	1	FLP5-XX.X	Flexible Light-Pipe Lens Cap Assembly, 7mm Round

REV.	DESCRIPTION	DATE	APPROVED
A	Engineering Release.	07/14/08	M. C.
B	3UWC-0.6K-F Changed to 3UWC1.035C-F	04/03/12	T. Y.
C	Updated Table For Length "L"	11/16/12	T. Y.

NOTE: FLPV-XXX ADAPTER SHIPPED NON-ASSEMBLED

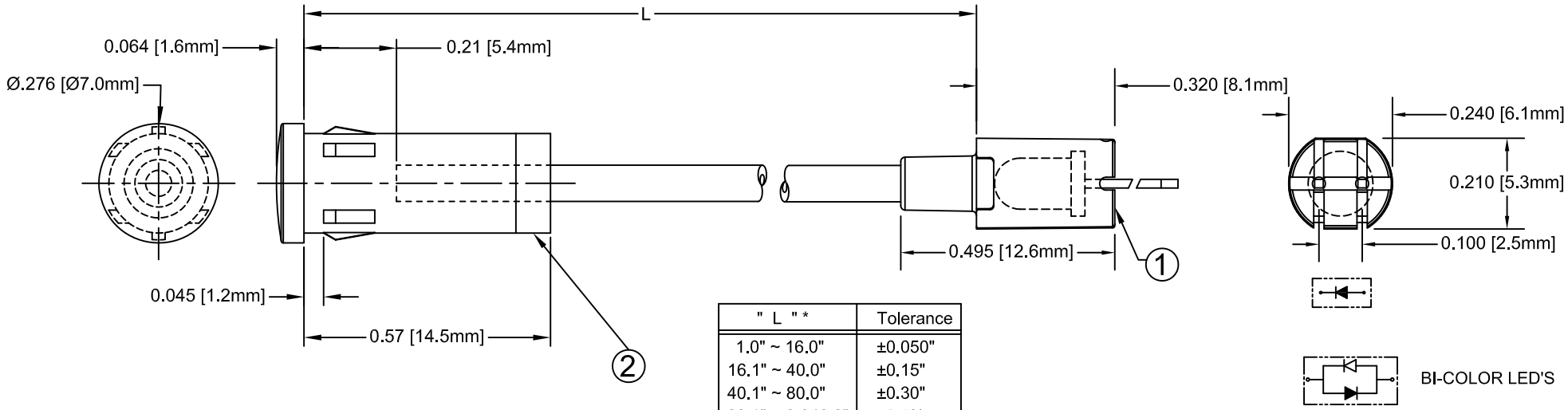

" L " *	Tolerance
1.0" ~ 16.0"	±0.050"
16.1" ~ 40.0"	±0.15"
40.1" ~ 80.0"	±0.30"
80.1" ~ 3,940.0"	±0.5%

* Available in 0.1" increments only

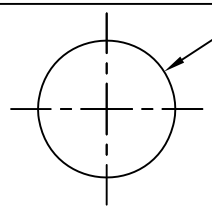

Recommended Mounting Holes
(Panel Thickness = 0.100")

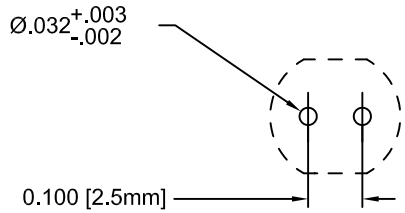

RECOMMENDED FOOTPRINT

SHORT LEAD CATHODE	LED PART NO.	LONG LEAD CATHODE
RED	3xBCC-F	GREEN
YELLOW	3xBCC-Y/G-F	GREEN
RED	3xBCC-R/Y-F	YELLOW
AMBER	3xBCC-A/G-F	GREEN

ABSOLUTE MAXIMUM RATINGS (Ta=25°C)

REVERSE VOLTAGE	5V
REVERSE CURRENT	100uA
OPERATING TEMPERATURE RANGE	−25° C – 85° C
STORAGE TEMPERATURE	−30° C – 100° C
LEAD SOLDERING TEMPERATURE(1/16" FROM BODY)	260° C FOR 5 SECONDS

STANDARD TOLERANCE
(UNLESS OTHERWISE SPECIFIED)

DECIMALS		ANGULAR	
.X	± .1	X°	± 1°
.XX	± .02		
.XXX	± .010		

BIVAR®
4 THOMAS, IRVINE, CA. 92618
TEL: (949) 951-8808 FAX: (949) 951-3974

TITLE: FLEXIBLE LIGHT-PIPE ASSY VERTICAL, 7mm LENS CAP W/LED

DESIGNED:	DATE:	PART NO:	REVISION:
Raffy Paje	07/14/08	FLP5VX.X-XX	C
CHECKED: T. Yin	DATE: 07/14/08	CAGE CODE : 32559	SHEET # 1 OF 3

CAD GENERATED DOCUMENT, DO NOT MEASURE DRAWING.

REV.	DESCRIPTION	DATE	APPROVED
	SEE SHEET #1		

FLP5VX.X-XX Part No.	LED Part No.	Chip			Lens Appearance	Absolute Max. Ratings				Electro-Optical Data @ 20mA			Viewing Angle 2 Θ ½ (Deg)
		Material	Peak Wave Length λp(nm)	Emitted Color		Δλ (nm)	Pd (mW)	If (mA)	Peak If(mA)	Vf (V) TYP	Vf (V) MAX	Iv (mcd) TYP	
FLP5VX.X-SG	3SGC-F	GaP/GaP	568	SUPER GREEN	WATER CLEAR	30	80	30	150	2.1	2.8	50	20
FLP5VX.X-SY	3SYC-F	GaAsP/GaP	590	SUPER YELLOW	WATER CLEAR	35	85	30	150	2.0	2.8	50	20
FLP5VX.X-SA	3SAC-F	AlGaInP	605	SUPER AMBER	WATER CLEAR	17	100	30	150	1.8	2.4	300	20
FLP5VX.X-SR	3SRC-F	GaAlAs/GaAs	645	SUPER RED	WATER CLEAR	20	70	30	150	1.7	2.4	60	20

FLP5VX.X-XX PART NO.	LED Part No.	Chip			Lens Appearance	Absolute Max. Ratings				Electro-Optical Data @ 20mA			Viewing Angle 2 Θ ½ (Deg)
		Material	Peak Wave Length λp(nm)	Emitted Color		Δλ (nm)	Pd (mW)	If (mA)	Peak If(mA)	Vf (V) Typ.	Vf (V) Max.	Iv (mcd) Typ.	
FLP5VX.X-UBW.6K	3UBWC-0.6K-F	GaN/SiC	470	BLUE	WATER CLEAR	65	150	25	70	4.0	4.5	400	20
FLP5VX.X-UT	3UTC-F	GaN/SiC	500	TURQUOISE	WATER CLEAR	30	70	30	150	3.5	4.0	800	20
FLP5VX.X-UG	3UGC-F	AlGaInP	570	GREEN	WATER CLEAR	30	100	30	150	2.1	2.4	200	20
FLP5VX.X-SUG	3SUGC-F	AlGaInP	570	GREEN	WATER CLEAR	30	100	30	150	2.1	2.4	300	20
FLP5VX.X-UY	3UYC-F	AlGaInP	590	YELLOW	WATER CLEAR	35	85	30	150	2.0	2.4	300	20
FLP5VX.X-SUY	3SUYC-F	AlGaInP	590	YELLOW	WATER CLEAR	35	85	30	150	2.0	2.4	400	20
FLP5VX.X-UUY	3UUYC-F	AlGaInP	590	YELLOW	WATER CLEAR	35	85	30	150	2.0	2.4	600	20
FLP5VX.X-UO	3UOC-F	AlGaInP	625	ORANGE	WATER CLEAR	20	100	30	150	1.8	2.4	300	20
FLP5VX.X-SUO	3SUOC-F	AlGaInP	625	ORANGE	WATER CLEAR	20	100	30	150	1.8	2.4	400	20
FLP5VX.X-UR	3URC-F	GaAlAs/GaAs	645	RED	WATER CLEAR	20	60	30	150	1.7	2.4	200	20
FLP5VX.X-SUR	3SURC-F	AlGaInP	640	RED	WATER CLEAR	20	70	30	150	1.8	2.4	200	20
FLP5VX.X-UW.6K	3UWC1.035C-F	InGaN/Sapphire	X=.30 Y=.31	WHITE	WATER CLEAR	-	70	30	100	3.4	3.8	1000	35

STANDARD TOLERANCE
(UNLESS OTHERWISE SPECIFIED)
DECIMALS ANGULAR

BIVAR®
4 THOMAS, IRVINE, CA. 92618
TEL: (949) 951-8808 FAX: (949) 951-3974

TITLE: FLEXIBLE LIGHT-PIPE ASSY VERTICAL, 7mm LENS CAP W/LED

DESIGNED:	DATE:	PART NO:	REVISION:
Raffy Paje	07/14/08	FLP5VX.X-XX	C
CHECKED: T. Yin	DATE: 07/14/08	CAGE CODE : 32559	SHEET # 2 OF 3

CAD GENERATED DOCUMENT, DO NOT MEASURE DRAWING.

REV.	DESCRIPTION	DATE	APPROVED
	SEE SHEET #1		

FLP5VX.X-XX Part No.	LED Part No.	Chip			Lens Appearance	Absolute Max. Ratings				Electro-Optical Data @ 20mA			Viewing Angle 2 Θ ½ (Deg)
		Material	Peak Wave Length λp(nm)	Emitted Color		Δλ (nm)	Pd (mW)	If (mA)	Peak If(mA)	Vf (V) TYP	Vf (V) MAX	Iv (mcd) TYP	
FLP5VX.X-BC	3BCC-F	GaAsP/GaP	625	HE RED	WATER CLEAR	35	80	30	150	2.0	2.8	8.0	40
		GaP/GaP	568	GREEN		30	80	30	150	2.1	2.8	8.0	
FLP5VX.X-BC-Y/G	3BCC-Y/G-F	GaAsP/GaP	590	YELLOW	WATER CLEAR	35	80	30	150	2.0	2.8	6.0	40
		GaP/GaP	568	GREEN		30	80	30	150	2.1	2.8	8.0	
FLP5VX.X-BC-R/Y	3BCC-R/Y-F	GaAsP/GaP	590	YELLOW	WATER CLEAR	35	80	30	150	2.0	2.8	6.0	40
		GaAsP/GaP	625	HE RED		30	80	30	150	2.0	2.8	8.0	
FLP5VX.X-BC-A/G	3BCC-A/G-F	GaAsP/GaP	605	AMBER	WATER CLEAR	35	80	30	150	2.0	2.8	6.0	40
		GaP/GaP	568	GREEN		30	80	30	150	2.0	2.8	8.0	
FLP5VX.X-SBC	3SBCC-F	GaAlAs/GaAs	645	SUPER RED	WATER CLEAR	20	70	30	150	1.7	2.4	100	20
		GaP/GaP	568	HE GREEN		30	80	30	150	2.1	2.8	60	
FLP5VX.X-SBC-Y/G	3SBCC-Y/G-F	AlGaInP	590	SUPER YELLOW	WATER CLEAR	35	85	30	150	2.0	2.4	20	20
		GaP/GaP	568	HE GREEN		30	80	30	150	2.1	2.8	15	
FLP5VX.X-SBC-R/Y	3SBCC-R/Y-F	GaAiAs/GaAs	645	SUPER RED	WATER CLEAR	20	70	30	150	1.7	2.4	100	20
		AlGaInP	590	SUPER YELLOW		35	85	30	150	2.0	2.4	300	

STANDARD TOLERANCE
(UNLESS OTHERWISE SPECIFIED)
DECIMALS ANGULAR

BIVAR®
4 THOMAS, IRVINE, CA. 92618
TEL: (949) 951-8808 FAX: (949) 951-3974

TITLE: FLEXIBLE LIGHT-PIPE ASSY VERTICAL, 7mm LENS CAP W/LED

DESIGNED:	DATE:	PART NO:	REVISION:
Raffy Paje	07/14/08	FLP5VX.X-XX	C
CHECKED: T. Yin	DATE: 07/14/08	CAGE CODE : 32559	SHEET # 3 OF 3

CAD GENERATED DOCUMENT, DO NOT MEASURE DRAWING.

AMEYA360
Components Supply Platform

Authorized Distribution Brand :

Website :

Welcome to visit www.ameya360.com

Contact Us :

- ## Address :

401 Building No.5, JiuGe Business Center, Lane 2301, Yishan Rd
Minhang District, Shanghai , China

- ## Sales :

Direct +86 (21) 6401-6692

Email amall@ameya360.com

QQ 800077892

Skype ameyasales1 ameyasales2

- ## Customer Service :

Email service@ameya360.com

- ## Partnership :

Tel +86 (21) 64016692-8333

Email mkt@ameya360.com